INDEX

By Section

***Click on the desired Installation Guide to jump to the Guide page.**

Product Name	Product Code	Guide No.	Last Updated
INSTALLATION SUPPORT DOCUMENTS			
Typical Installation Sequence			**Sep 2018**
NAVIGATE			
FRAMES AND WORKSURFACE			
Navigate Frame	HNBFNA	121	**Sept 2026**
Navigate Frame Link	HNBFNF		
Navigate Rectangular Worksurface	HNBWRN		
Navigate Systems Link	HNBFNS	122	**May 2019**
Navigate 120 Frame	HNBFNT	123	**Sept 2026**
Navigate 120 Worksurface	HNBWTN		
Navigate Single-Sided Frame	HNBFNZ	124	**Sep 2026**
Navigate Single-Sided Rectangular Extended Worksurface	HNBWES		
Navigate Single-Sided Rectangular Worksurface	HNBWRS		
SCREENS AND GABLES			
Navigate Desk Edge Screen - Glass	HNBCDG	221a	**May 2019**
Navigate Desk Edge Screen - Solid	HNBCDS	221b	**May 2019**
Navigate Desk Edge Screen - Fabric	HNBCDF	221c	**May 2019**
Navigate Fixed Center Screen - Glass	HNBCFG	222a	**Sep 2019**
Navigate Fixed Center Screen - Solid	HNBCFS	222b	**Sep 2019**
Navigate Fixed Center Screen - Fabric	HNBCFF	222c	**Sep 2019**
Navigate Cable Channel	HNBFCN	223a	**Feb 2022**
Navigate End Gable - Metal	HNBCGEMN		
Navigate Mid Gable - Metal	HNBCGMMN		
Navigate Cable Channel	HNBFCN	223b	**Feb 2022**
Navigate Mid Gable - Solid	HNBCGMSN		
Navigate End Gable - Solid	HNBCGESN		
Navigate End Cover - Metal	HNBCCEMN	223c	**May 2019**
Navigate Mid Cover - Metal	HNBCCMMN		
Navigate End Screen Cover - Metal	HNBCCSMN	223d	**Aug 2019**
Navigate End of Run Screen - Fabric	HNBTEF		

Product Name	Product Code	Guide No.	Last Updated
SCREENS AND GABLES			
Navigate End Screen Gable - Metal	HNBCGSMN	223e	**Sep 2019**
Navigate End of Run Screen - Fabric	HNBTEF		
Navigate Wire Channel - Single Sided	HNBFCNS	223f	**Sep 2024**
Navigate Single-Sided Corridor Screen - Fabric	HNBLSF	224	**Sep 2019**
Navigate Single-Sided Corridor Screen - Solid	HNBLSS		
Navigate 120 Mid Cover	HNBCCMMT	224a	**May 2019**
Navigate 120 Mid Gable Solid	HNBCGMST	224b	**Sep 2025**
Navigate 120 Mid Gable, Metal	HNBCGMMT	224c	**Sep 2025**
Navigate Single-Sided End Cover - Metal	HNBCCEMS	225a	**Sep 2019**
Navigate Single-Sided Mid Cover - Metal			
Navigate Single-Sided End Screen Cover - Metal	HNBCCSMS	225b	**Sep 2019**
Navigate Single-Sided End of Run Screen - Fabric	HNBTSF		
Navigate Single-Sided End Screen Gable - Metal	HNBCGSMS	225c	**Sep 2019**
Navigate Single-Sided End of Run Screen - Solid	HNBTSS		
Navigate Single-Sided End Gable - Metal	HNBCGEMS	225d	**Sep 2019**
Navigate Single-Sided Mid Gable - Metal	HNBCGMMS		
Navigate Single-Sided End Gable - Solid	HNBCGESS	225e	**Sep 2019**
Navigate Single-Sided Mid Gable - Solid	HNBCGMSS		
Navigate Single-Sided Transition Mid Gable - Metal	HNBCGMMR	225f	**Sep 2019**
Navigate Single-Sided Transition Mid Gable - Solid	HNBCGMSR	225g	**Sep 2019**
Navigate End of Run Screen - Solid	HNBTES	225h	**Sep 2024**
Navigate Single Sided Solid Screen Connection Bracket	HNBLBS	226	**Sep 2020**

Product Name	Product Code	Guide No.	Last Updated
ELECTRICS			
Navigate Power Harness	HNBEPH	321a	**Sep 2019**
Navigate Power Module	HNBEPM		
Navigate Receptacle Outlet	HNBERO		
Navigate I-Connector	HNBEIC		
Navigate Chicago Power Module	HNBEPMCH	321b	**May 2026**
Navigate Single-Sided Chicago Power Module	HNBEPSCH		
Navigate Base Feed	HNBEBF	321c	**May 2022**
Navigate Base Feed Cover	HNBEBC		
Navigate Chicago Base Feed	HNBEBFCH		
Navigate Split Base Feed	HNBEBFS		
Navigate Ceiling Feed	HNBECF	322a	**May 2026**
Navigate Chicago Ceiling Feed	HNBECFCH		
Navigate Power Pole - End	HNBEPP		
Navigate Ceiling Feed	HNBECF	322b	**May 2026**
Navigate Chicago Ceiling Feed	HNBECFCH		
Navigate Power Pole - Mid	HNBEPP		
Navigate Power Pole(Single Sided Bench)	HNBEPP		
Navigate Power Conservation System	HNBEPC	323	**Sep 2024**
Navigate Power Pole 120	HNBEPPT	324	**Sep 2024**
Navigate Ceiling Feed	HNBECF		
Center Electrical Grommet	HNBECEG	325	**Sep 2019**
Navigate E-Chain Vertical Cable Manager	HNBEEE	326	**Sep 2023**

Navigate Double-Sided HA Frame (HNBFNA), Frame Link (HNBFNF) and Navigate Rectangular Worksurface (HNBWRN)

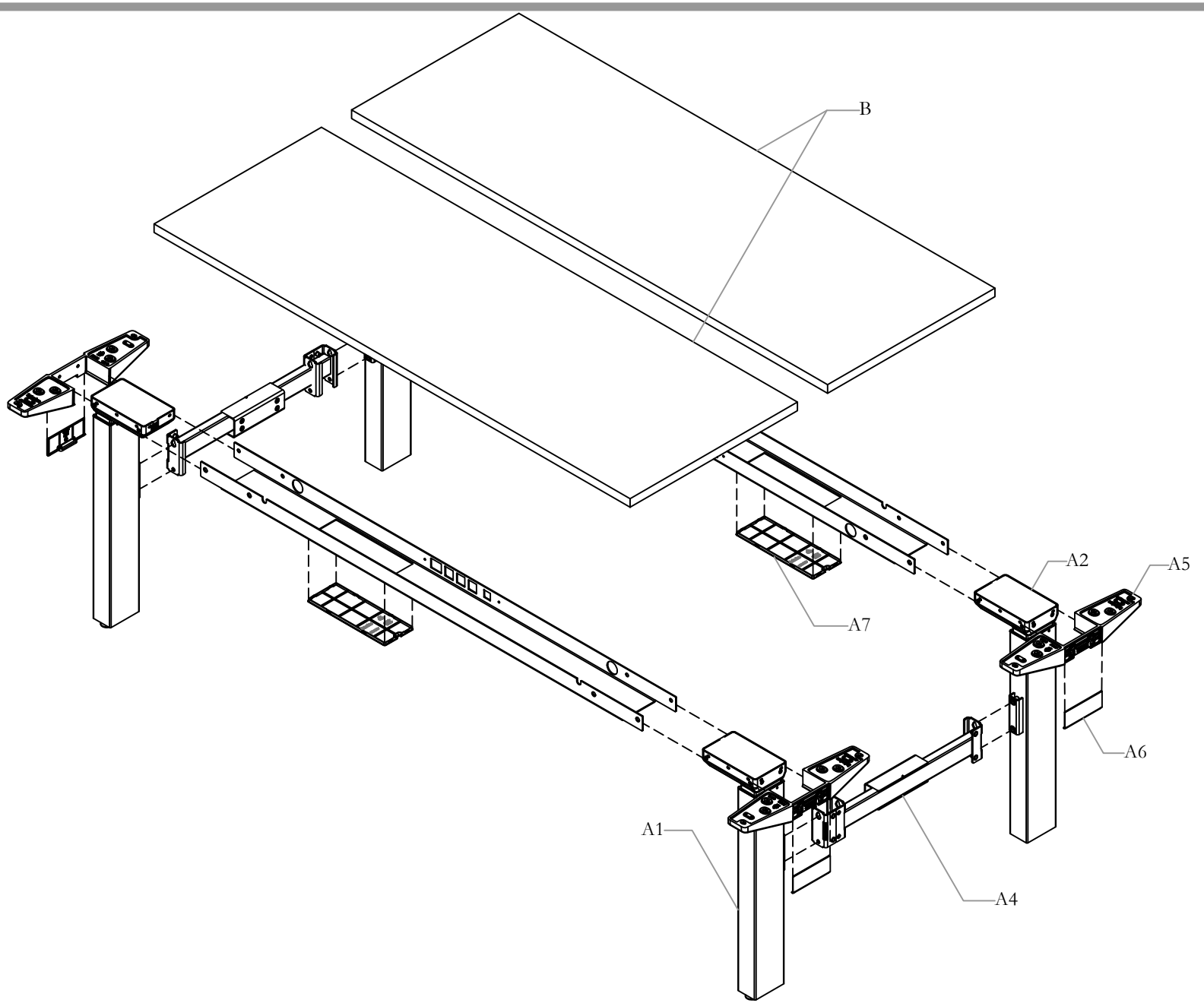

Part and Product Identification

A - Navigate Standard Range Electric Frame (HNBFNA)x1

Frame Assembly (N09-8679)x1

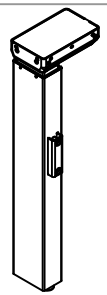

A1 - Navigate HAB Leg Assy (N09-8583L)x2

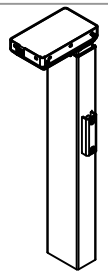

A2 - Navigate HAB Leg Assy (N09-8583R)x2

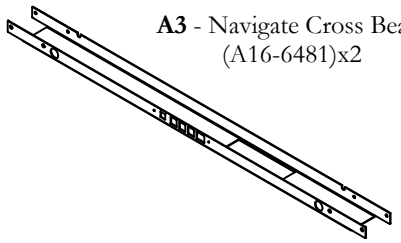

A3 - Navigate Cross Beam (A16-6481)x2

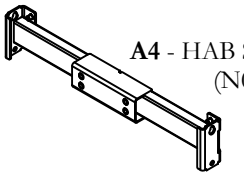

A4 - HAB Stretcher Assembly (N09-5870)x2

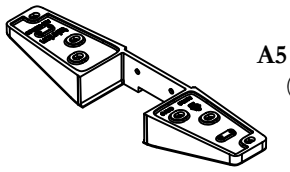

A5 - Navigate Strut (A25-0630)x4



A6 - Navigate Strut Cover (A25-0631)x4

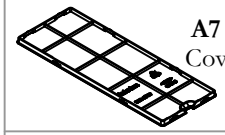

A7 - Navigate Strut Cover (A25-0631)x4

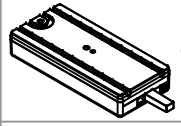

A8 - Navigate Strut Cover (N09-8185)x2

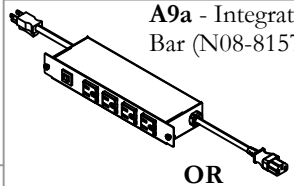

A9a - Integrated Power Bar (N08-8157)x1

OR

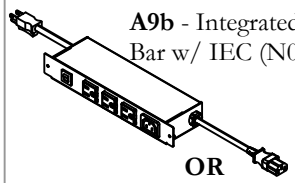

A9b - Integrated Power Bar w/ IEC (N09-8737)x1

OR

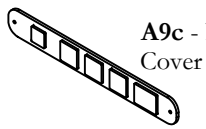

A9c - Power Bar Hole Cover (B02-0736)x1

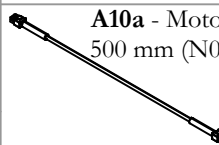

A10a - Motor Cable PVC - 500 mm (N09-8402\05)x2

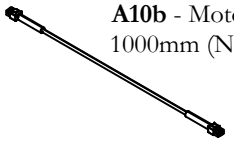

A10b - Motor Cable PVC - 1000mm (N09-8402\10)x2

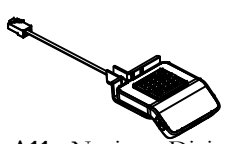

A11 - Navigate Digital Switch (N09-8183)x1

OR

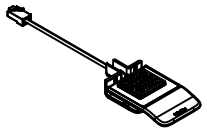

A12 - Navigate Simple Switch (N09-8192)x1

OR

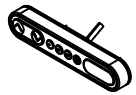

A13 - Display Switch w/ Up/Down Memory (N09-5600)x1

A14 - Hardware Kit (X05-0478)x1

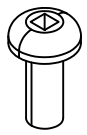

A14a - Screw 1/4-20x5/8, QD MCHN (E01-0992)x12



A14b - M6x1, 14mm Flat Head Screw (E01-1249)x16

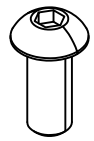

A14c -Machine Screw 5/16-18 x 3/4, Socket Screw (E01-1035)x4

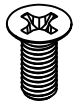

A14d - M5x0.8-10, Flat Head Screw (E01-0989) x4



A14e - 3/16" ire Clamp (B02-0598)x4

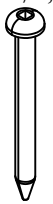

A14f -#10 Pan Quad Screw (E01-1009)x2

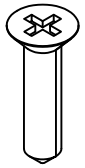

A14g - Flat Quad Wd Screw (E04-0090) x9

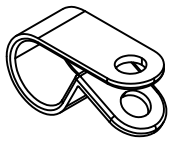

A14h - Cable Clamp 3/8" (B02-0558) x5

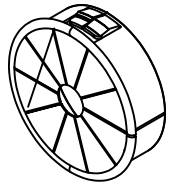

A14i - Grommet Bushing (B02-0557) x2

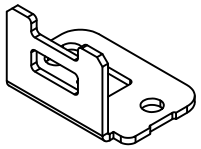

A14j - Linak Memory 90 Deg Mounting Brkt (A16-3970) x1

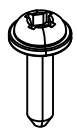

A14k - Wd Screw Pan Quad #8x5/8" (E04-0091) x2



A14l - #8x1 1/4" Wd Screw (E04-0074) x2

Part and Product Identification

A - Navigate Standard Range Electric Frame (HNBFNA)x1

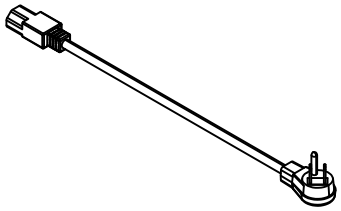

A15 - Power Supply (I04-0100)x2

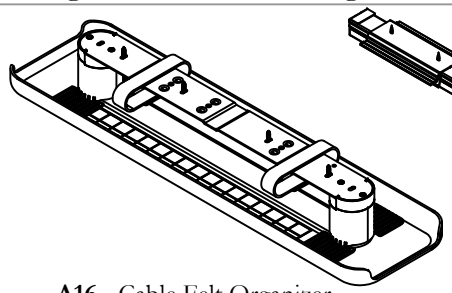

A16 - Cable Felt Organizer (YEYA)x1

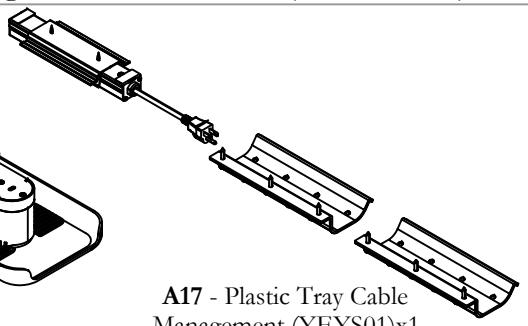

A17 - Plastic Tray Cable Management (YEYS01)x1

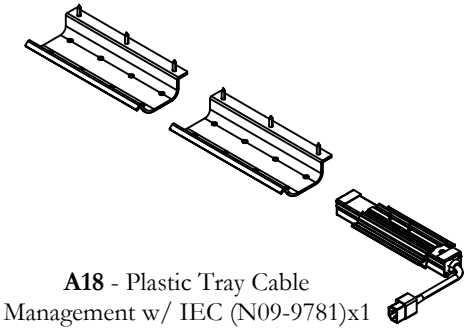

A18 - Plastic Tray Cable Management w/ IEC (N09-9781)x1

B - Navigate Rectangular Worksurface HAB (HNBWRN)x1

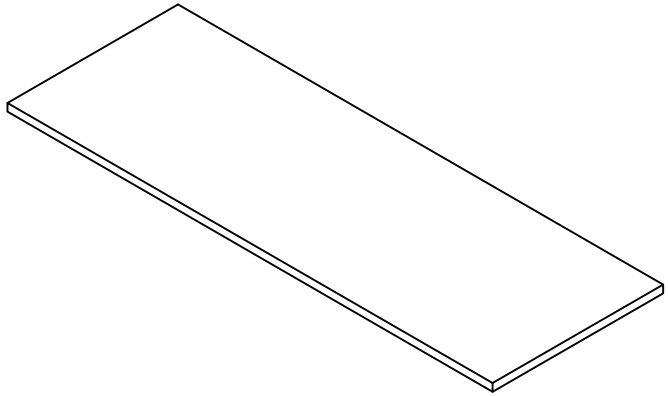

C - Navigate Frame Link HAB (HNBFNF)x1

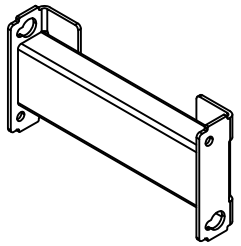

C1 - Frame Link Weldment (N09-5913)x1

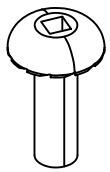

C2 - 1/4-20x3/4, Truss Quad Screw (E01-1010)x8

INSTALL HEIGHT-ADJUSTABLE LEGS

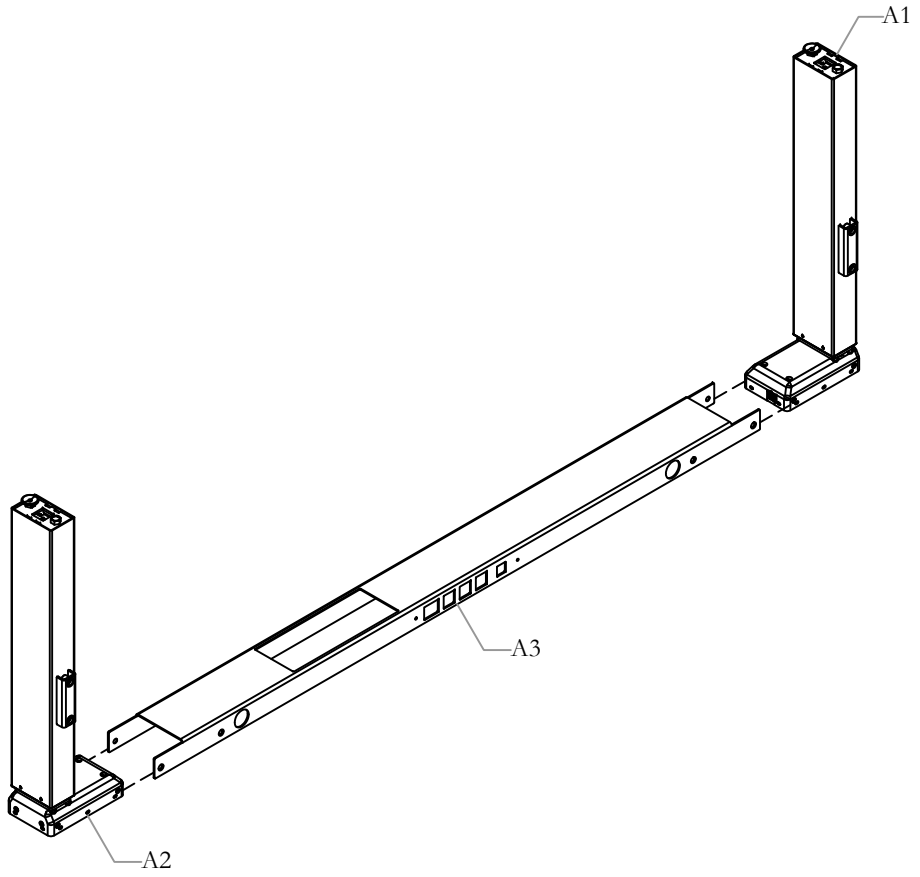

STEP 1: Slide Height-Adjustable legs into the cross beam as shown above.

FASTEN SCREWS TO SECURE LEGS

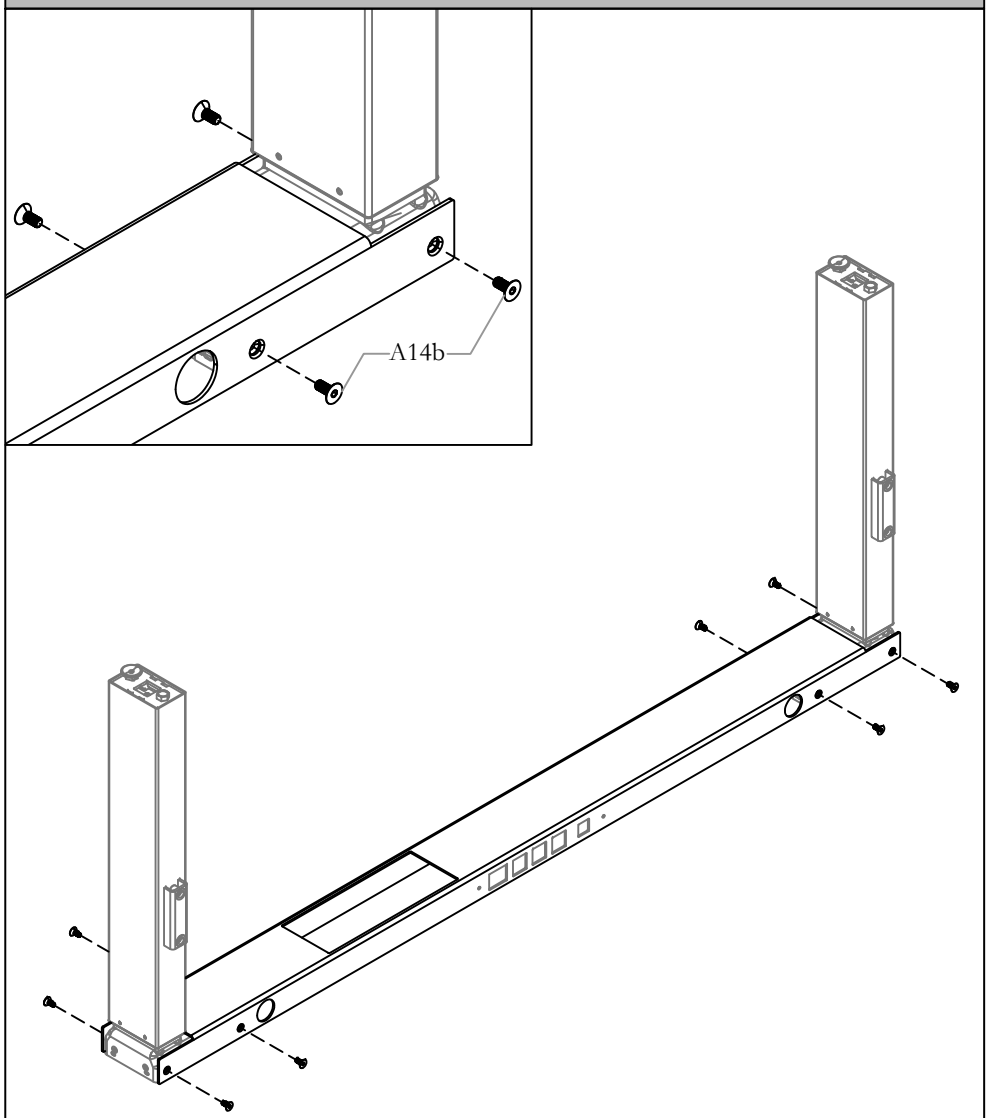

STEP 2: Fasten screws to secure legs to Top Channel.

REPEAT STEP 1 & STEP 2

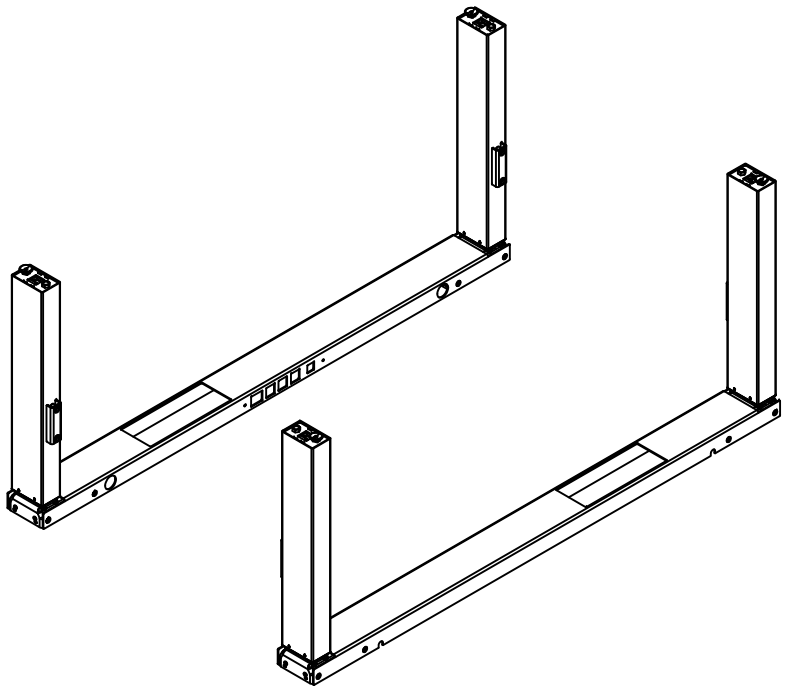

STEP 3: Repeat Step 1 to Step 2, for the other leg assembly.

ATTACH STRETCHER BAR TO LEGS

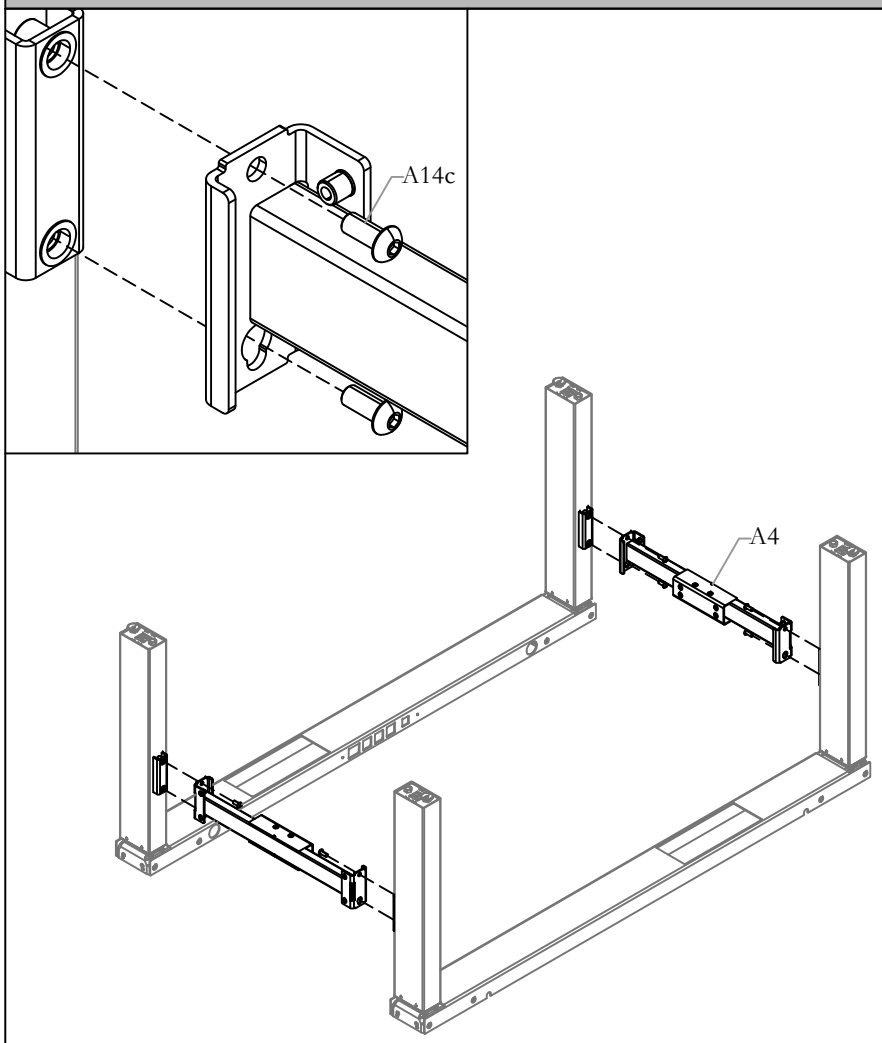

STEP 4: Attach Stretcher Bar to legs as shown above, with screws provided.

ATTACH STRUTS TO ALL LEG ASSEMBLIES

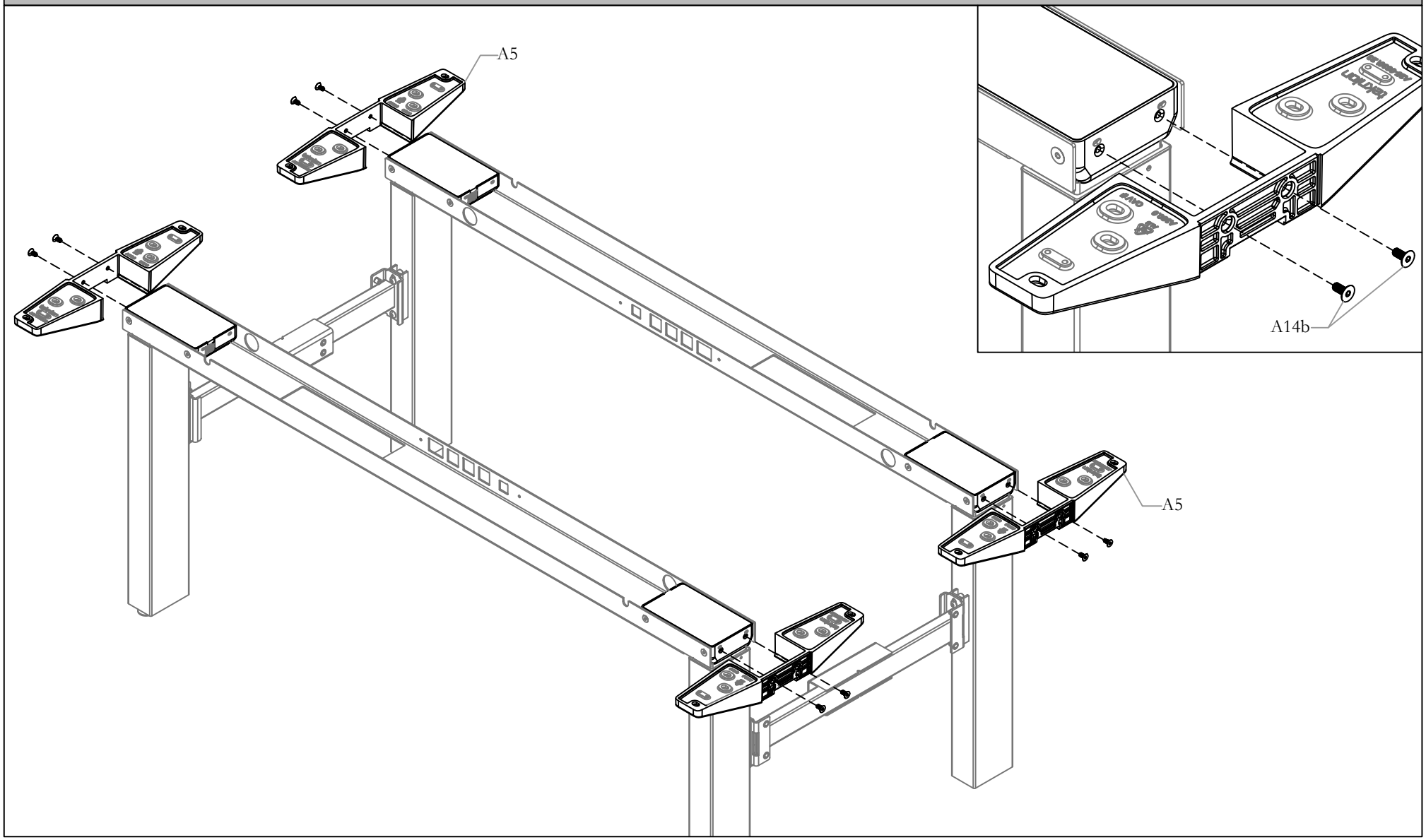

STEP 5: Attach Struts to all leg assemblies.

ATTACH STRUTS COVERS TO STRUTS

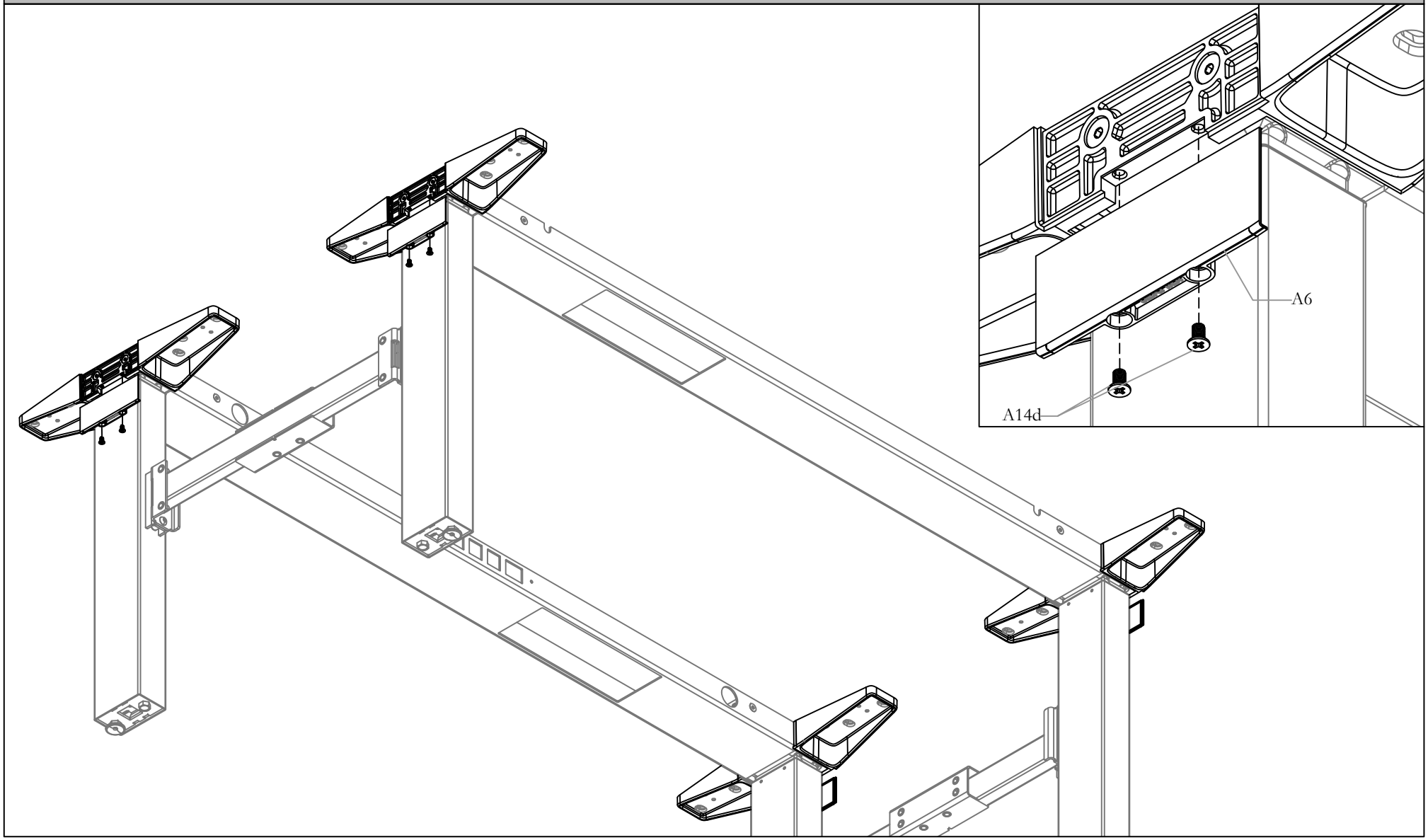

STEP 5: Attach Struts covers to struts installed with screws provided.

INSTALL FRAME LINK (OPTIONAL)

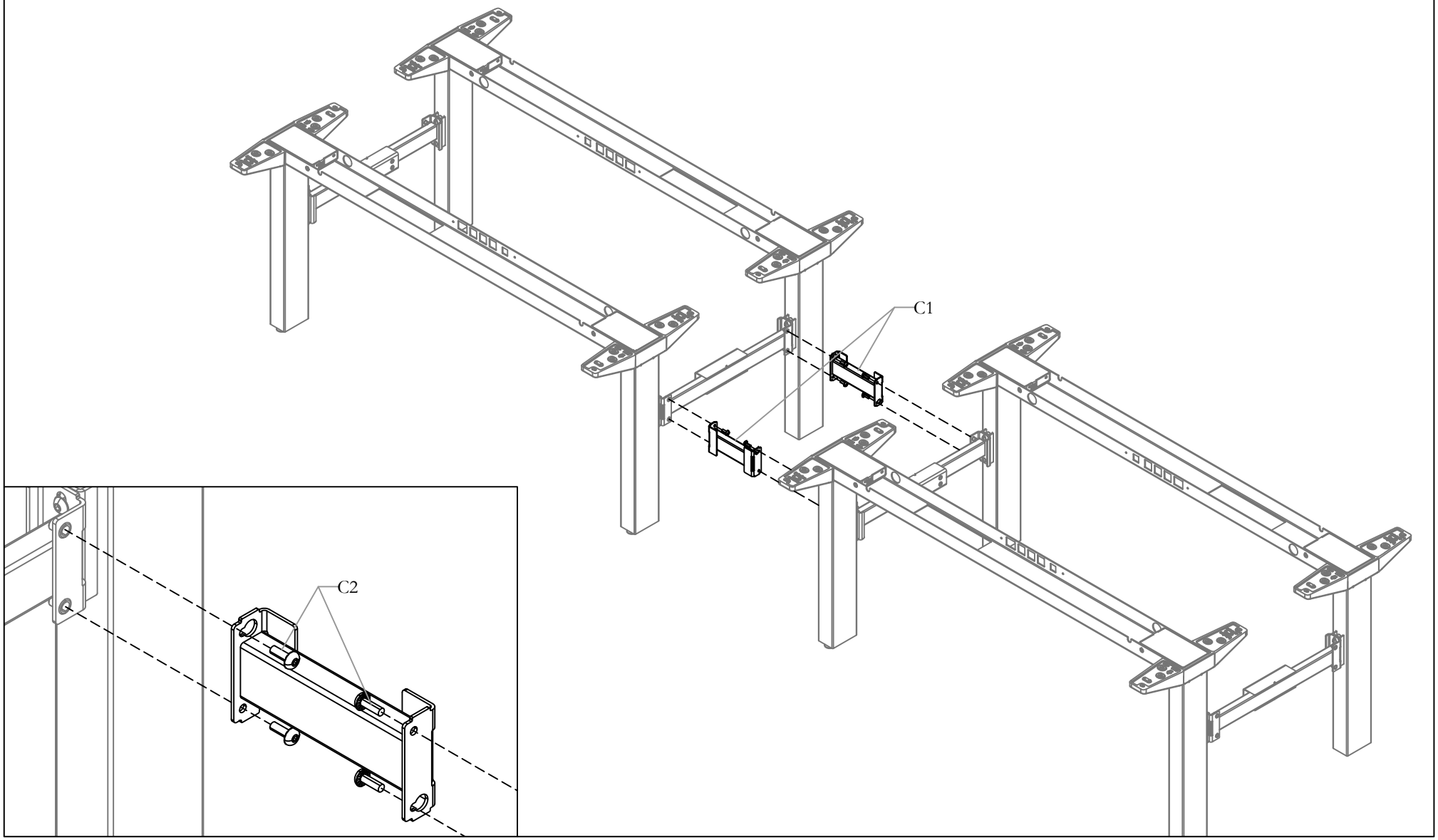

STEP 7: Fasten Frame Link to one of the table frame Stretcher Bars first, as indicated. Bring over second frame and attach stretcher bar to Frame link as shown above.

ATTACH POWER MODULE (OPTIONAL)

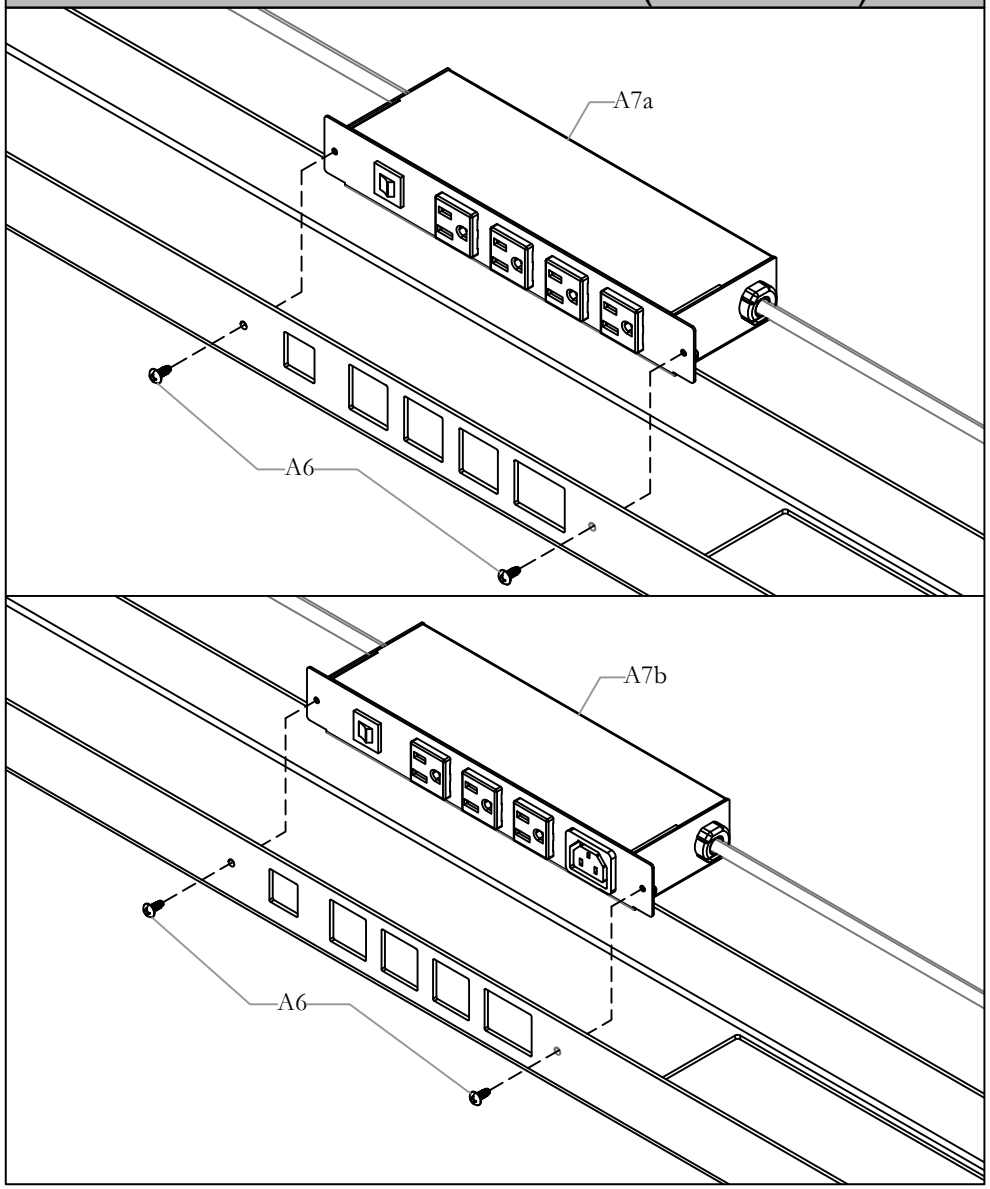

STEP 8a: Attach Power Module as shown above.

ATTACH POWER MODULE COVER (OPTIONAL)

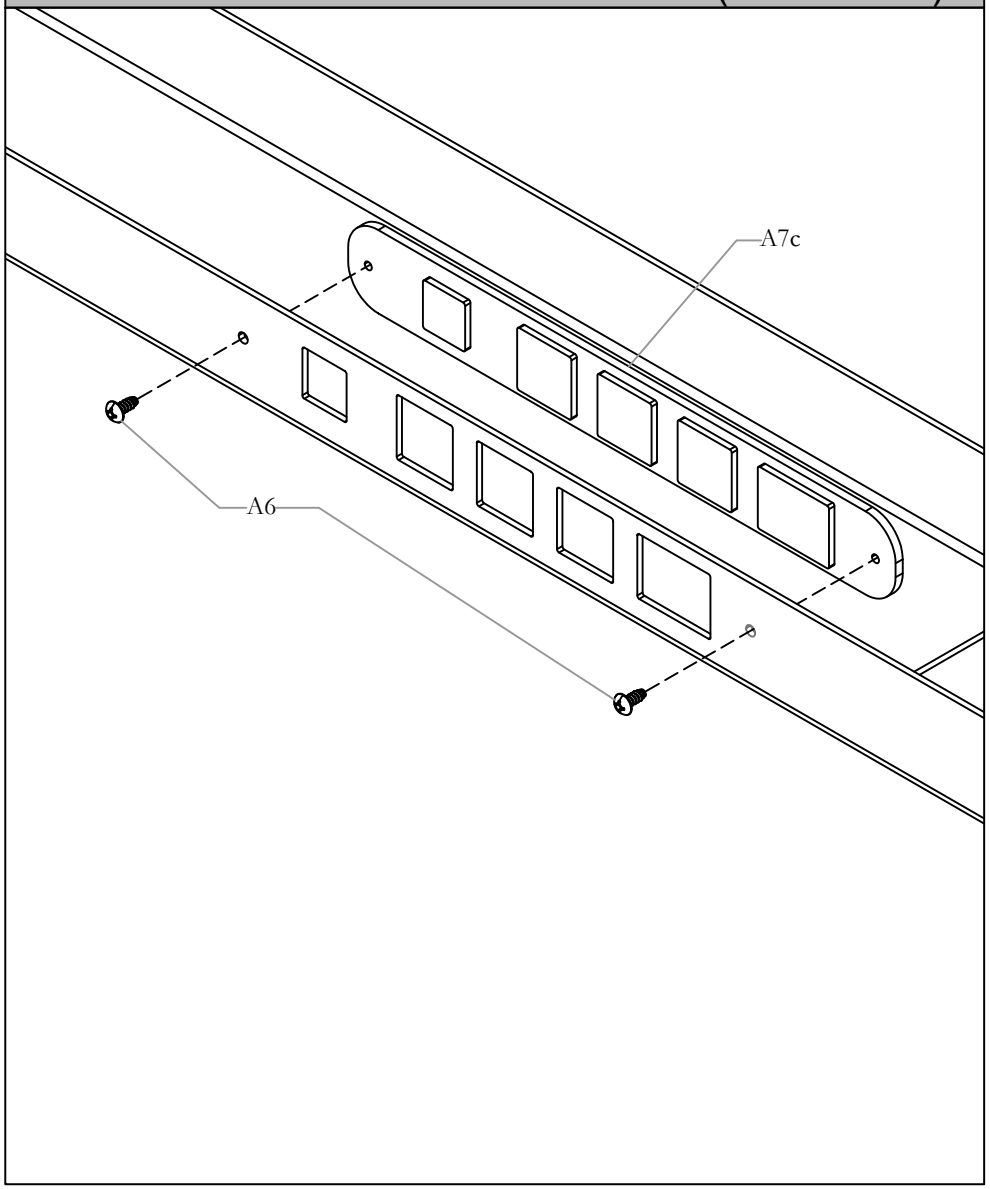

STEP 8b: Attach Power Module Cover as shown above.

WIRE CONNECTIONS

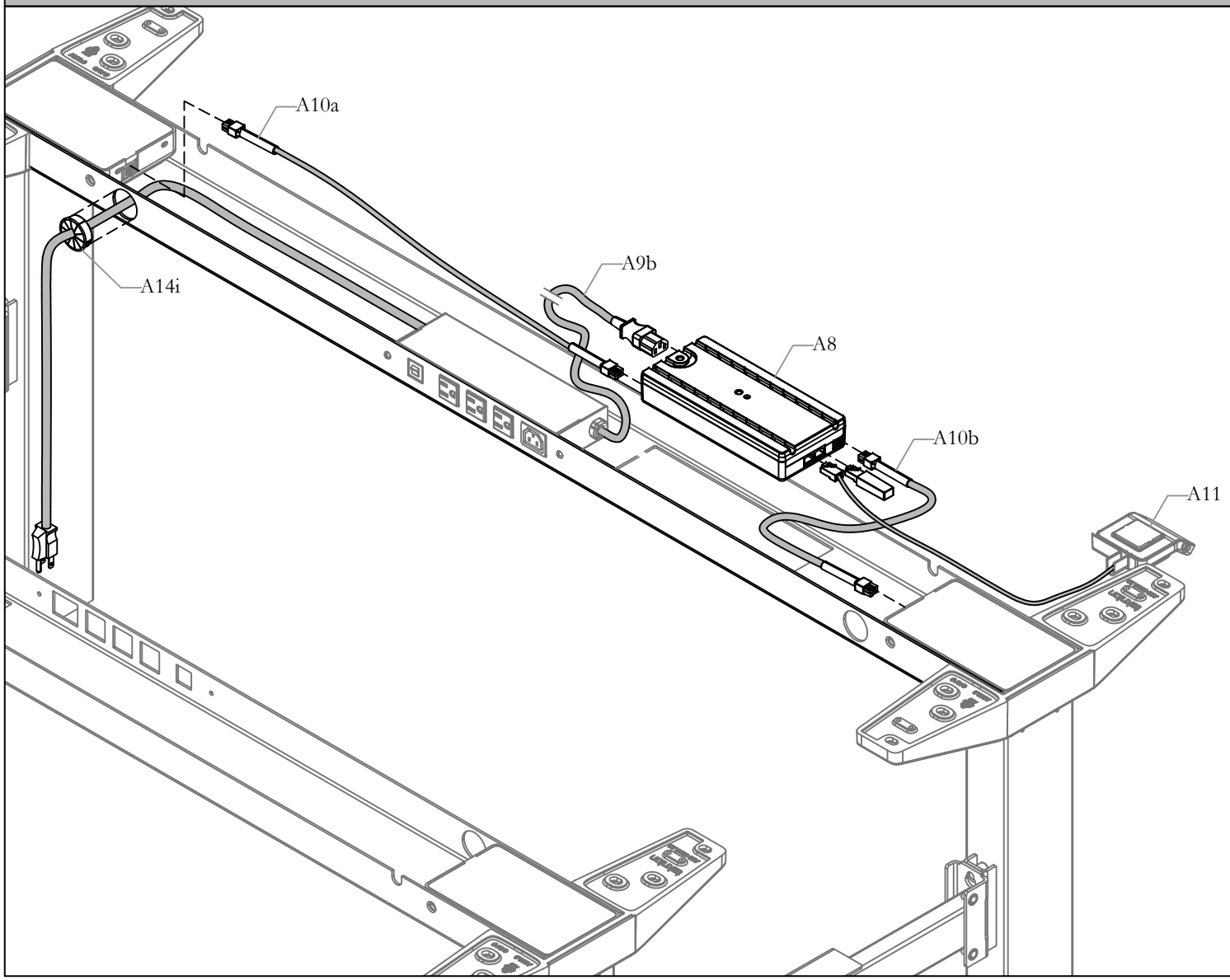

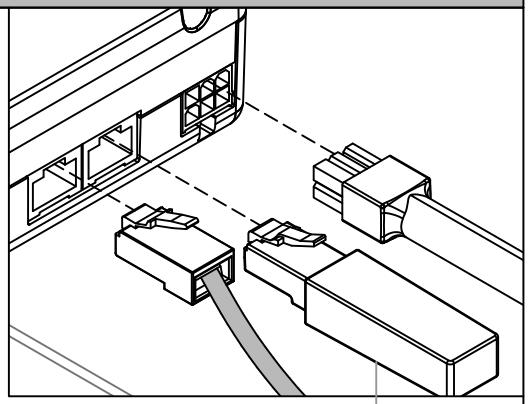

NOTE: Make sure that the Dongle is connected to the control box.

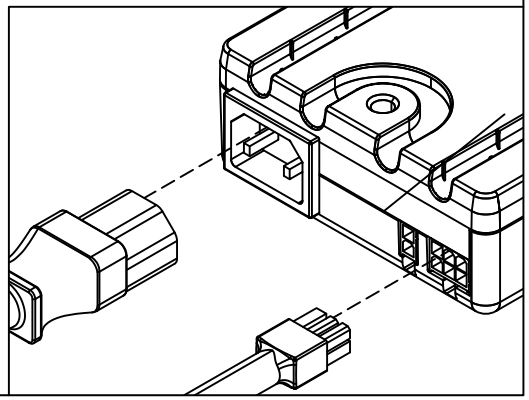

STEP 9: Make the Wire Connections as shown above.

ATTACH WORKSURFACE TO FRAME

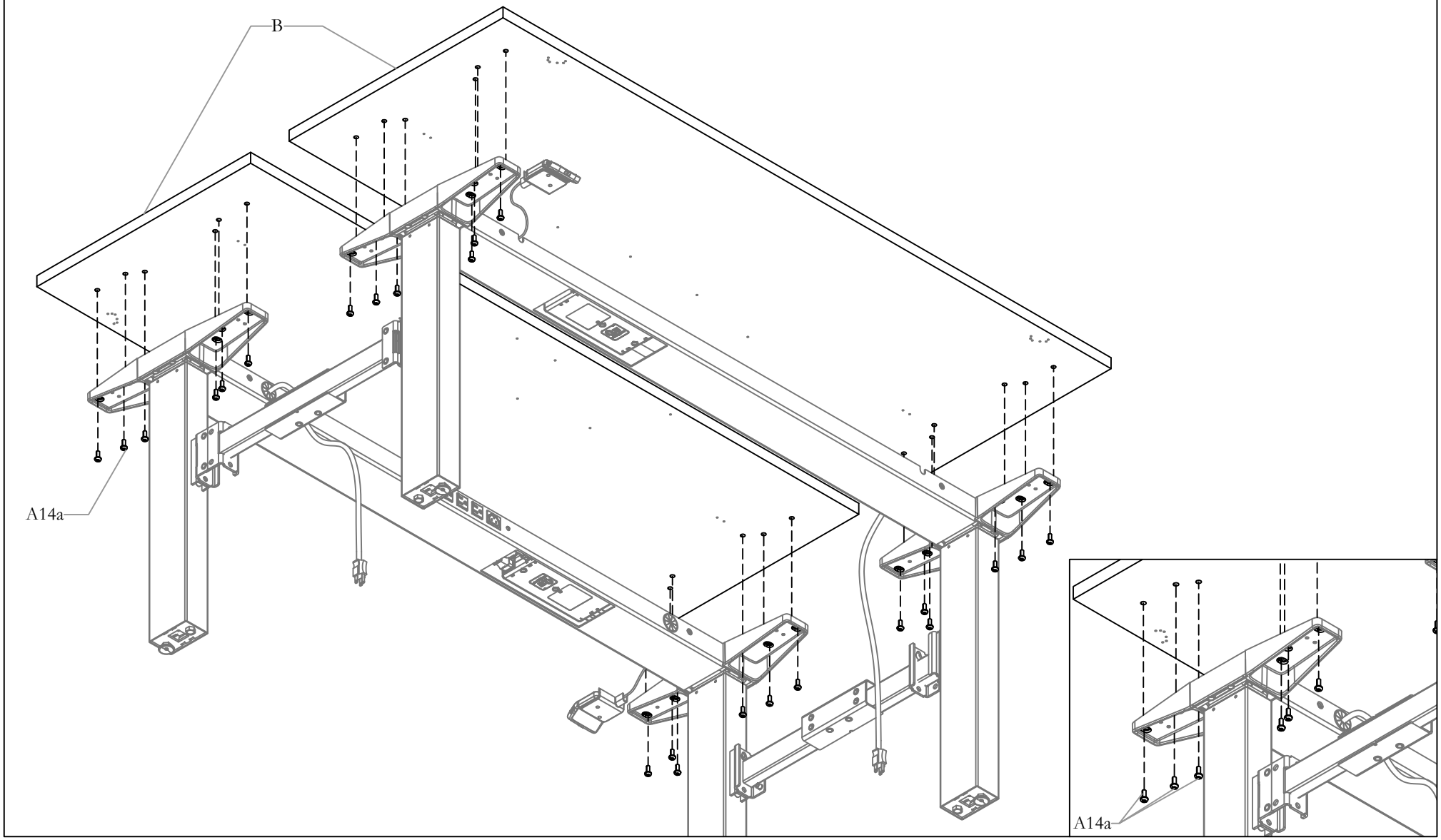

STEP 10: Attach Worksurface to Frame with screws provided.

ALIGN WORKSURFACE

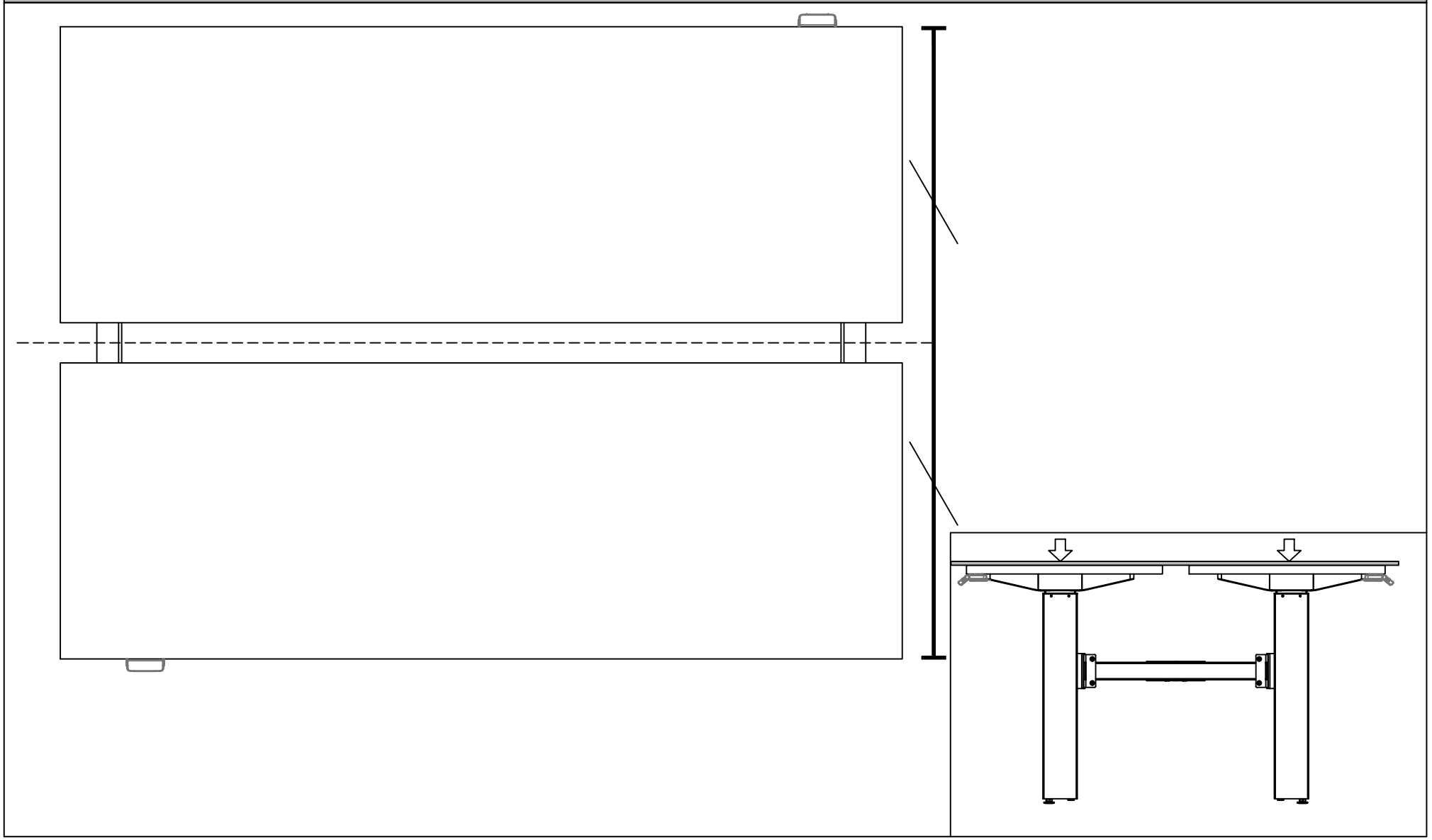

STEP 11: Align Worksurface as shown above.

ATTACH SWITCH TO WORKSURFACE

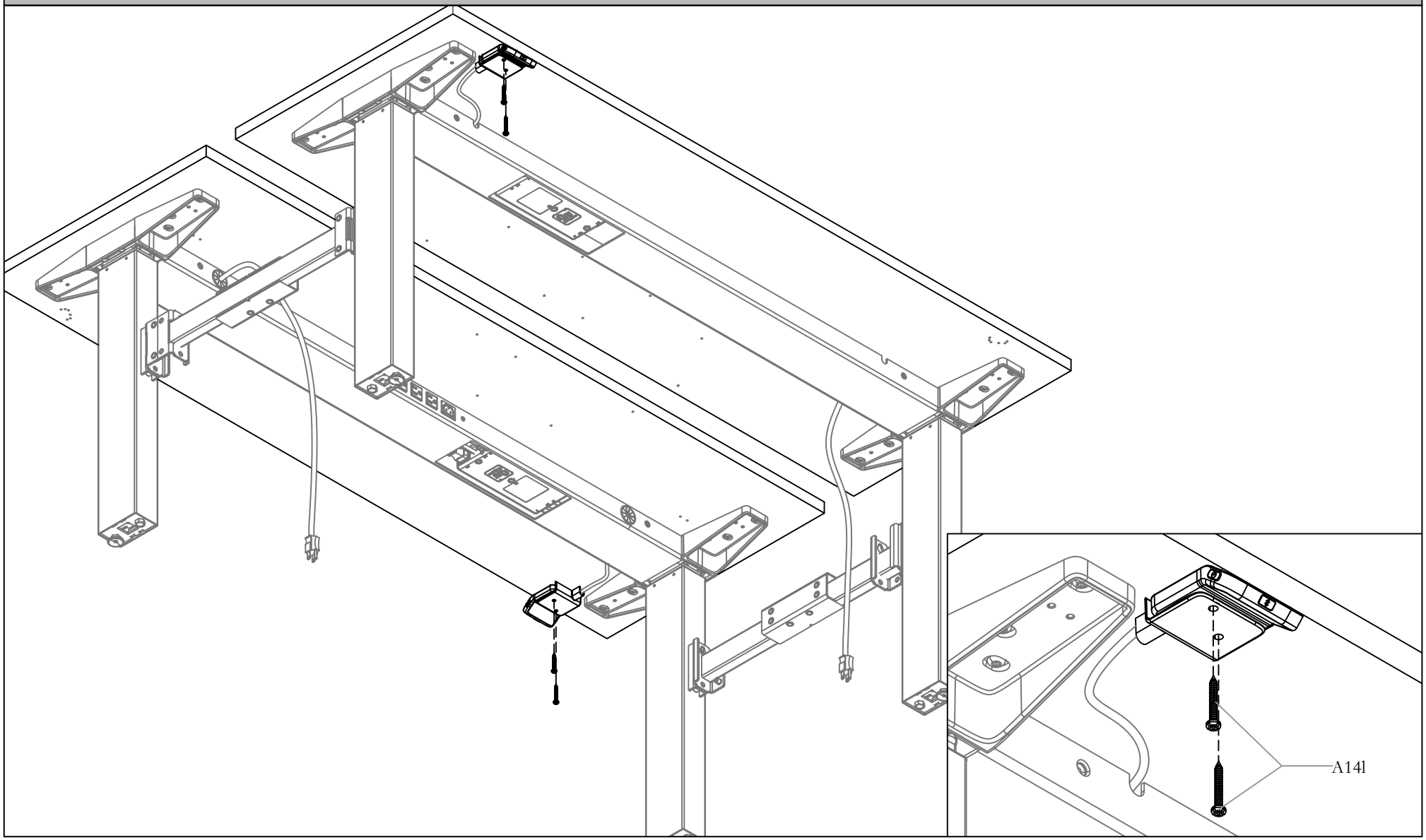

STEP 12: Attach Switch to Worksurface as shown above. Secure with the screws provided.

ATTACH CABLE CLAMPS

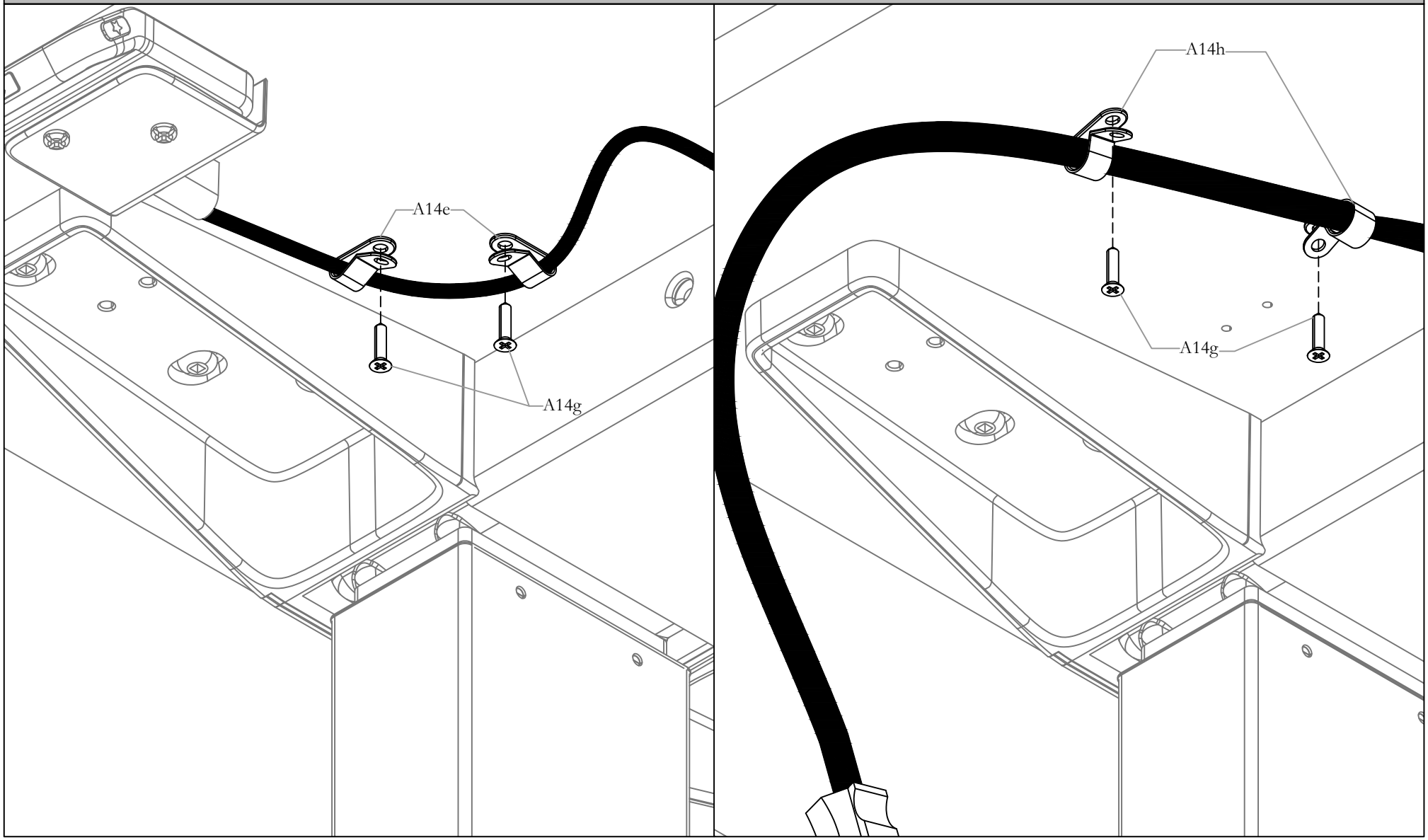

STEP 13: Using wire/Cable Clips and Screws, organize wires as shown above.

ATTACH CONTROL BOX TO WORKSURFACE

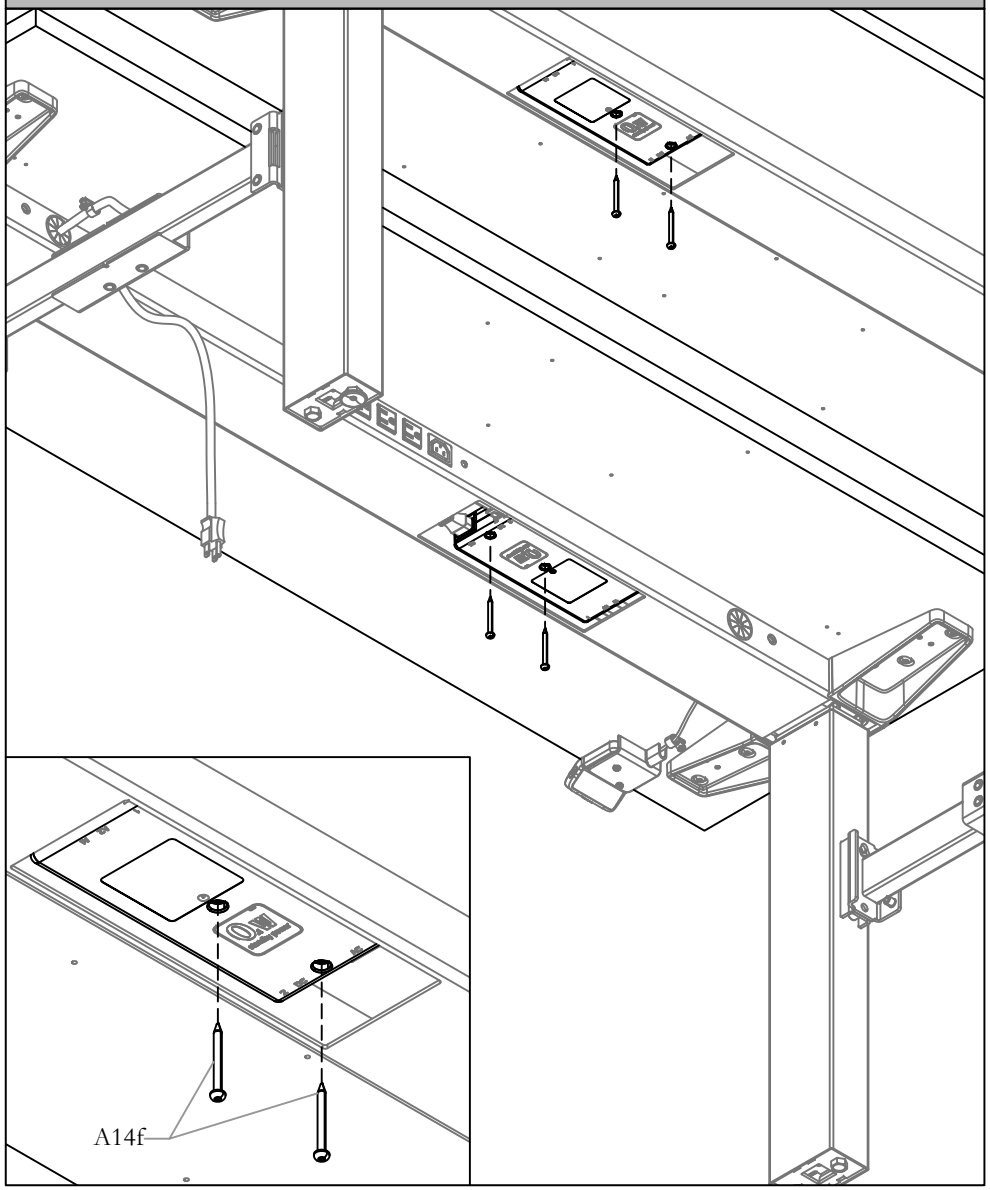

STEP 14: Attach Control box to worksurface with screws provided.

ATTACH CONTROL BOX COVER

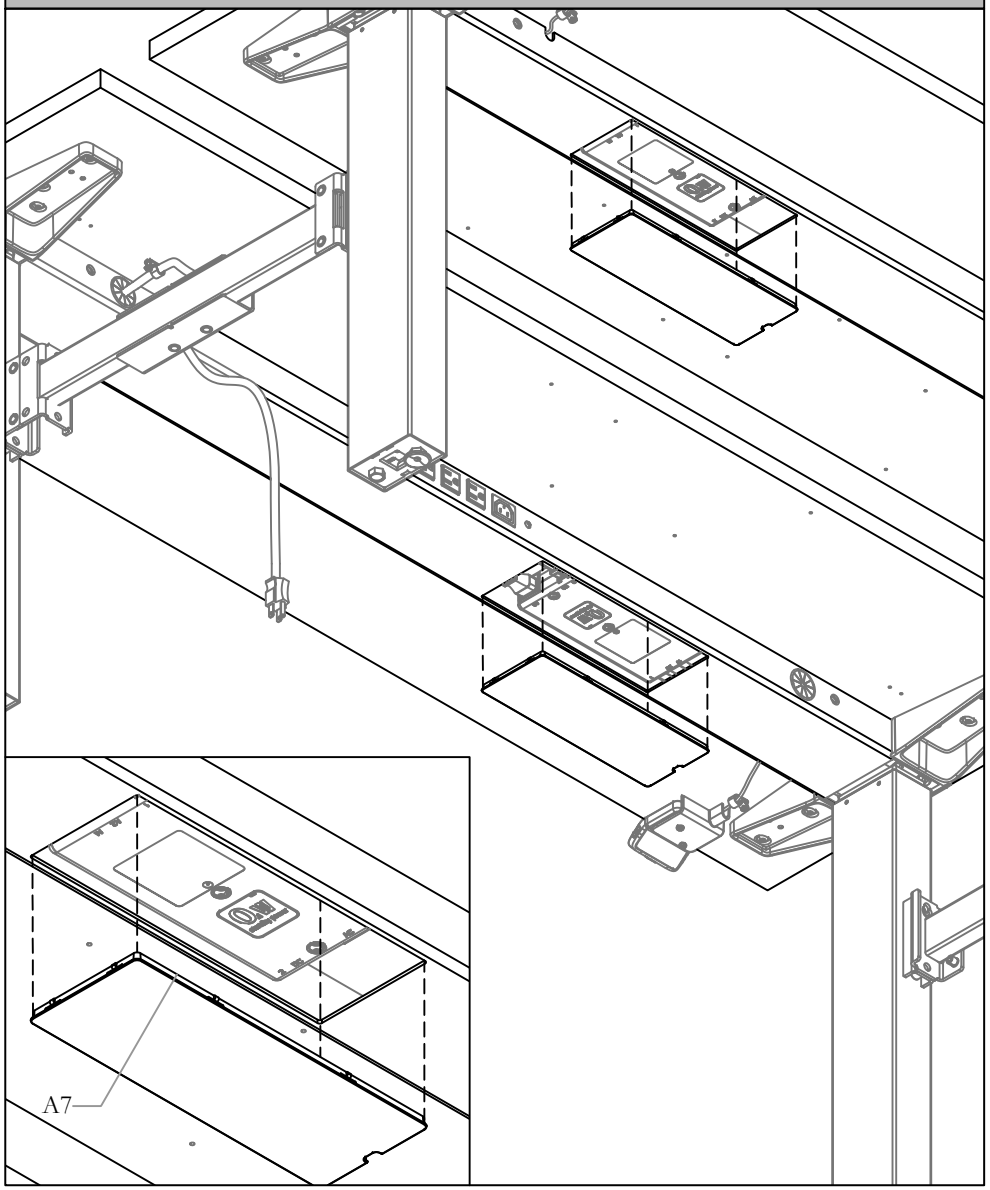

STEP 15: Attach Control Box cover as shown above.

PLASTIC TRAY CABLE MANAGEMENT (OPTIONAL)

NOTE: Refer to COM_151b for Dual Plastic Tray Cable Management.

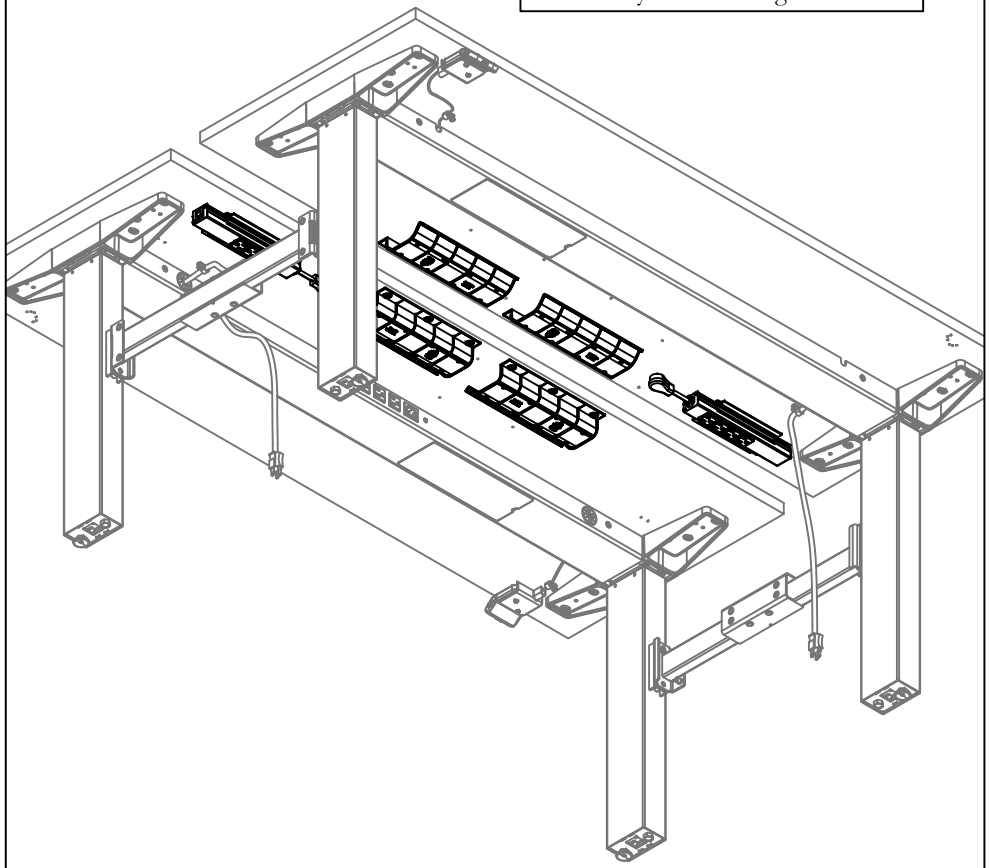

STEP 16a: Refer to COM_151b for Dual Plastic Tray Cable Management.

CABLE ORGANIZER (OPTIONAL)

NOTE: Refer to COM_151a for Cable Organizer.

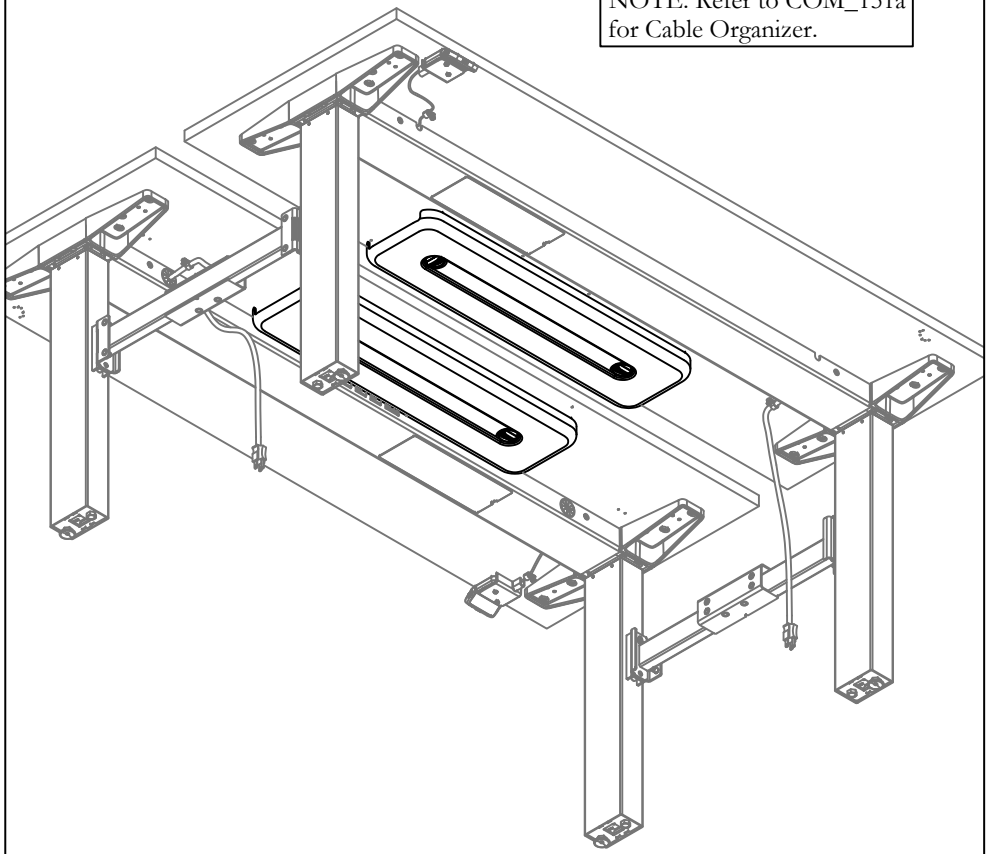

STEP 16b: Refer to COM_151a for Cable Organizer.

NAVIGATE SYSTEMS LINK (HNBFNS)

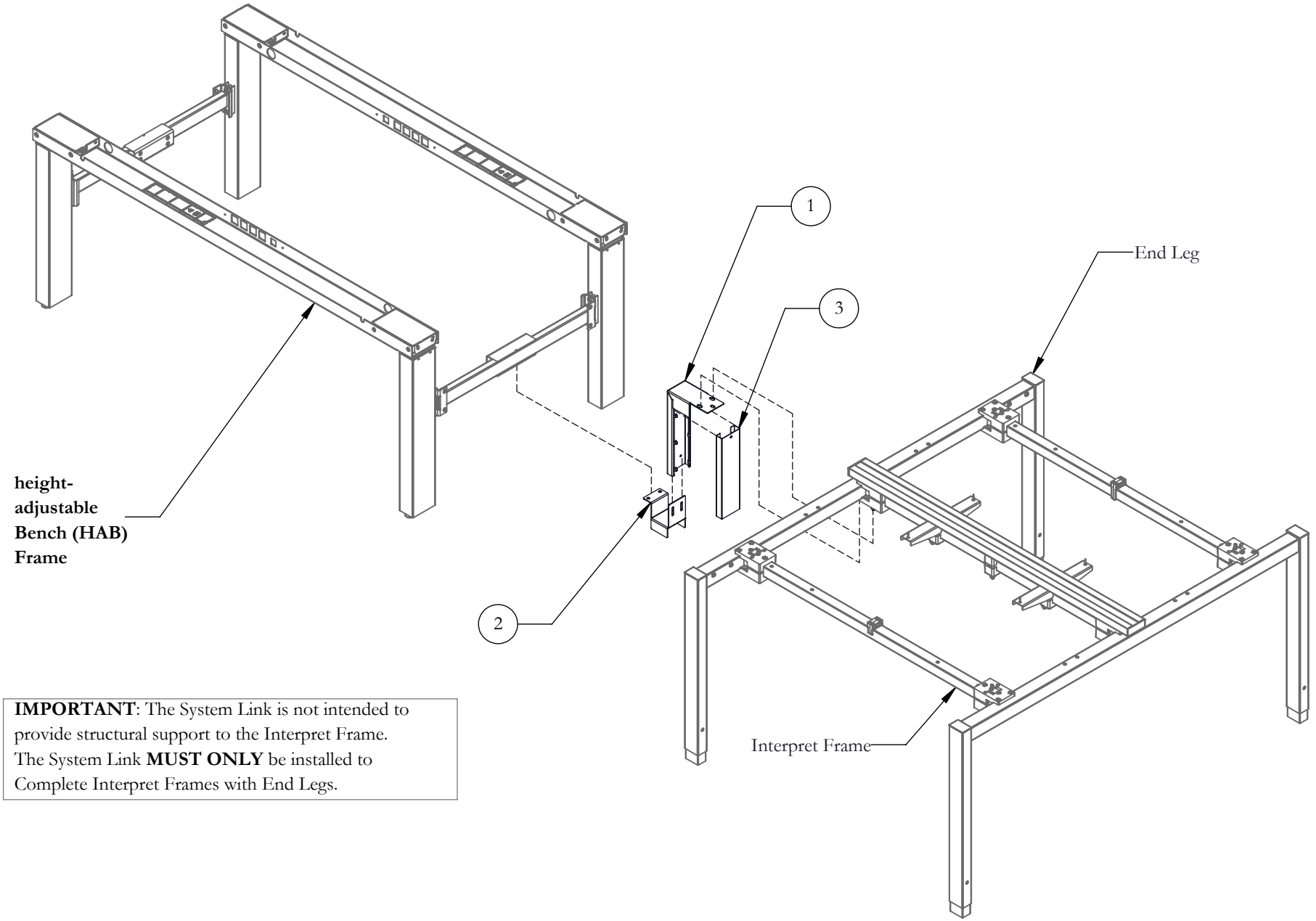

IMPORTANT: The System Link is not intended to provide structural support to the Interpret Frame. The System Link **MUST ONLY** be installed to Complete Interpret Frames with End Legs.

Part & Product Identification

ITEM NO.	PREVIEW	DESCRIPTION	PART NUMBER	QTY.
1	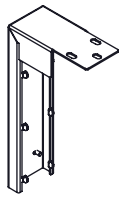	SYSTEM LINK TOP BRKT SUB ASSY, HAB TO INTERPRET	N09-5120	1
2	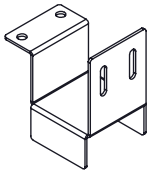	SYSTEM LINK BOTTOM BRACKET, HAB TO INTERPRET	A16-3051	1
3		SYSTEM LINK COVER, HAB TO INTERPRET	A16-3200	1
4	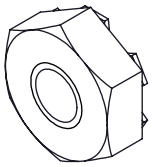	1/4-20 UNC. NUT HEX KEPS ZINC	E03-0059	2
5	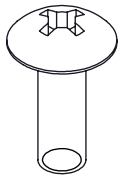	1/4-20X3/4" MACH SCR, QUAD,TRUSS	E01-2010	2

ATTACH TOP BRACKET TO INTERPRET FRAME

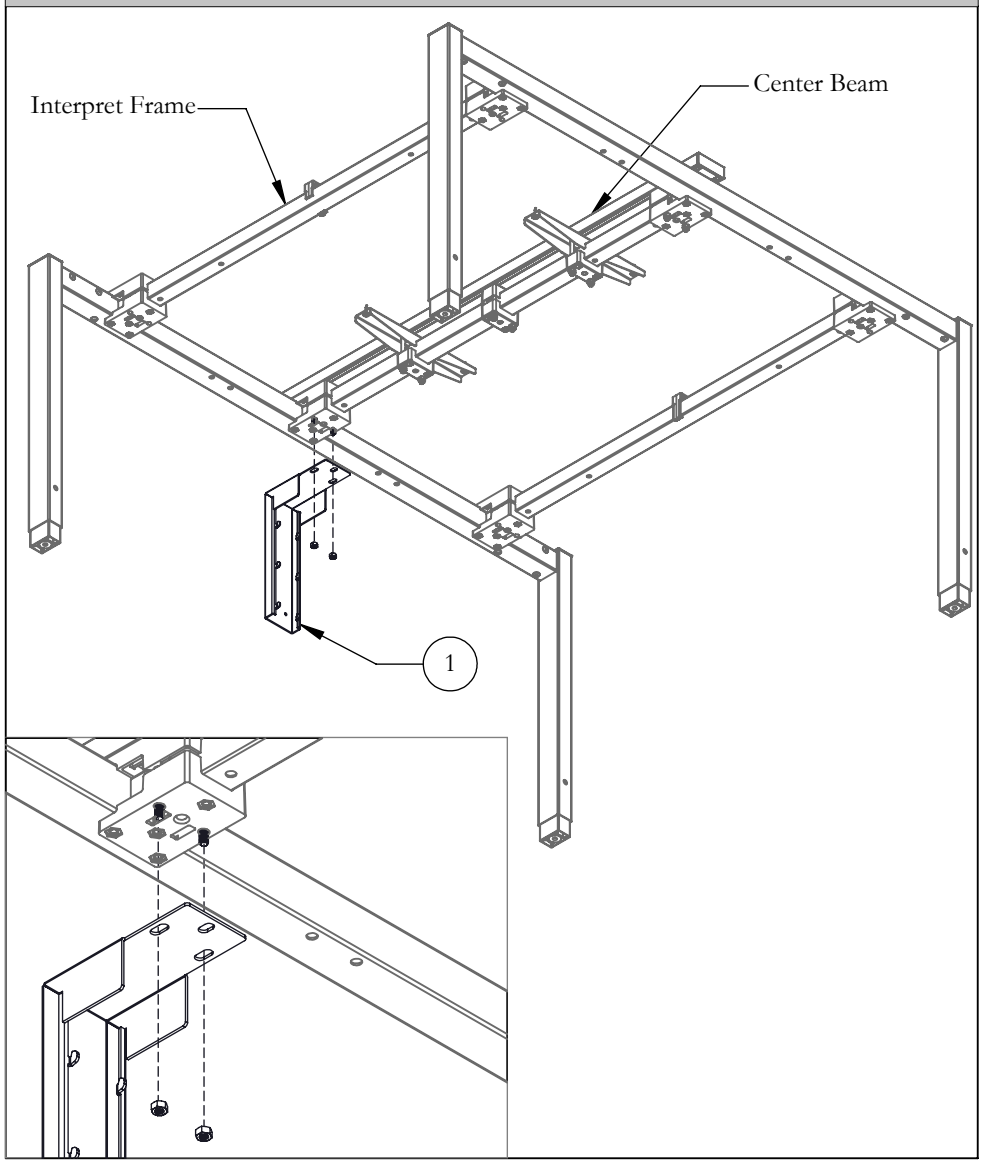

STEP 1: Using Interpret Frame Nuts, fasten Top Bracket to Center Beam of Interpret Frame, as shown.

PLACE BOTTOM BRACKET IN PLACE

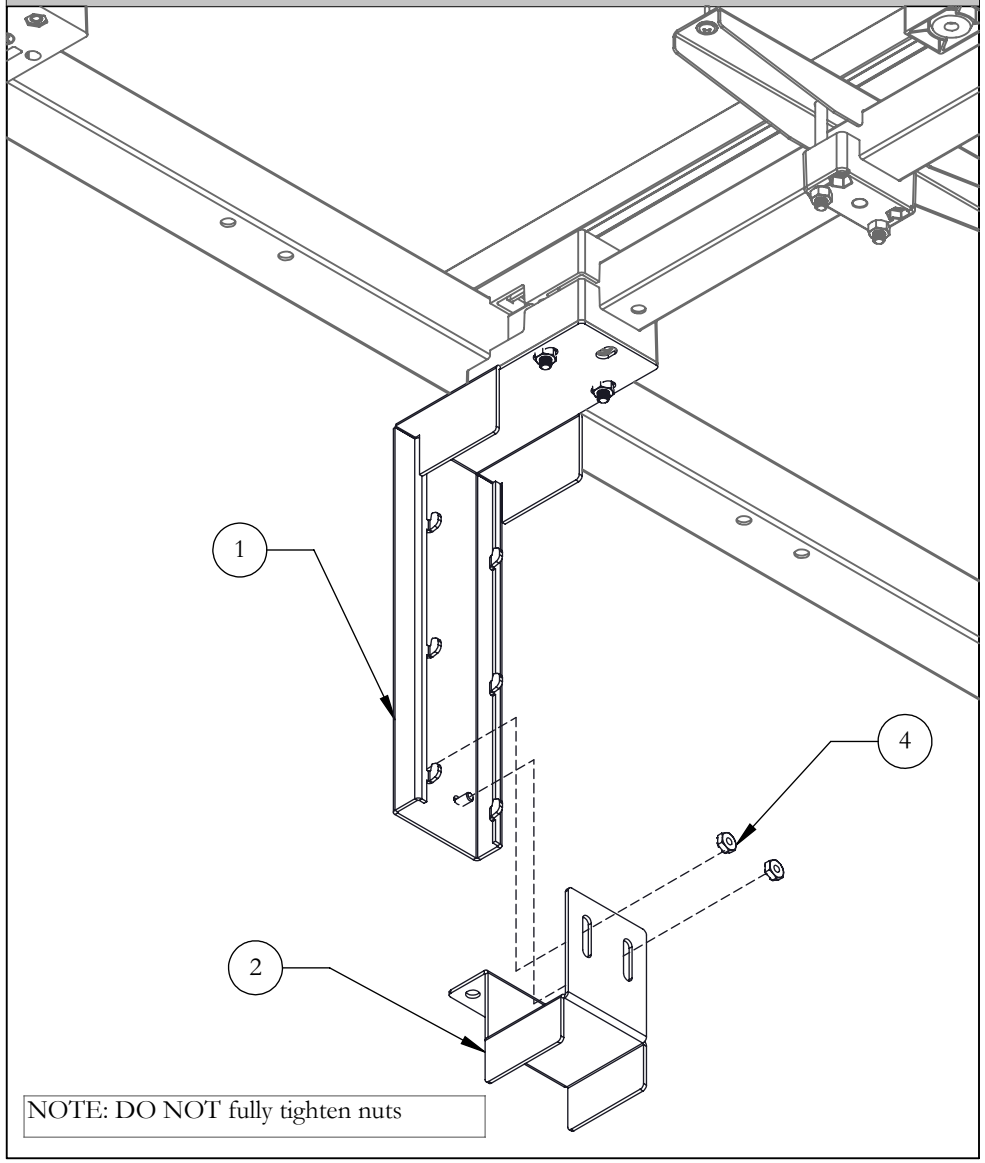

STEP 2: Place Bottomg Bracket in plscce by inserting Top Bracket studs into Bottom Bracket slots. Fasten Nuts prodvided but **DO NOT fully tighten.**

ATTACH BOTTOM BRACKET TO HAB FRAME

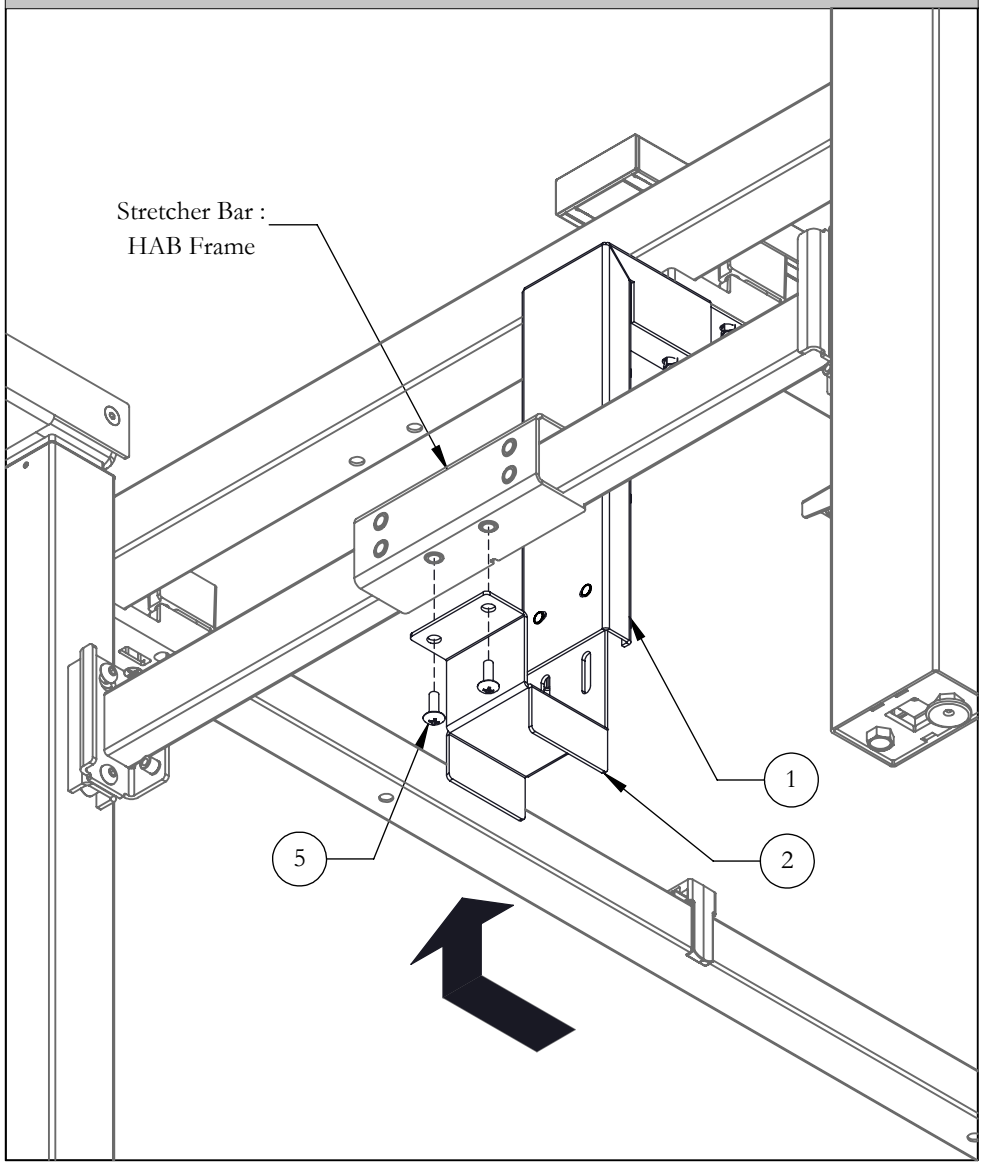

STEP 3: Align Bottom Bracket & HAB Frame Stretcher Bar holes. Slide Bottom Bracket up & fasten it to HAB Frame Stretcher Bar with Mach Screws provided

TIGHTEN BRACKET NUTS

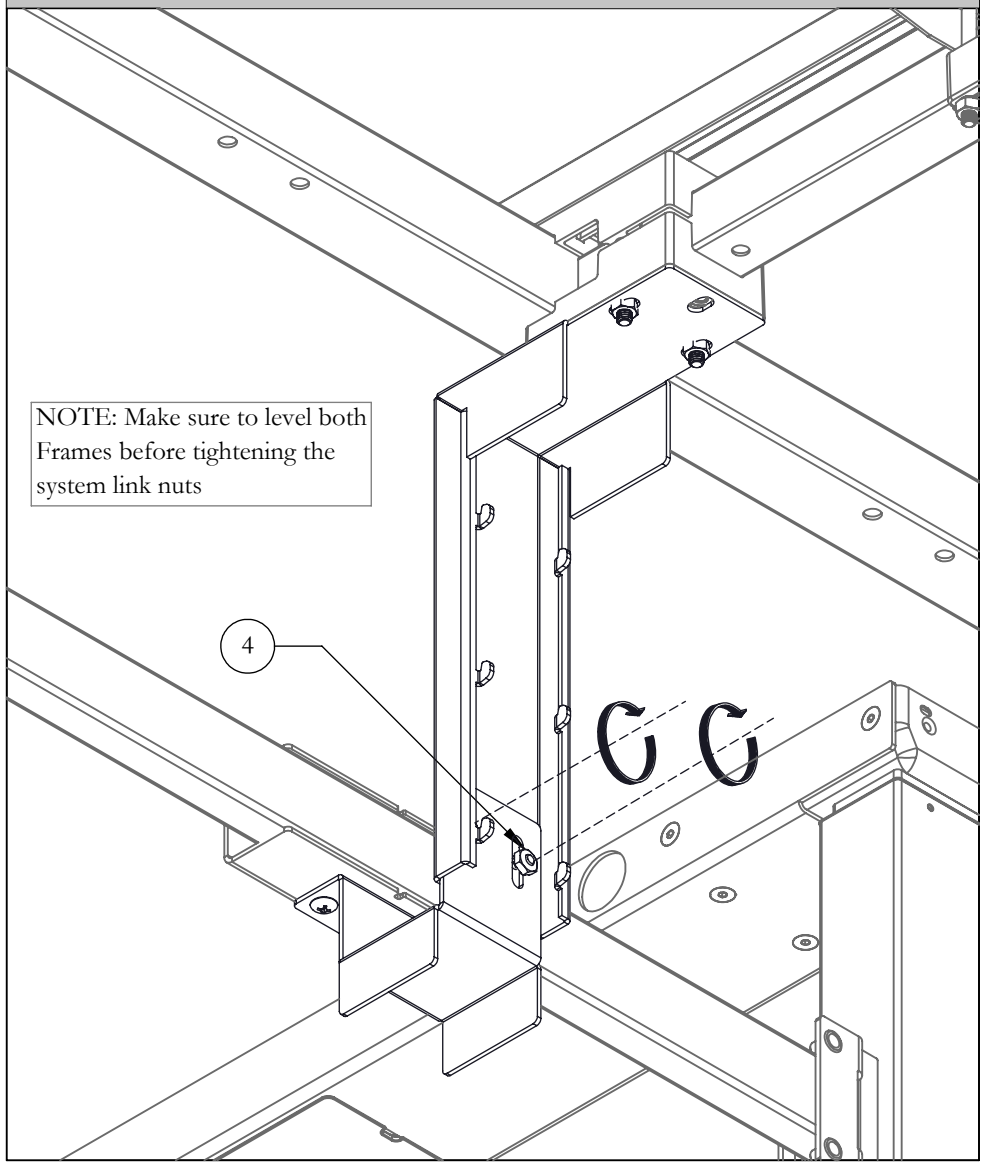

STEP 4: **Fully tighten** Top Bracket Nuts to secure Bottom Bracket in place.

ROUTE CABLES THROUGH SYSTEM LINK

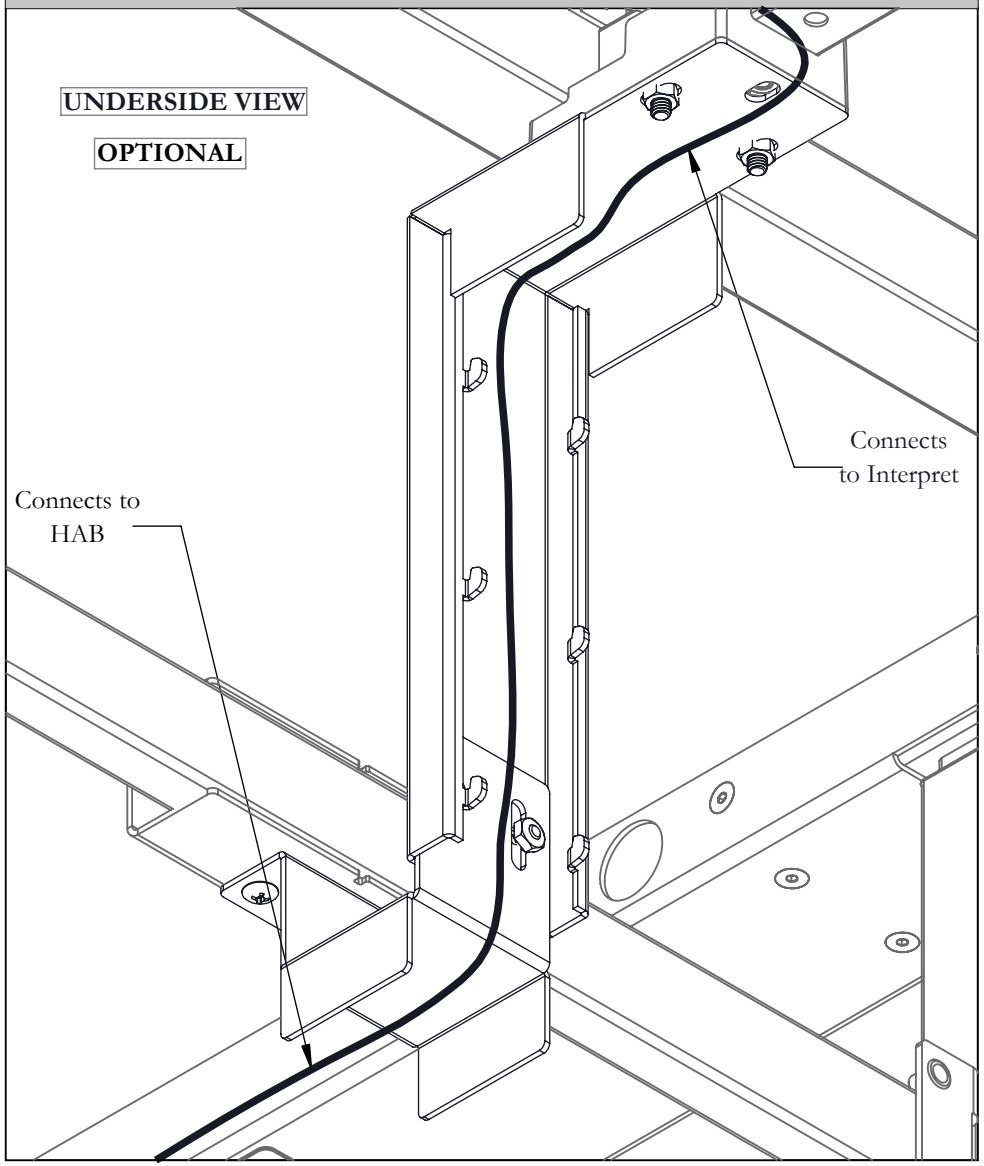

STEP 5: Route cables through System Link to electrically connect both systems

INSTALL FRAME LINK COVER

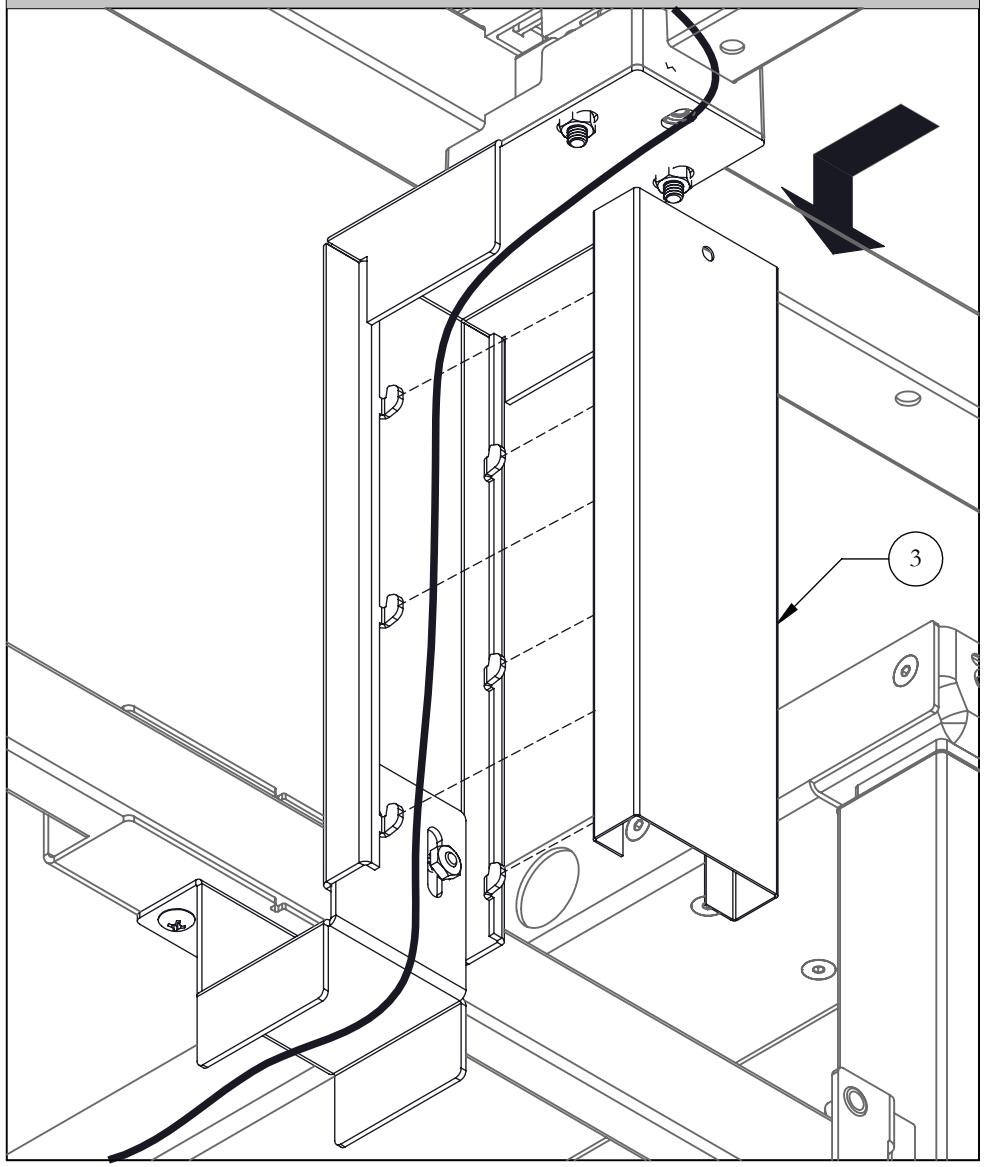

STEP 6: Insert the Top Bracket hooks into the vertical slots on the System Link Cover and allow Cover to slide slightly down

Navigate 120 HA Frame (HNBFNT) and Navigate 120 Worksurface (HNBWTN)

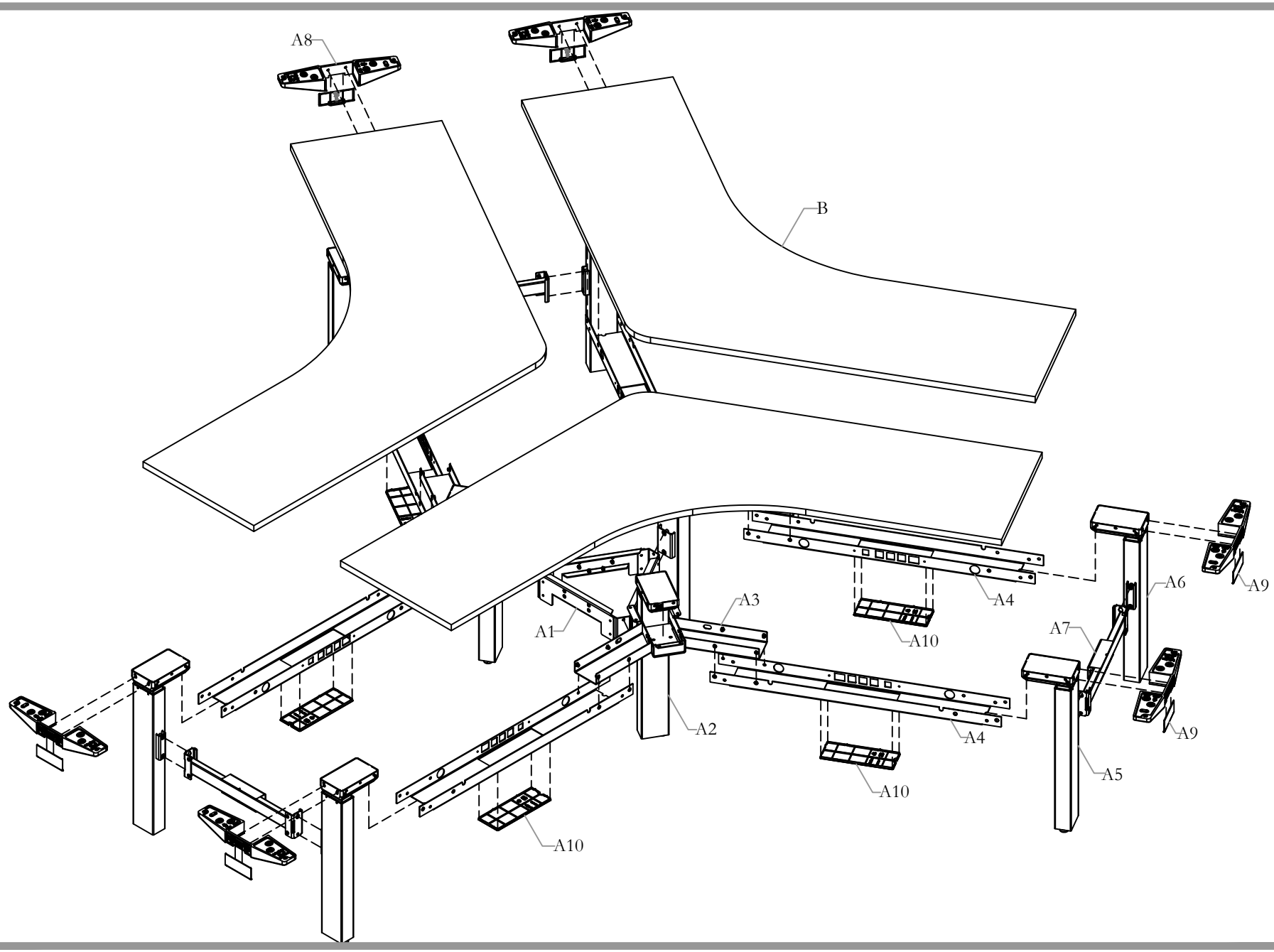

Parts & Products Indentification

A - HAB Navigate 120 Frame (HNBFNT) x1
Frame Assm. Std Range Elec (N09-9008) x1

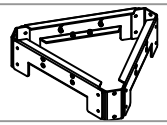

A1 - Navigate 120 HAB Mid Gable Stratcher (N09-8966) x1



A2 - Centre Leg Assm. 120 HAB (N09-9011) x3

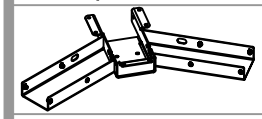

A3 - Centre Leg Top Mount (N09-8748) x3

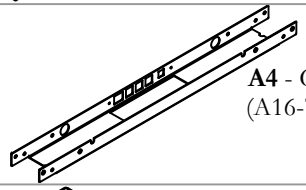

A4 - Cross Beam (A16-7717) x6

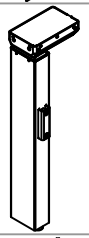

A5 - Navigate HAB Leg Assm (N09-8583R) x3

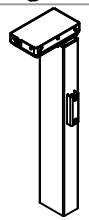

A6 - Navigate HAB Leg Assm (N09-8583L) x3

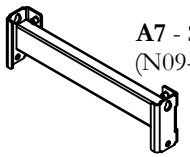

A7 - Stretcher Assm (N09-5870) x3

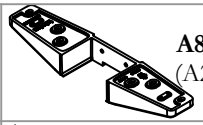

A8 - Navigate Strut (A25-0630) x6

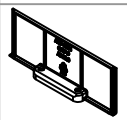

A9 - Navigate Strut Cover (A25-0631) x6

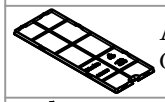

A10 - Control Box Cover (B02-0739) x6

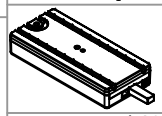

A11 - Programmed Control Box (N09-8348) x3

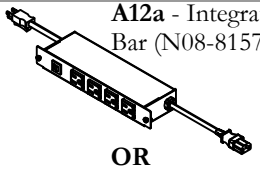

A12a - Integrated Power Bar (N08-8157)x1

OR

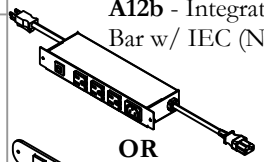

A12b - Integrated Power Bar w/ IEC (N09-8737)x1

OR

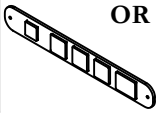

A12c - Power Bar Hole Cover (B02-0736)x1

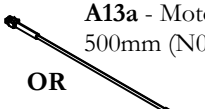

A13a - Motor Cable-500mm (N09-8402\05)x3

OR

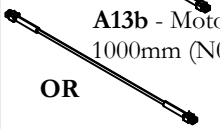

A13b - Motor Cable-1000mm (N09-8402\10)x3

OR

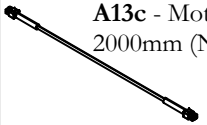

A13c - Motor Cable-2000mm (N09-8402\20)x3

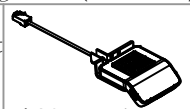

A14 - Navigate Digital Switch (N09-8183)x1

OR



A15 - Navigate Simple Switch (N09-8192)x1

OR



A16 - Display Switch w/ Up/Down Memory (N09-5600)x1

A17 - Hardware Kit (X05-0478)x1

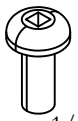

A17a - Screw 1/4-20x5/8, QD MCHN (E01-0992) x36



A17b - M6x1, 14mm Flat Head Screw (E01-1249) x84

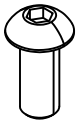

A17c -Machine Screw 5/16-18 x 3/4, Socket Screw (E01-1035) x18



A17d - M5x0.8-10, Flat Head Screw (E01-1289) x12



A17e - 3/16" Wire Clamp (B02-0598) x6



A17f -#10 Pan Quad Screw (E01-1009) x6

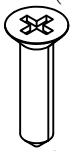

A17g - Flat Quad Wd Screw (E04-0090) x12



A17h - Cable Clamp 3/8" (B02-0558) x6

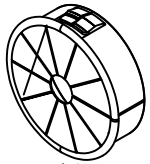

A17i - Grommet Bushing (B02-0557) x12

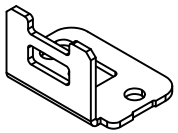

A17j - Linak Memory 90 Deg Mounting Brkt (A16-3970) x3

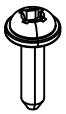

A17k - Wd Screw Pan Quad #8x5/8" (E04-0091) x6

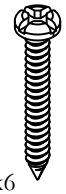

A17l - #8x1 1/4" Wd Screw (E04-0074) x6

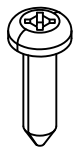

A17m - Wd Screw Pan Quad #12x7/8" (E04-0087) x18

Part and Product Identification

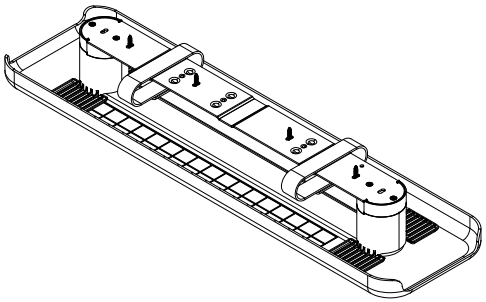

A18 - Cable Felt Organizer (YEYA)x1

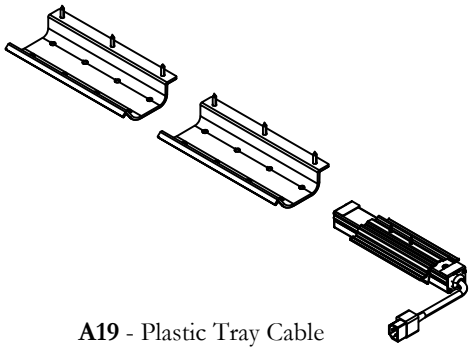

A19 - Plastic Tray Cable Management w/ IEC (N09-9781)x1

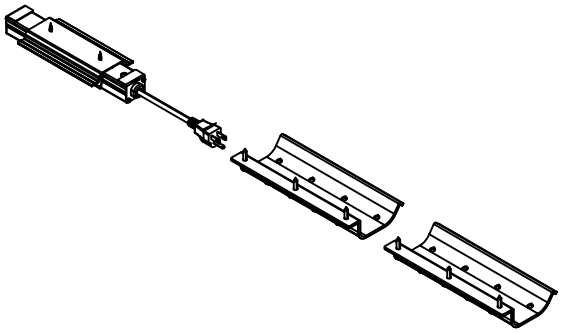

A20 - Plastic Tray Cable Management (YEYS01)x1

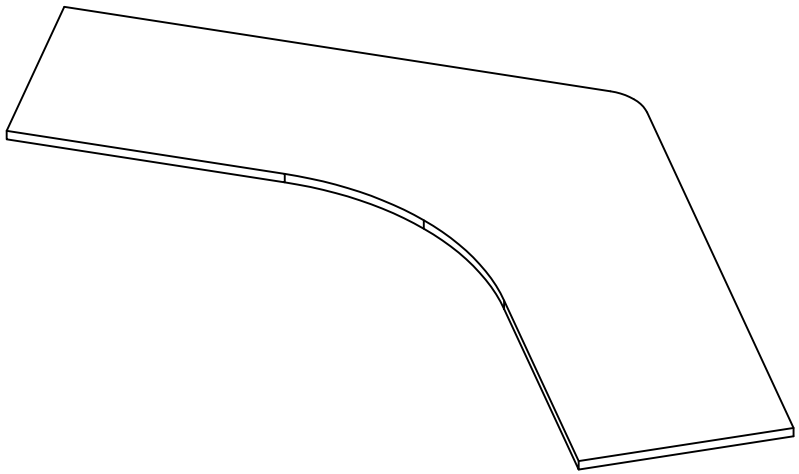

B - Navigate 120 Worksurface (HNBWTN) x1

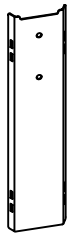

Hanger Plate (A16-7458) x3

OR



Mid Gable Spacer (A16-7672) x3

LEVELLER ADJUSTMENT

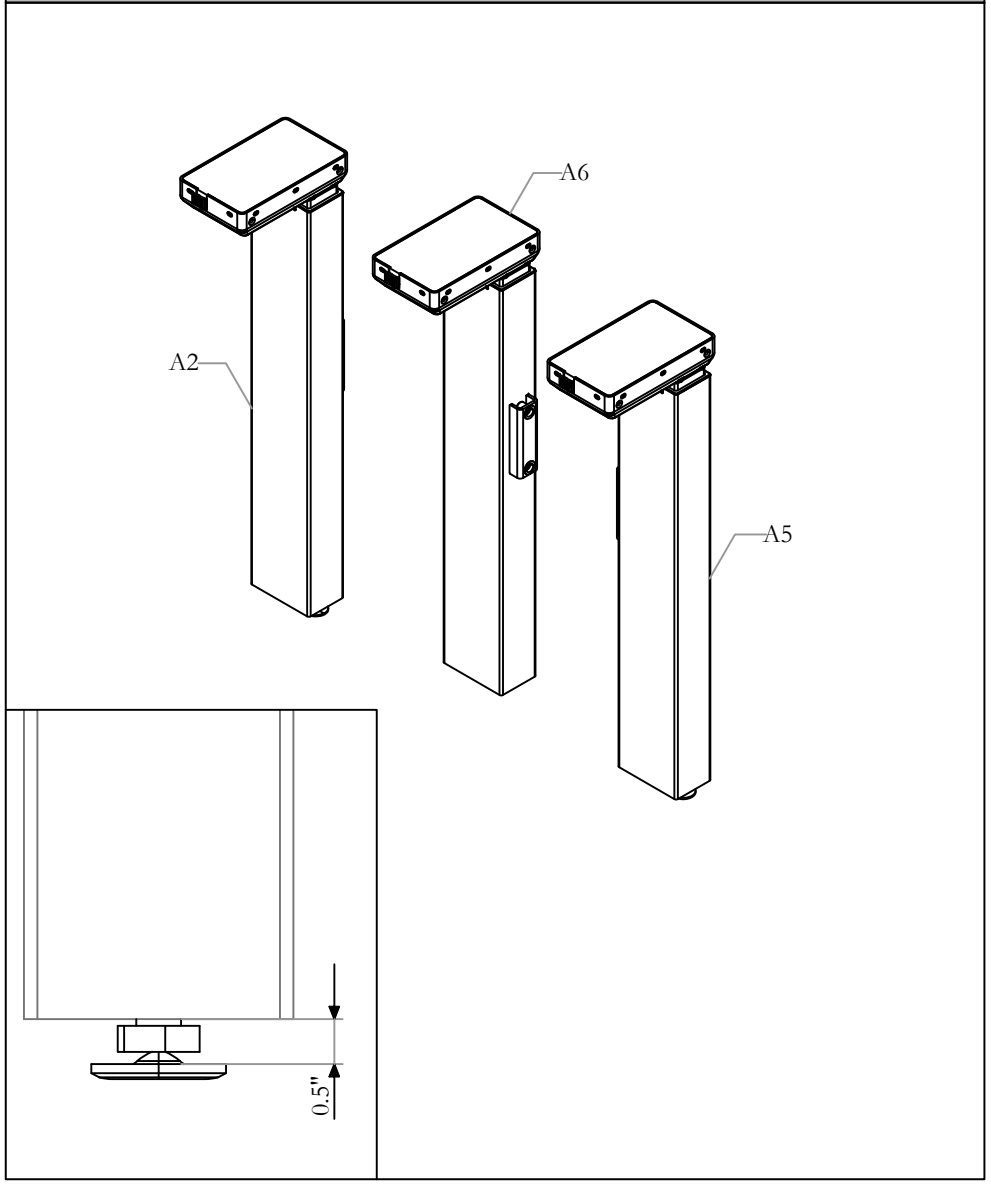

STEP 1: Adjust the Leveller to have a 0.5" Gap on all the Legs.

ASSEMBLE LEG AND MID GABLE STRATCHER

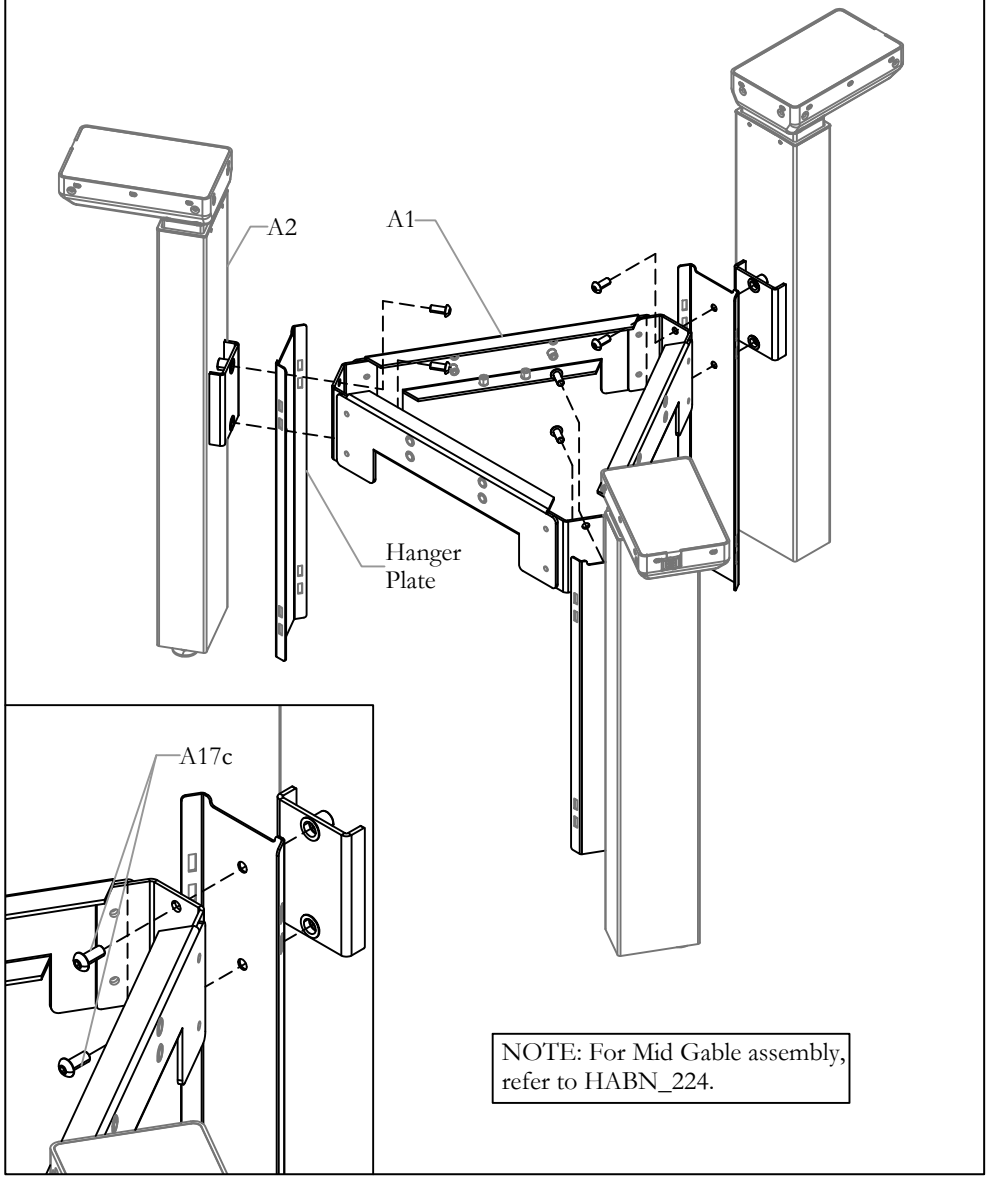

STEP 2: Assemble legs and Mid Gable stretcher as shown above. Assemble Hanger Plate if mid gable is specified. Secure it using the Screws provided.

ATTACH POWER POLE MOUNT (OPTIONAL)

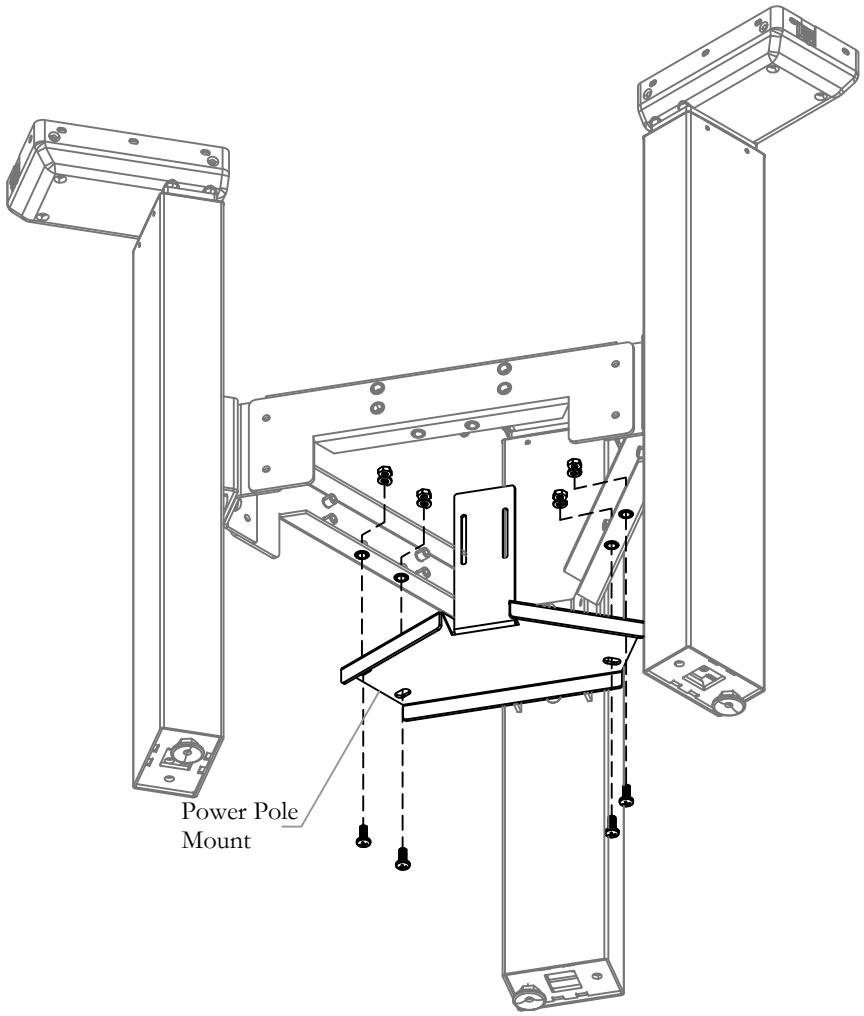

NOTE: For Power Pole assembly, refer to HABN_324.

STEP 3: Attach Power pole mount as shown above with screws and washers provided.

ASSEMBLE CENTRE LEG TOP MOUNT

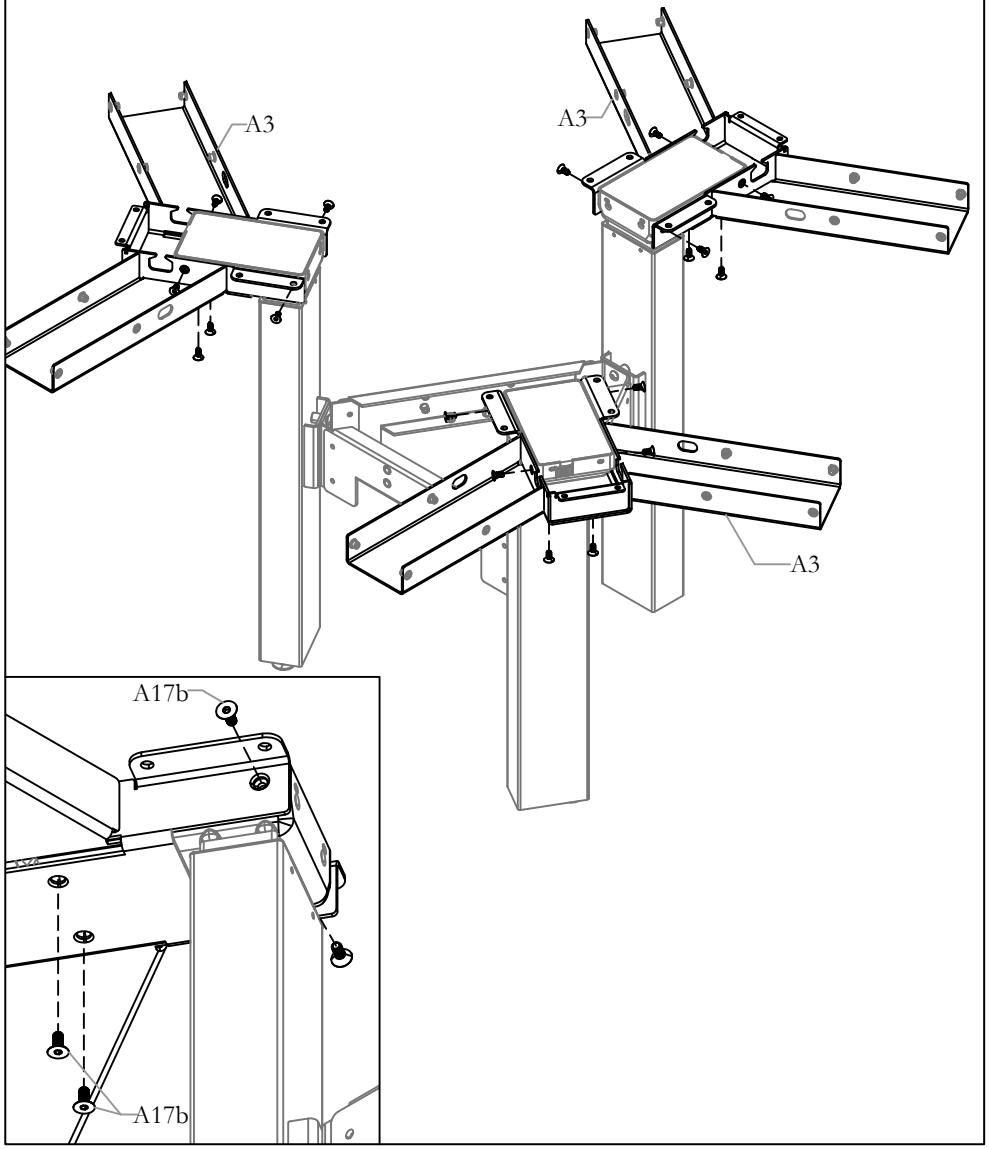

STEP 4: Assemble Centre Top mount with screws provided.

INSTALL CROSS BEAM

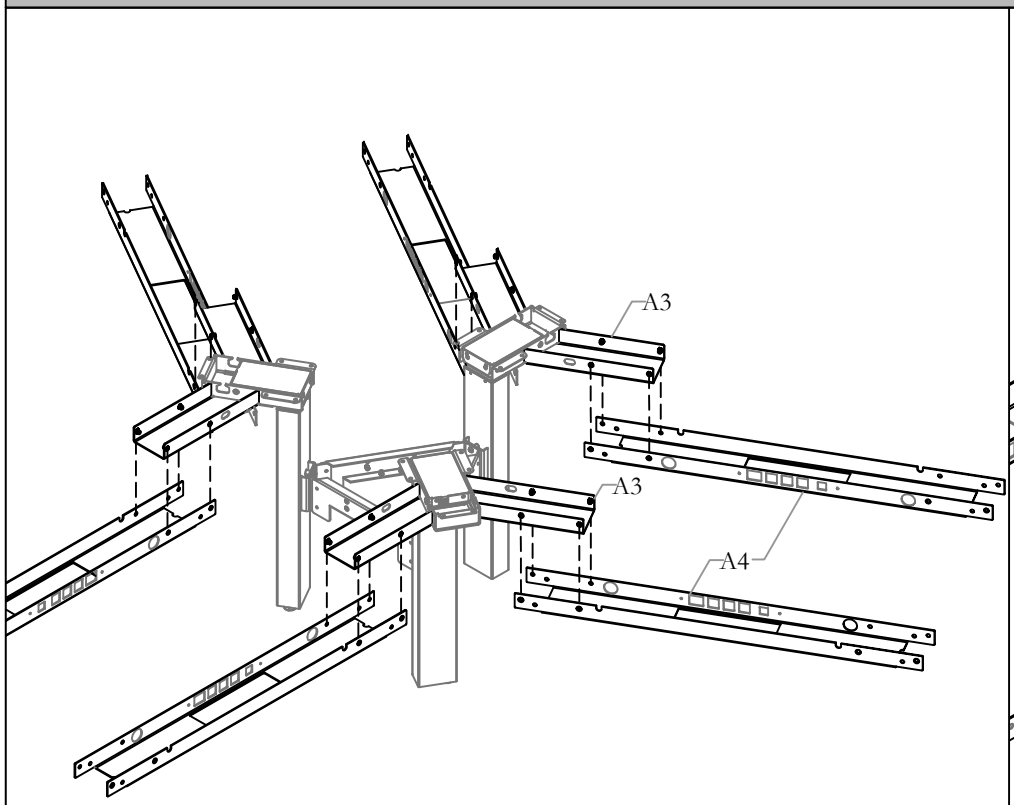

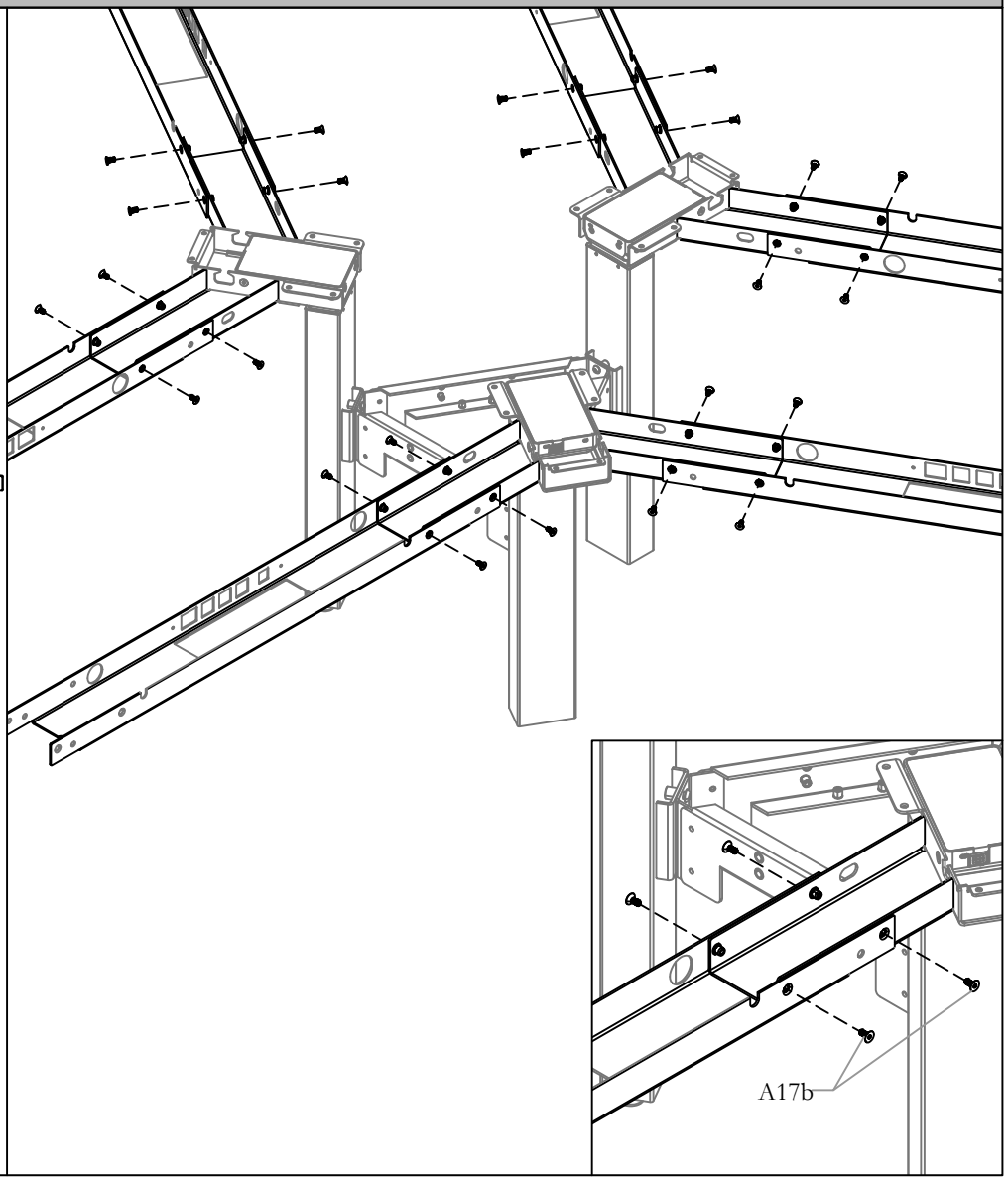

STEP 5: Place Cross Beam as shown. Secure the cross beam using the Screws provided.

INSTALL LEG ASSEMBLIES

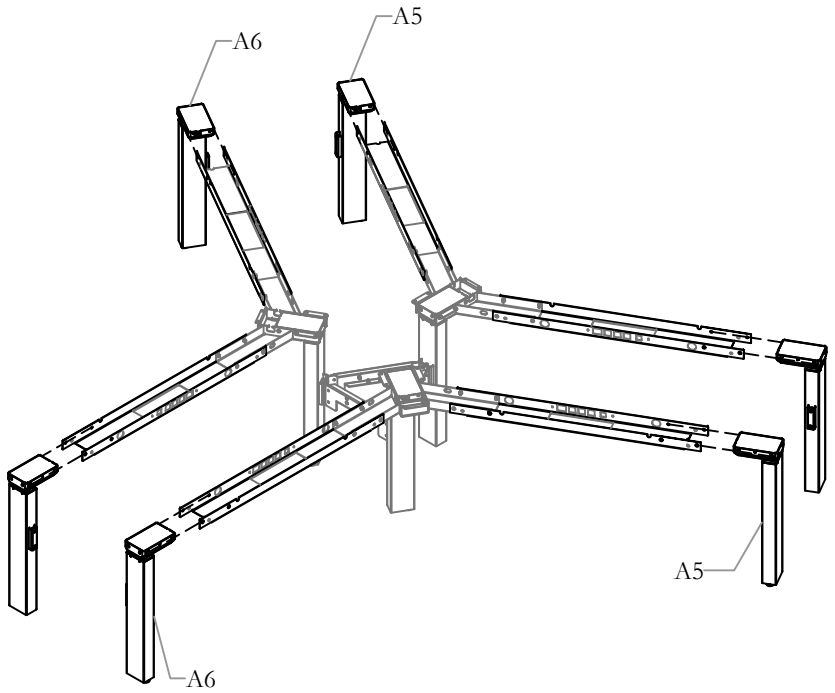

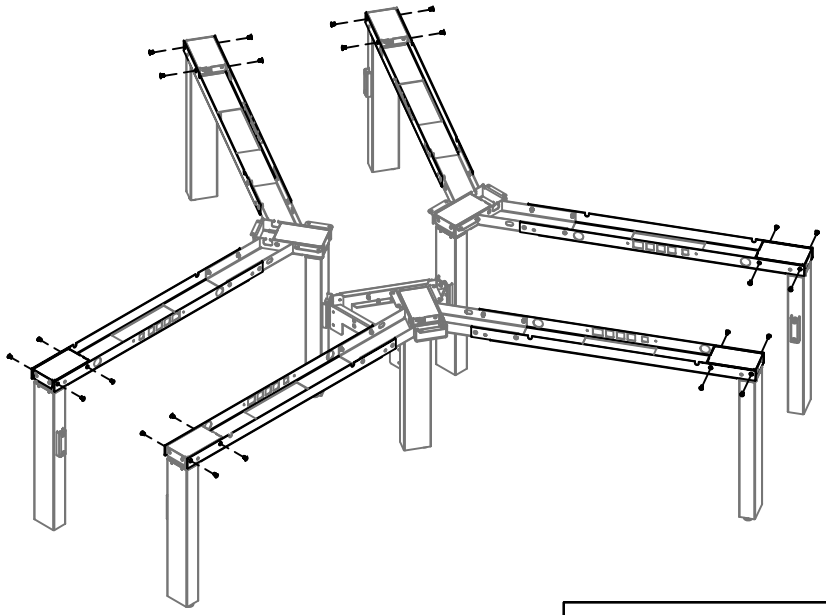

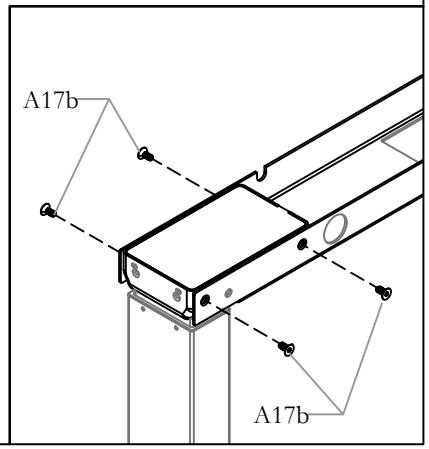

STEP 6: Place Cross Beam into the cross beam. Secure the Leg assemblies using the screws provided.

INSTALL STRETCHER WELDMENT

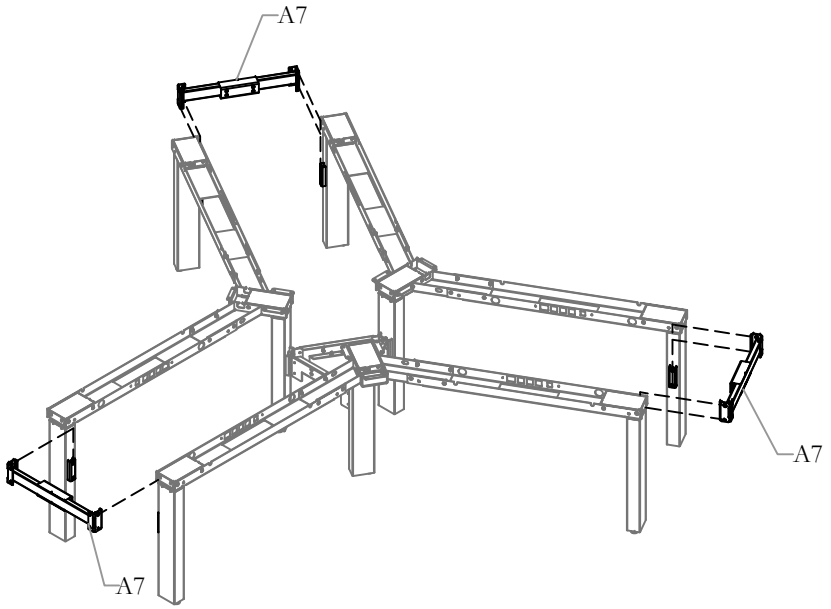

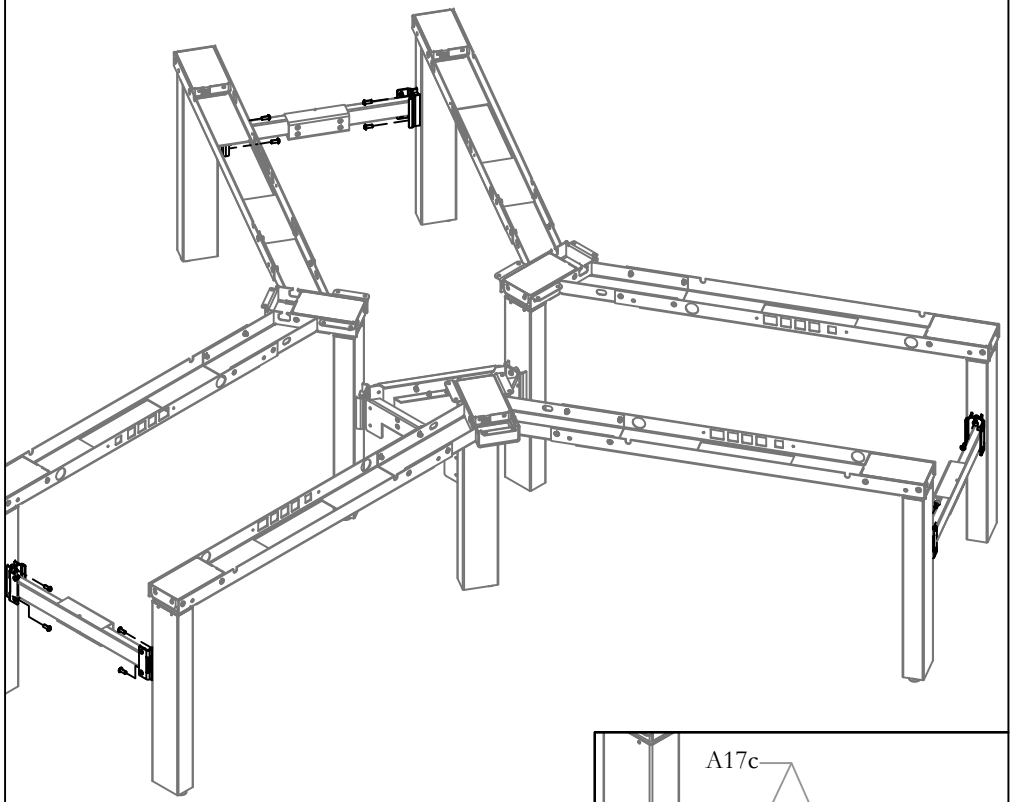

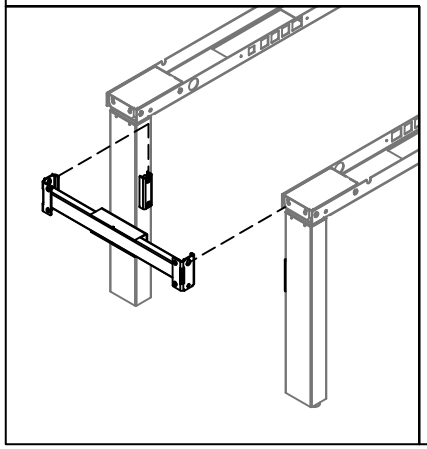

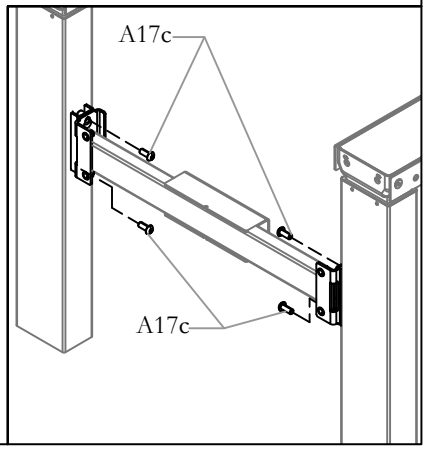

STEP 7: Align Stretcher Weldment as as shown above. Assemble Stretcher weldment with screws provided.

ALIGN LEGS

NOTE: The Unit must be leveled at the exact location of use. If moved after installation or initial leveling, follow Step 1 and Re-align according to the floor profile.

NOTE: Use Laser Mark tool to check alignment.

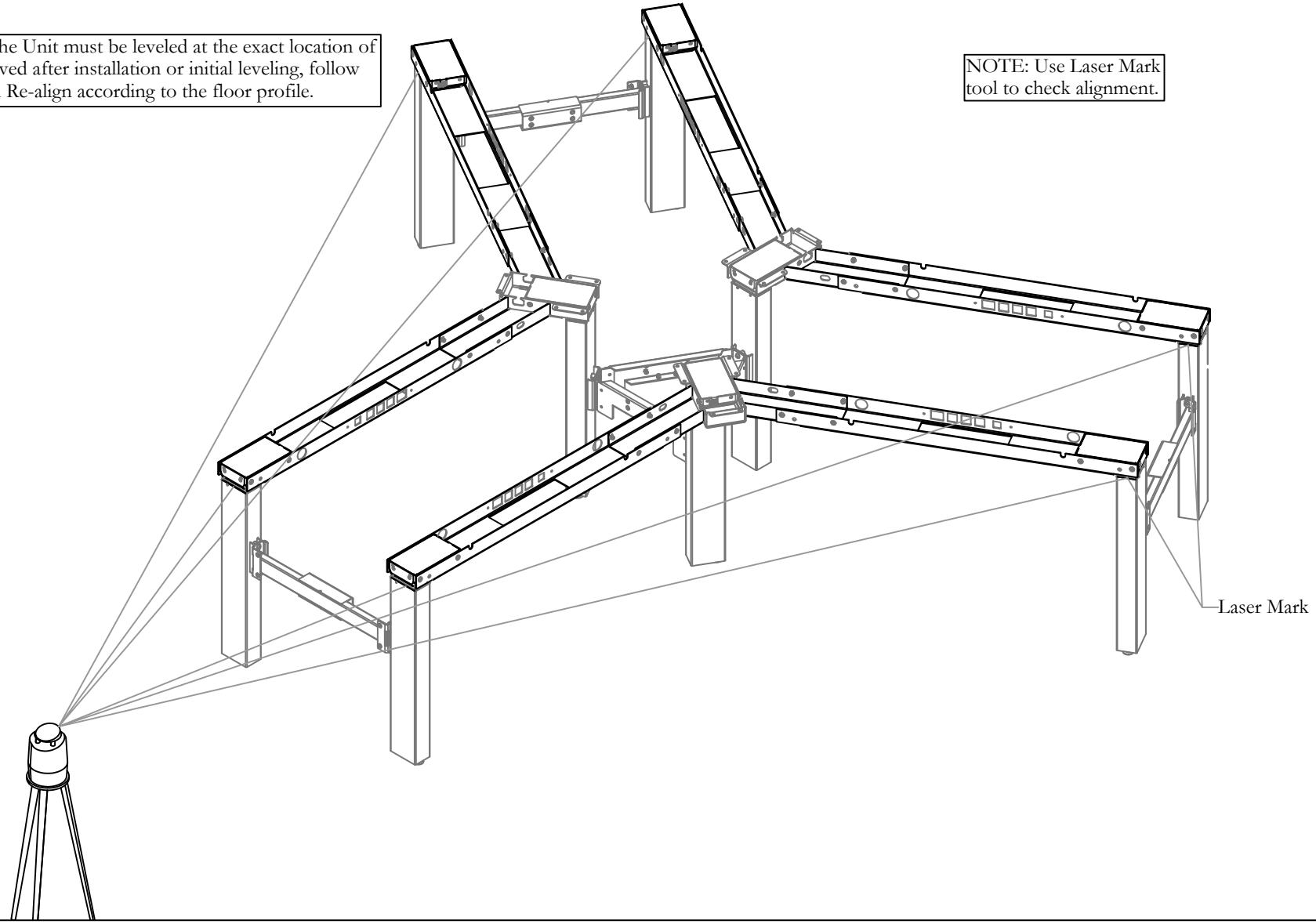

NOTE: Adjust the Levelers to bring the legs into the same horizontal plane determined with the self-leveling laser leveler, before proceeding to the next step. Refer to Step 1 to adjust levelers.

ATTACH STRUTS TO FRAME

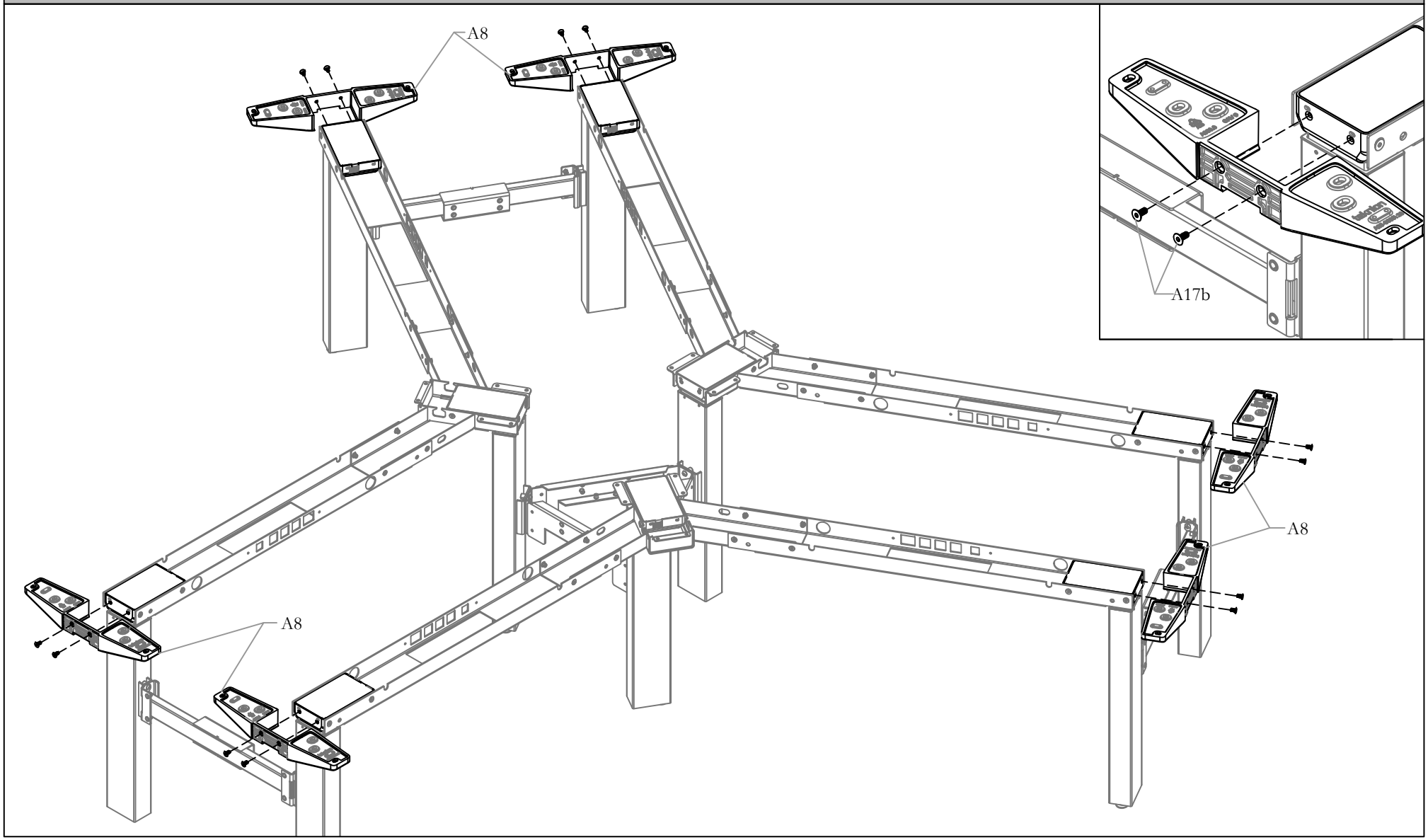

STEP 8: Attach the Struts to the Leg assemblies and Secure it using the Screws provided.

ATTACH STRUT COVERS

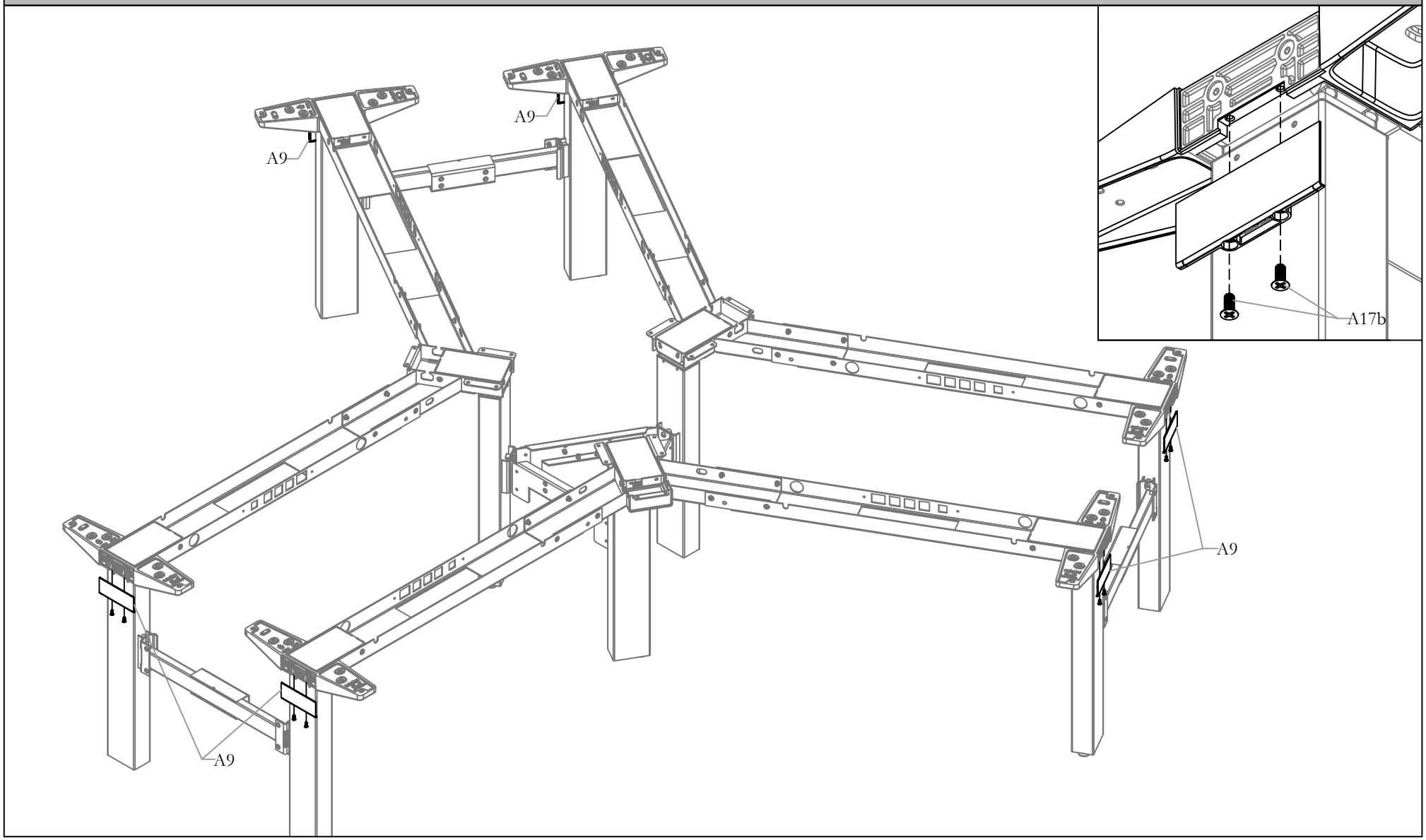

STEP 9: Attach the Strut Covers and Secure it using the Screws provided.

POWER MODULE (OPTIONAL)

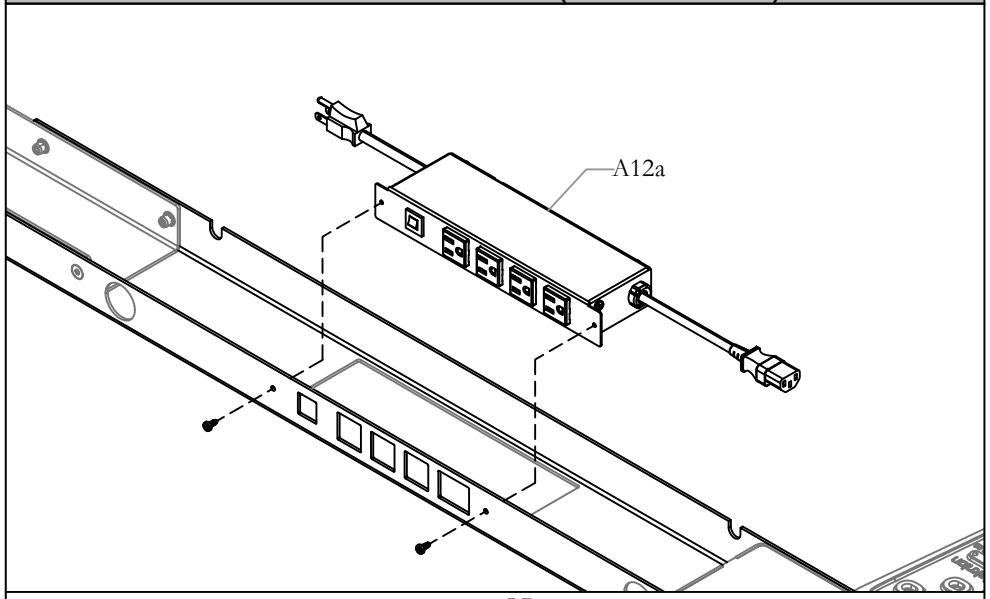

OR

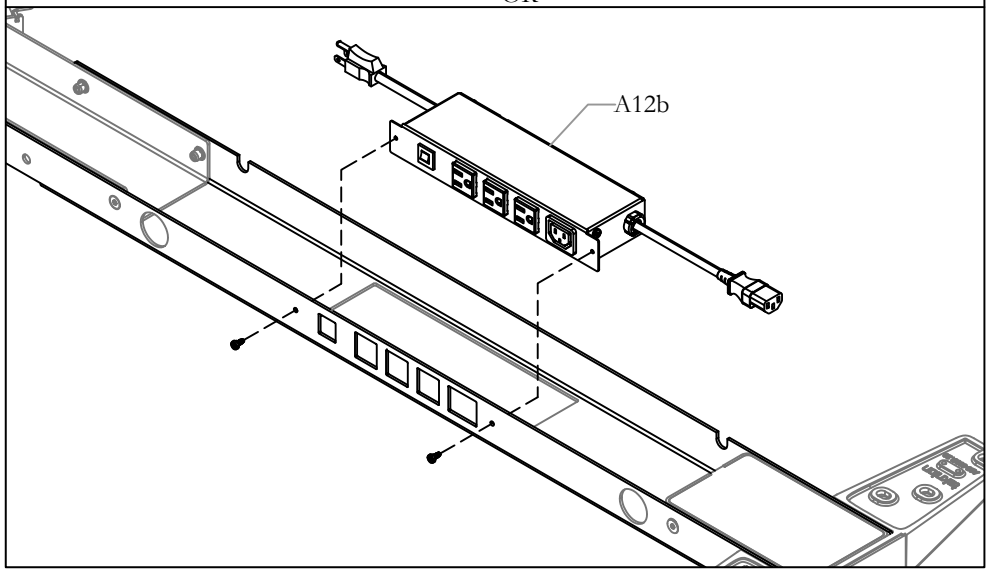

STEP 10a: Attach Power Module as shown above and Secure using the Screws provided.

POWER MODULE COVER (OPTIONAL)

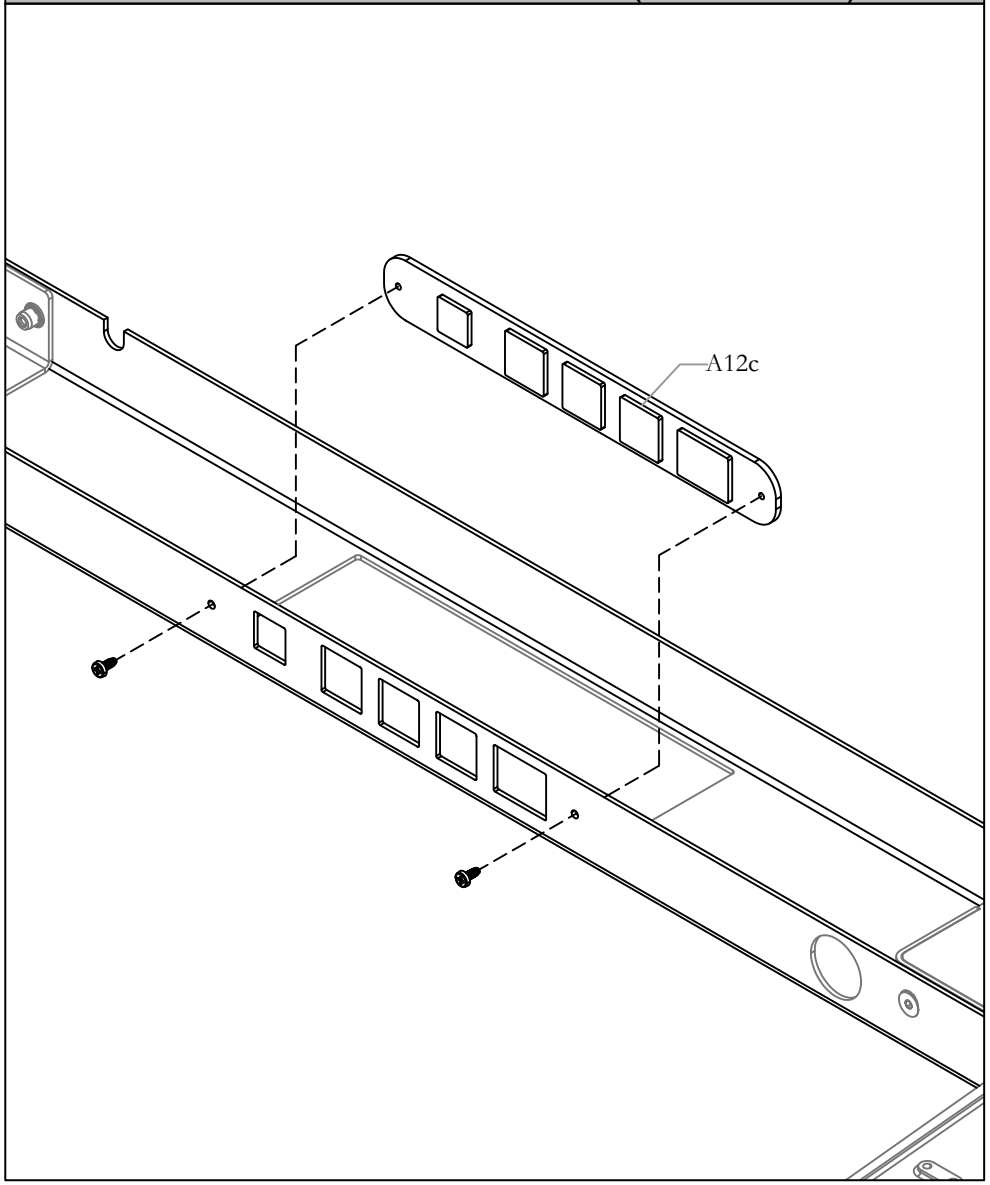

STEP 10b: Attach Power Module Cover as shown above and Secure using the screws provided.

WIRE CONNECTION

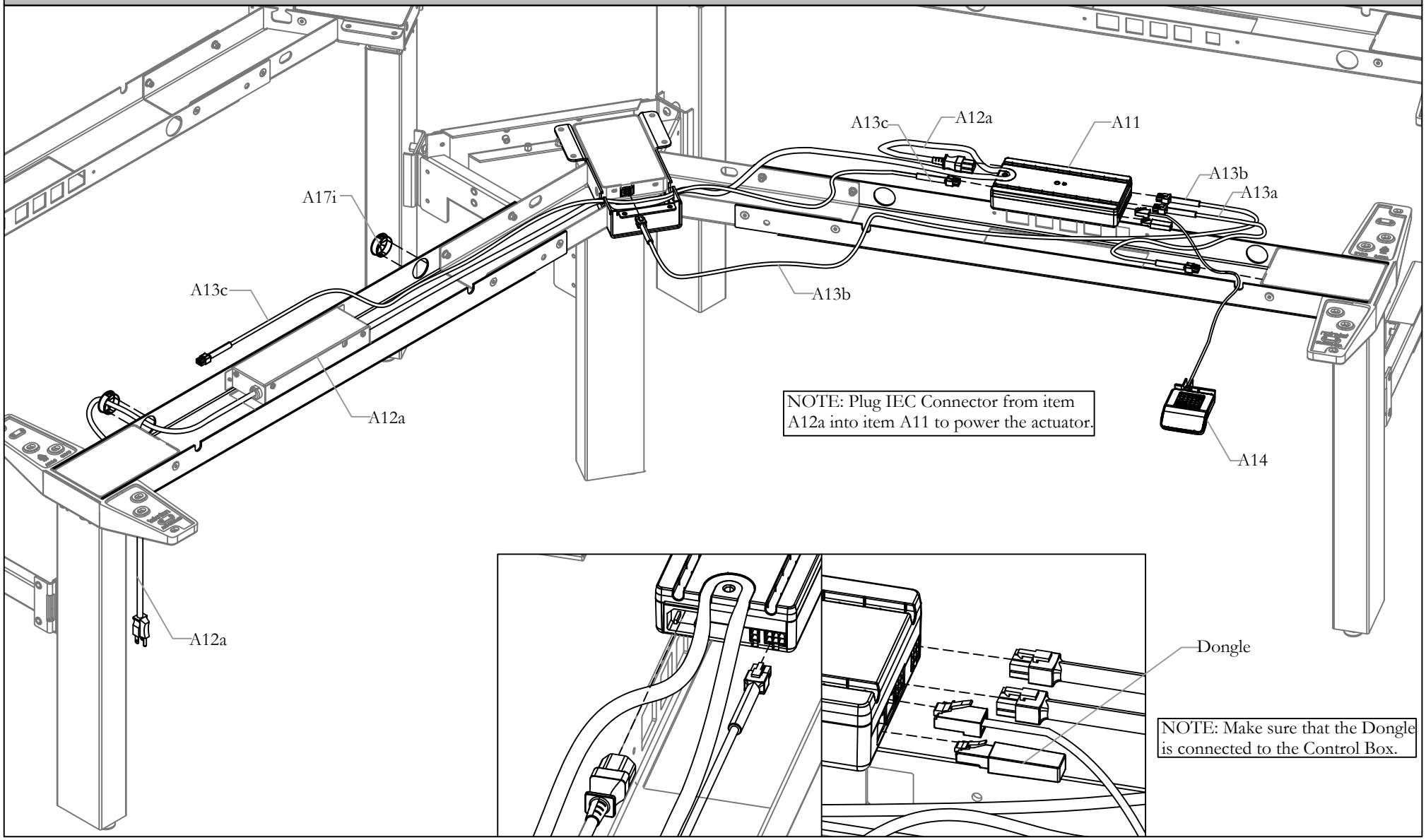

STEP 11: Connect all Wire as shown above.

NOTE: Plug IEC Connector from item A12a into item A11 to power the actuator.

WORKSURFACE AND SWITCH-1

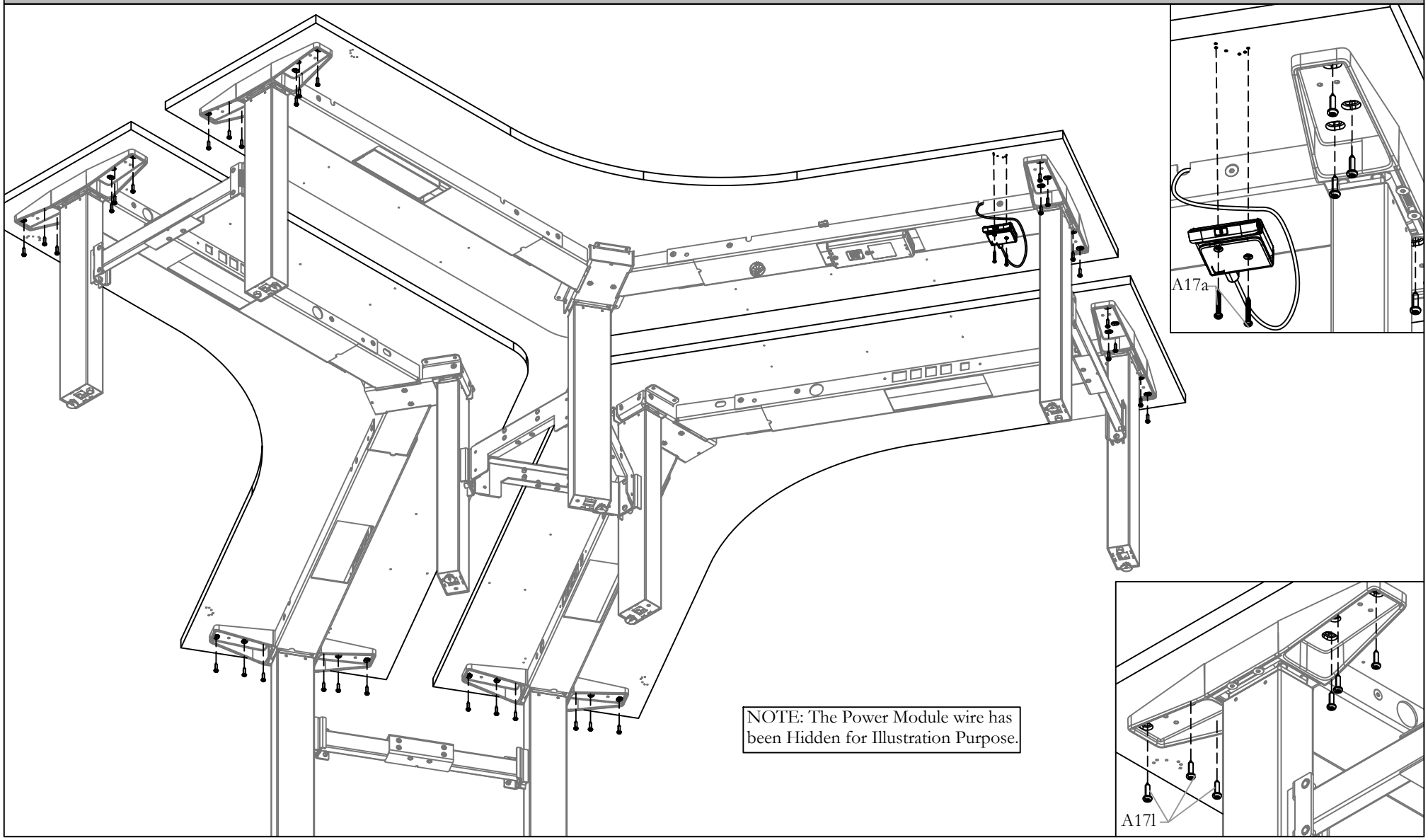

STEP 12: Place Worksurface on the Frame assembly and Fasten with Screws provided. Place the Switch under the Worksurface and Fasten with Screws provided.

WORKSURFACE AND SWITCH-2

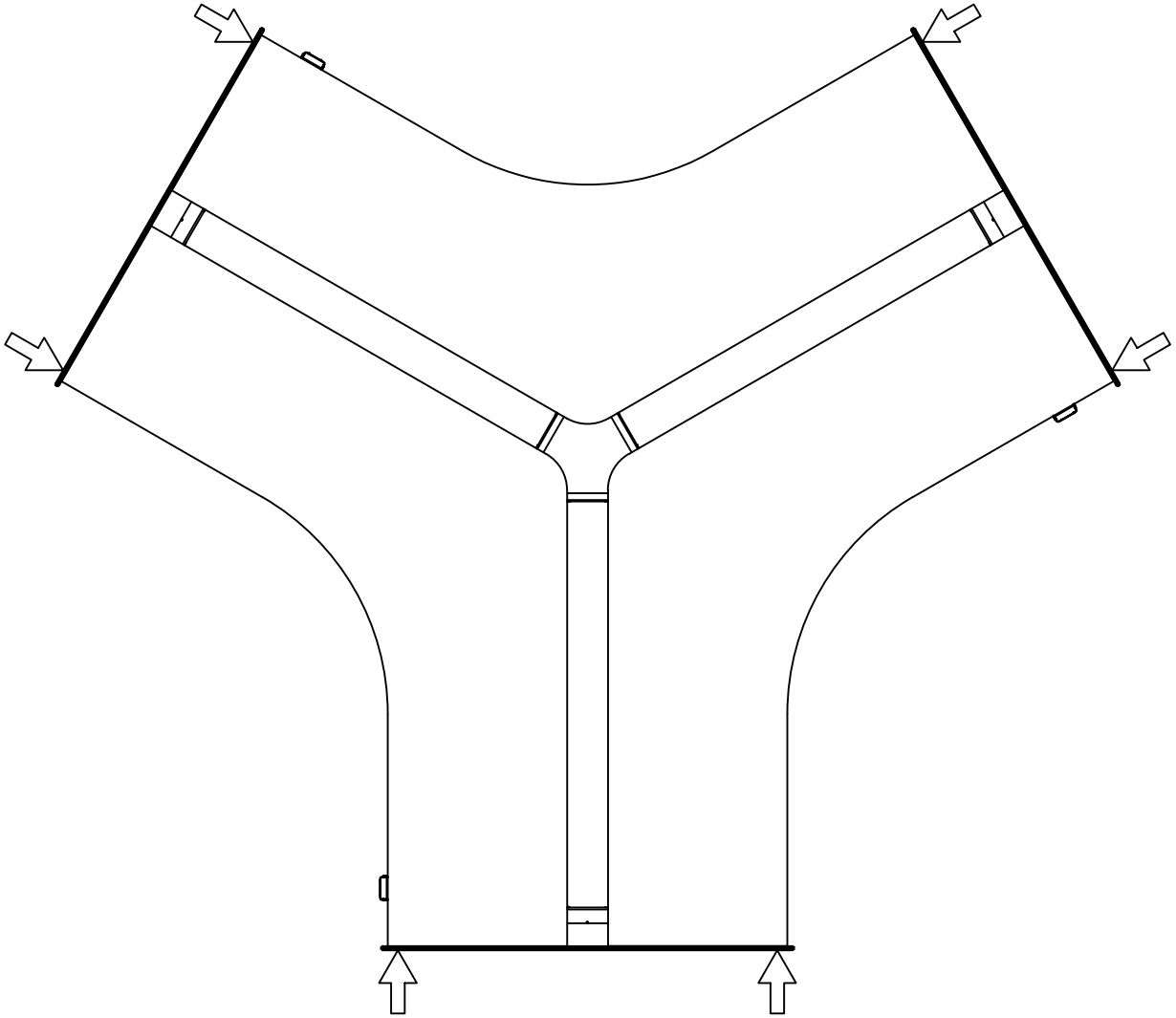

NOTE: Align Top and Side edges of all Worksurfaces.

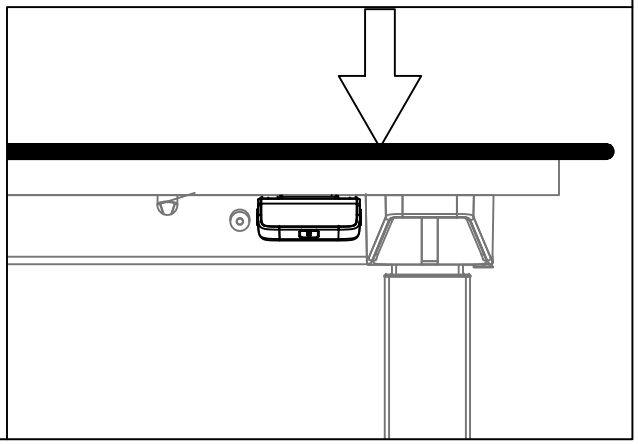

STEP 13: Align the Side edges and Top Surface with other Worksurfaces.

WORKSURFACE AND SWITCH-3

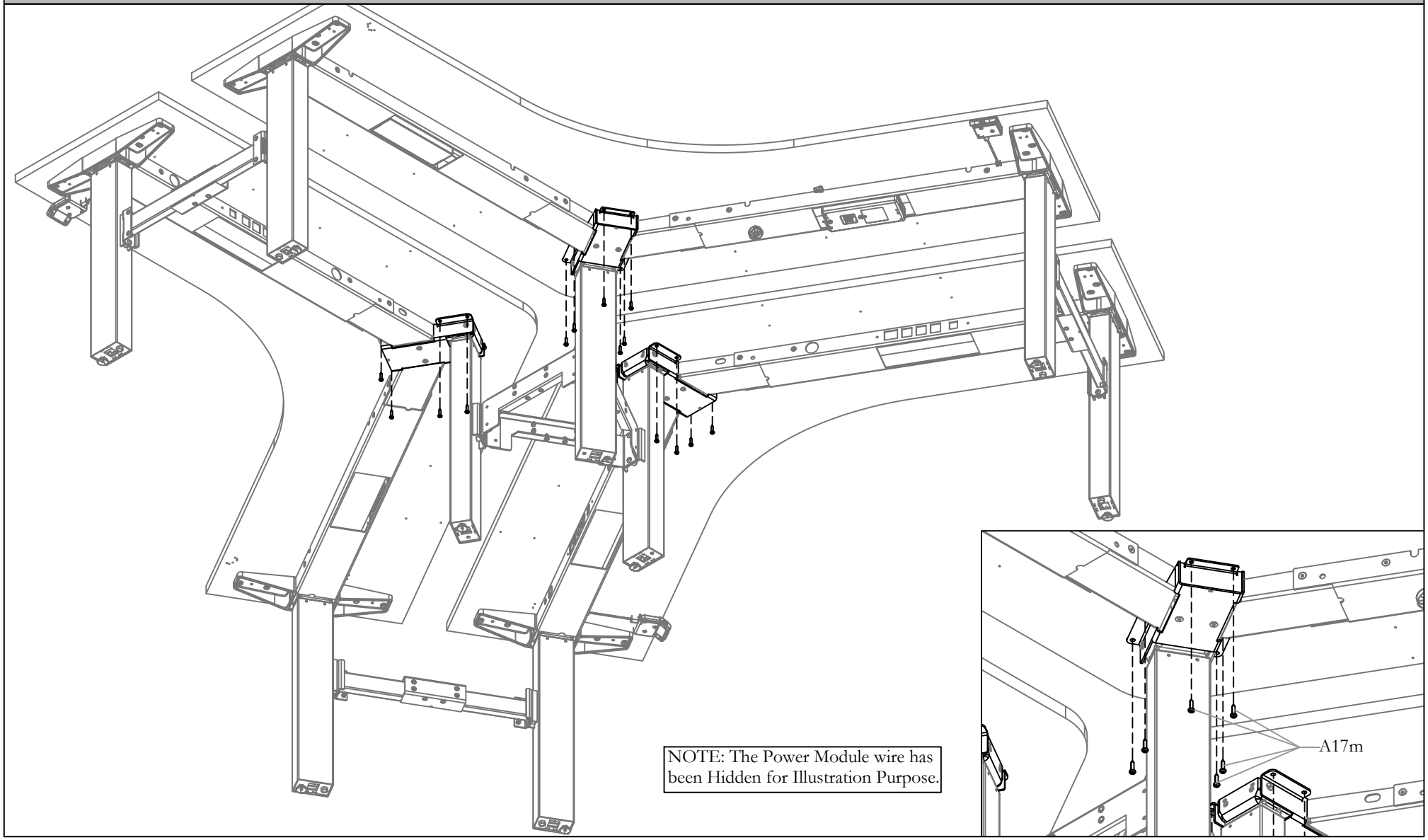

STEP 14: Fasten Worksurfaces with the Frame assembly.

ATTACH CONTROL BOX COVER

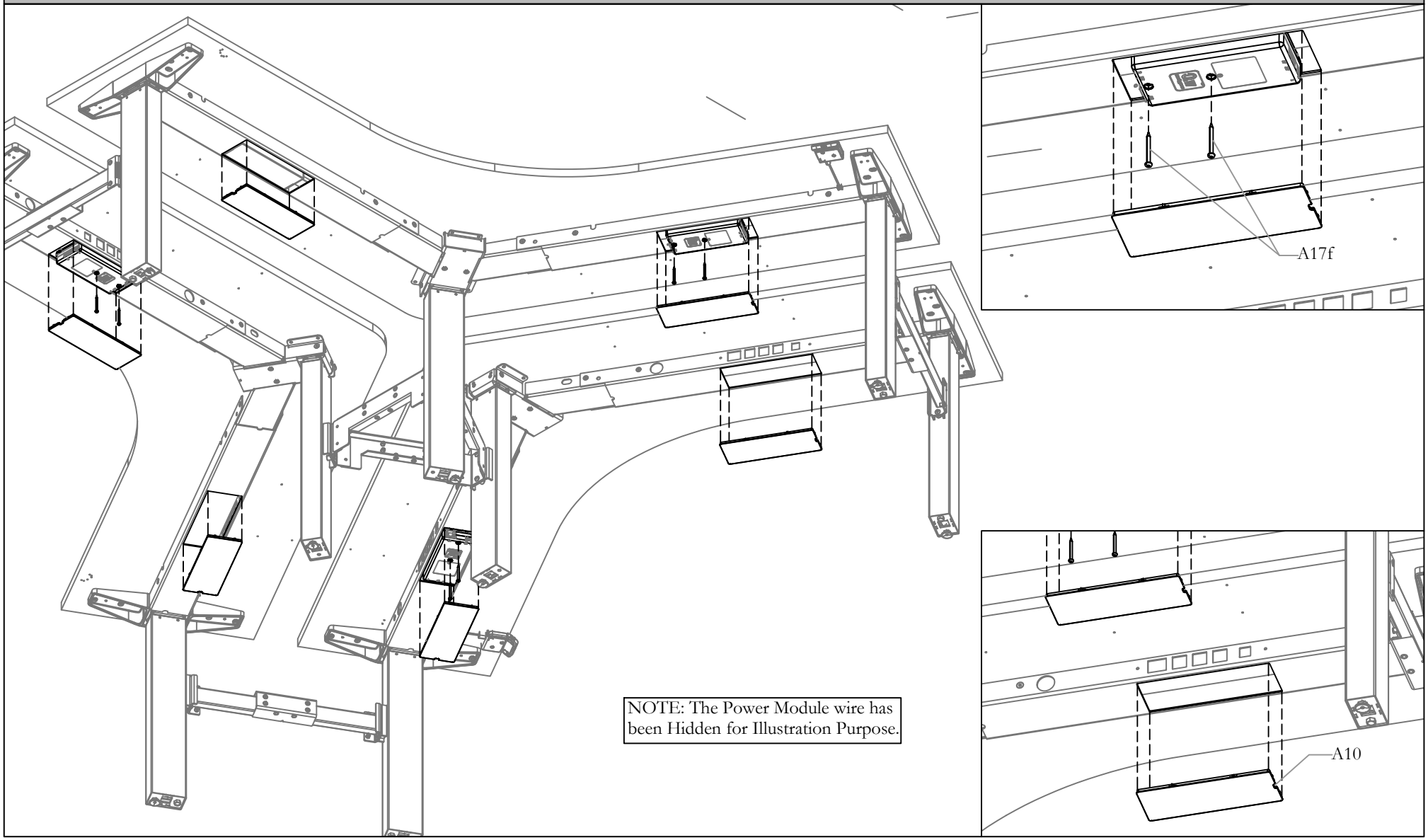

STEP 15: Secure the Control Box to the Worksurfaces using the Screws provided. Then Attach the Control Box cover to the Cross Beam.

ATTACH FELT COVER CABLE ORGANIZER

NOTE: If YEYA is specified, refer to Complement Guide COM_151a.

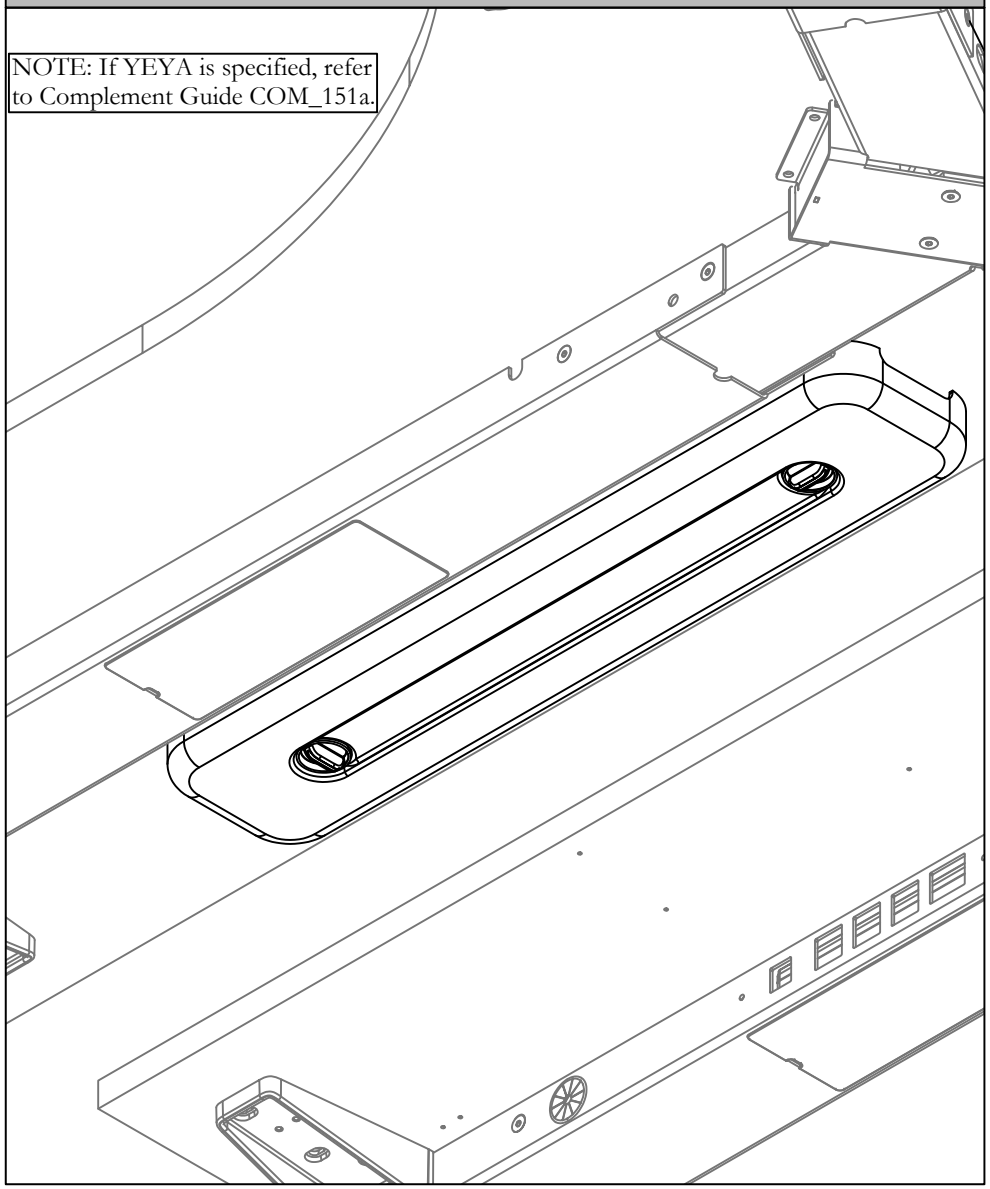

STEP 16a: If YEYA is specified, refer to Complement Guide COM_151a.

ATTACH DUAL PLASTIC TRAY CABLE MANAGEMENT

NOTE: If YEYS is specified, refer to Complement Guide COM_151b.

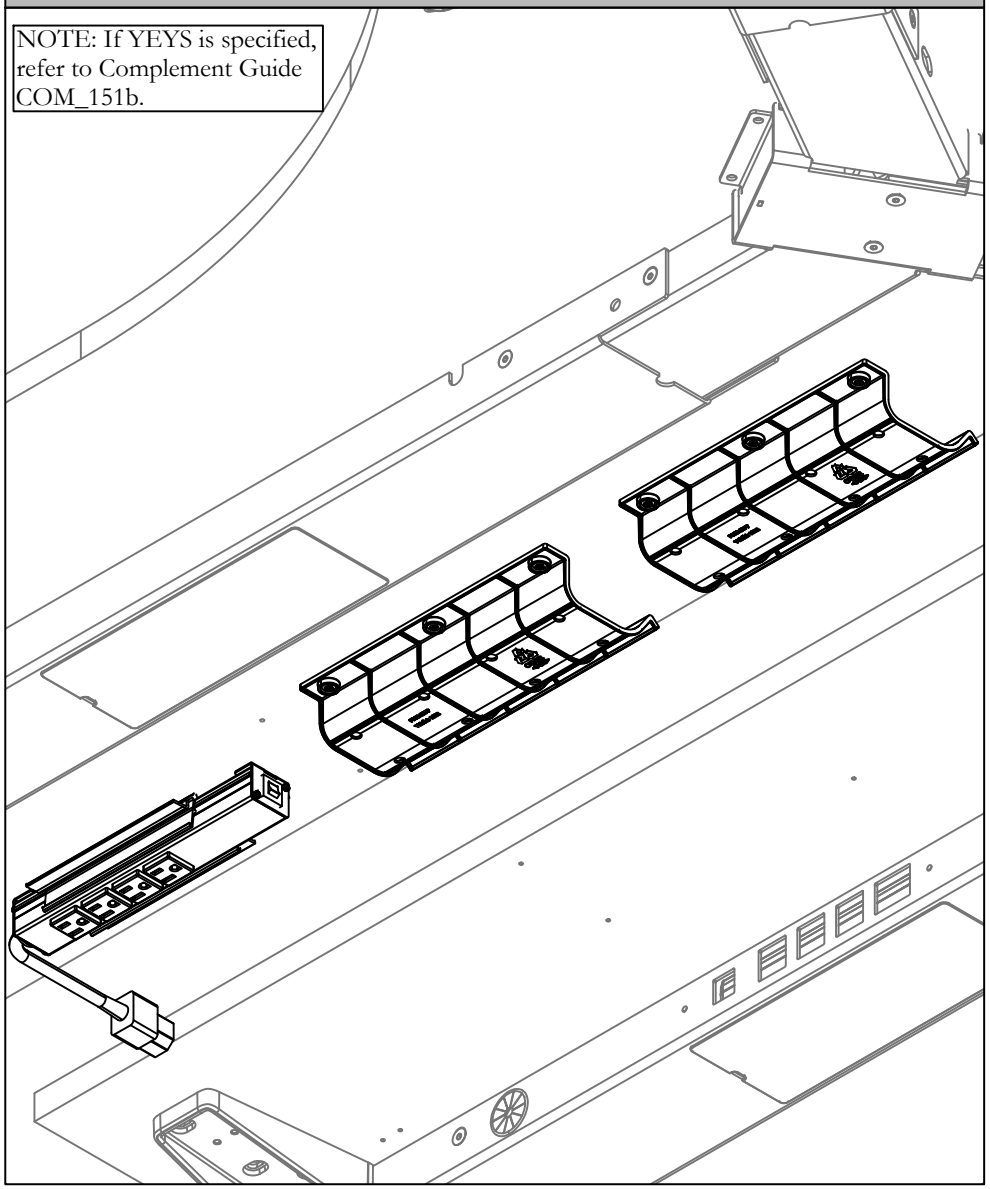

STEP 16b: If YEYS is specified, refer to Complement Guide COM_151b.

Navigate Single-Sided HA Frame (HNBFNZ), Navigate Rectangular Worksurface (HNBWRS), Navigate Rectangular Extended Worksurface (HNBWES)

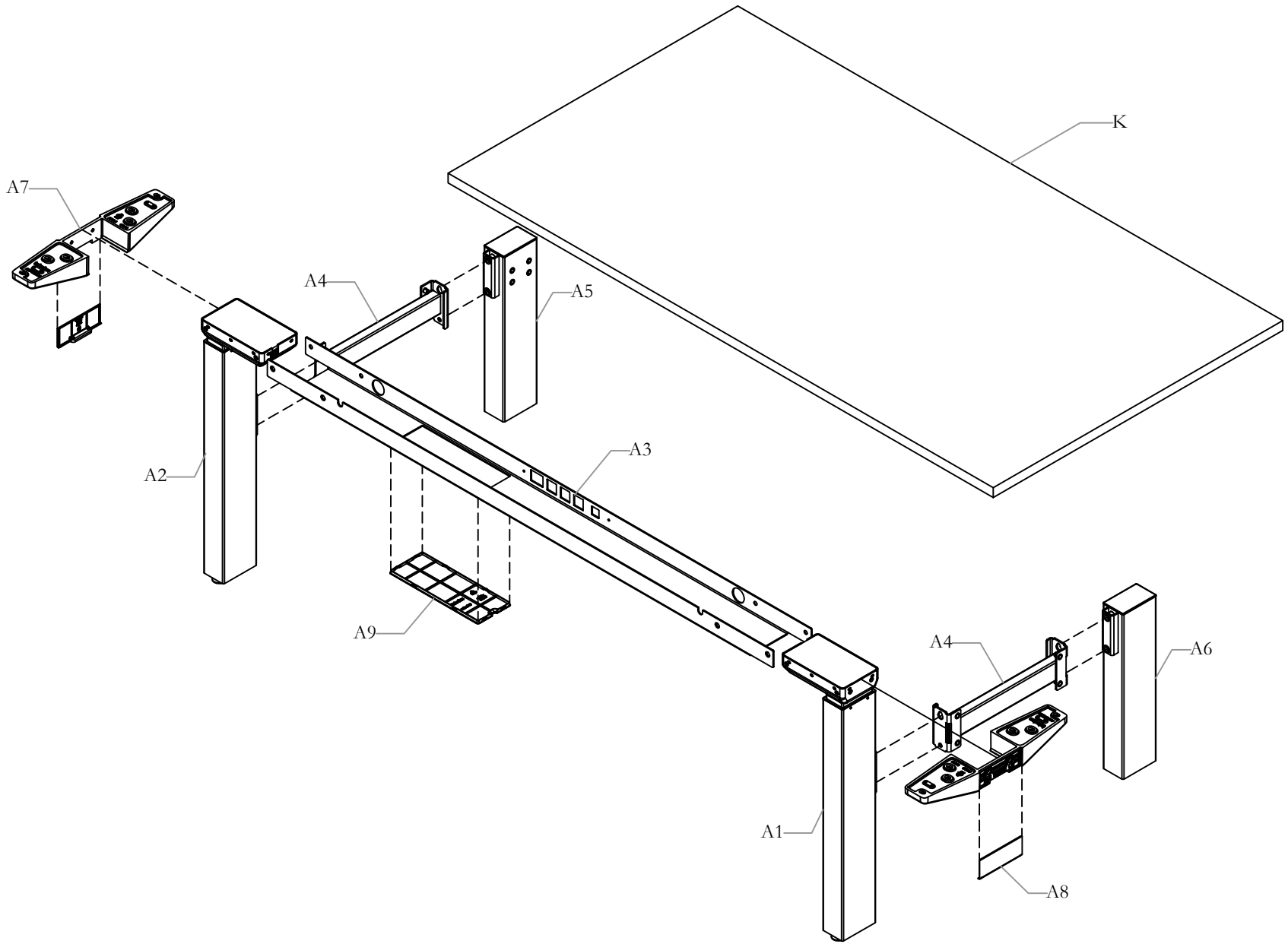

Part and Product Identification

Navigate Single Sided Std. Range Electric Frame (HNBFNZ)x1

A - Frame Assembly (N09-9082) x1 or (N09-9070) x1

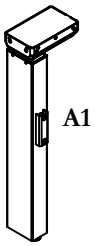

A1 - Navigate HAB Leg Assy (N09-8583L) x1

OR



Navigate HAB Leg Assy, Extended (N09-8585_L) x1



A2 - Navigate HAB Leg Assy (N09-8583R) x1

OR



Navigate HAB Leg Assy, Extended (N09-8585_R) x1

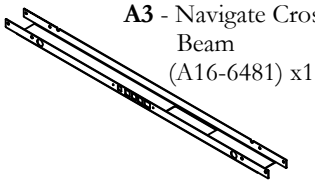

A3 - Navigate Cross Beam (A16-6481) x1

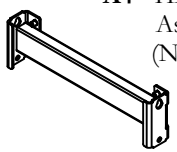

A4 - HAB Stretcher Assembly (N09-8606) x2

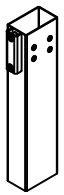

A5 - Single Sided Bench Rear Leg Assy (N09-8573L) x1

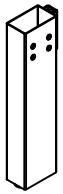

A6 - Single Sided Bench Rear Leg Assy (N09-8573L) x1

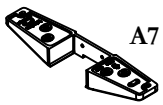

A7 - Navigate Strut (A25-0630) x2

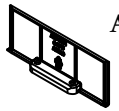

A8 - Navigate Strut Cover (A25-0631) x2

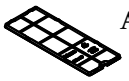

A9 - Control Cover (B02-0739) x1



A10 - Navigate Control Module (N09-8185) x1

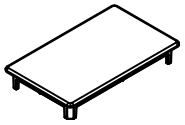

A11 - Leg Top Cap (A25-0668) x2

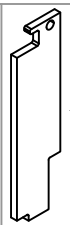

A12 - Counter Weight (A25-7750) x0 or x8

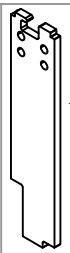

A13 - Counter Weight, Tall 1/2" (A16-13119) x0 or x8



A14 - Counter Weight, Tall 1/8" (A16-13121) x0 or x2

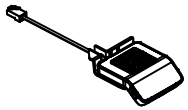

A15 - Navigate Digital Switch (N09-8183) x1

OR

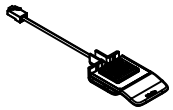

A16 - Navigate Simple Switch (N09-8192) x1

OR



A17 - Display Switch w/ Up/Down Memory (N09-5600)x1

OR



A18 - Linak Up/Down Switch (N09-5796) x1

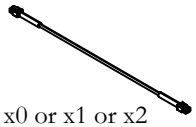

A19 - Motor Cable PVC -500 mm (N09-8402\05) x0 or x1 or x2

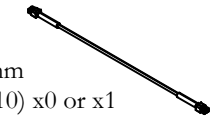

A20 - Motor Cable PVC -1000mm (N09-8402\10) x0 or x1

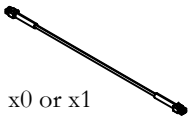

A21 - Motor Cable PVC -2000mm (N09-8402\20) x0 or x1

A22 - Hardware Kit (X05-0478)x1

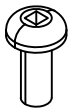

A22a - Screw 1/4-20x5/8, QD MCHN (E01-0992) x12



A22b - M6x1, 14mm Flat Head Screw (E01-1249) x16

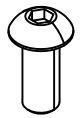

A22c -Machine Screw 5/16-18 x 3/4, Socket Screw (E01-1035) x4



A22d - M5x0.8-10, Flat Head Screw (E01-0989) x4



A22e - 3/16" Wire Clamp (B02-0598) x4



A22f - Cable Clamp 3/8" (B02-0558) x5

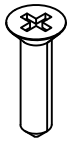

A22g - Flat Quad Wd Screw (E04-0090) x9



A22h - #10 Pan Quad Screw (E01-1009) x2

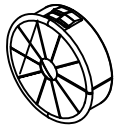

A22i - Grommet Bushing (B02-0557) x2

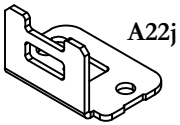

A22j - Linak Memory 90 Deg Mounting Brkt (A16-3970) x1

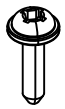

A22k - Wd Screw Pan Quad #8x5/8" (E04-0091) x2

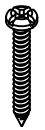

A22l - #8x1 1/4" Wd Screw (E04-0074) x2

Part and Product Identification

Navigate Single Sided Std. Range Electric Frame (HNBFNZ) x1

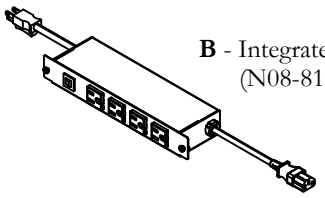

B - Integrated Power Bar (N08-8157) x1

OR

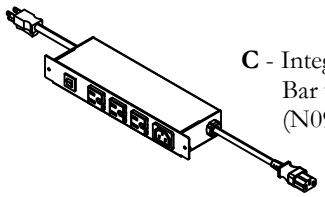

C - Integrated Power Bar w/ IEC (N09-8737) x1

OR

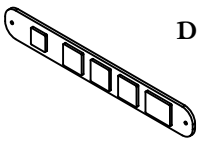

D - Power Bar Hole Cover (B02-0736) x1



E - 8 x 0.375" Screw (E07-0158) x0 or x2

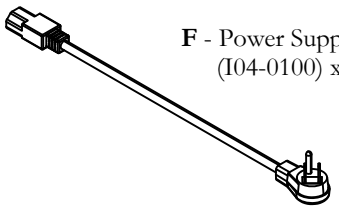

F - Power Supply (I04-0100) x0 or x1

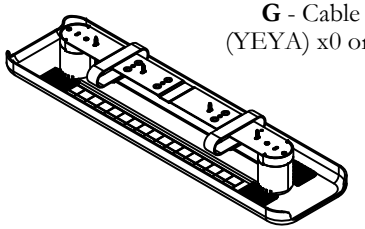

G - Cable Felt Organizer (YEYA) x0 or x1

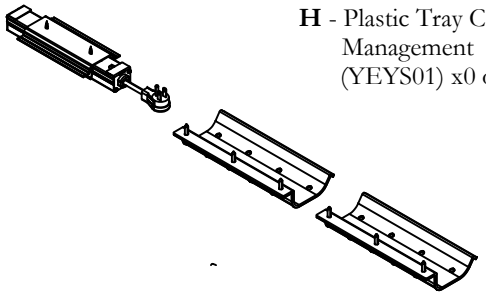

H - Plastic Tray Cable Management (YEYS01) x0 or x1

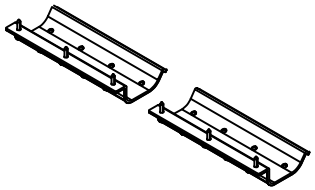

I - Plastic Tray Cable Management (YEYS02) x0 or x1

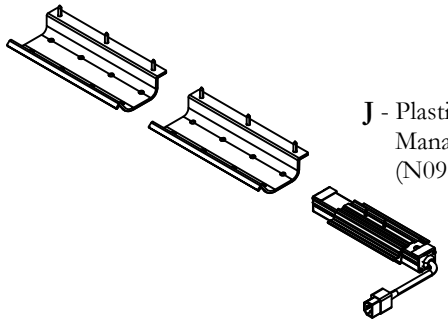

J - Plastic Tray Cable Management w/ IEC (N09-9781) x0 or x1

Worksurface

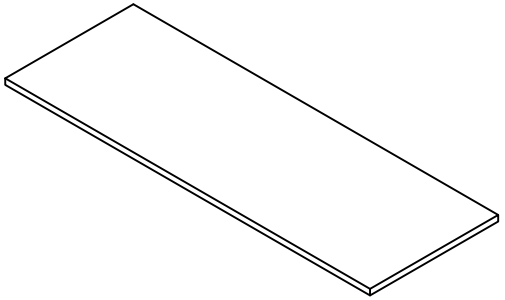

K - Navigate Rectangular Worksurface HAB (HNBWRS) x1

OR

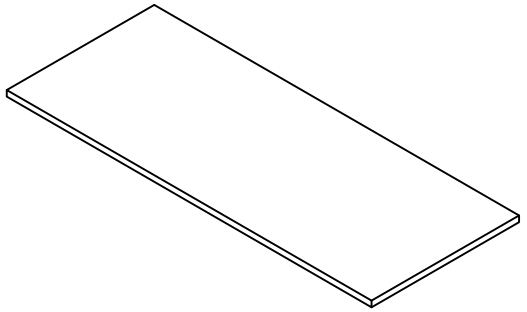

L - Navigate Rectangular Worksurface HAB Extended (HNBWES) x1

INSTALL HEIGHT-ADJUSTABLE LEGS

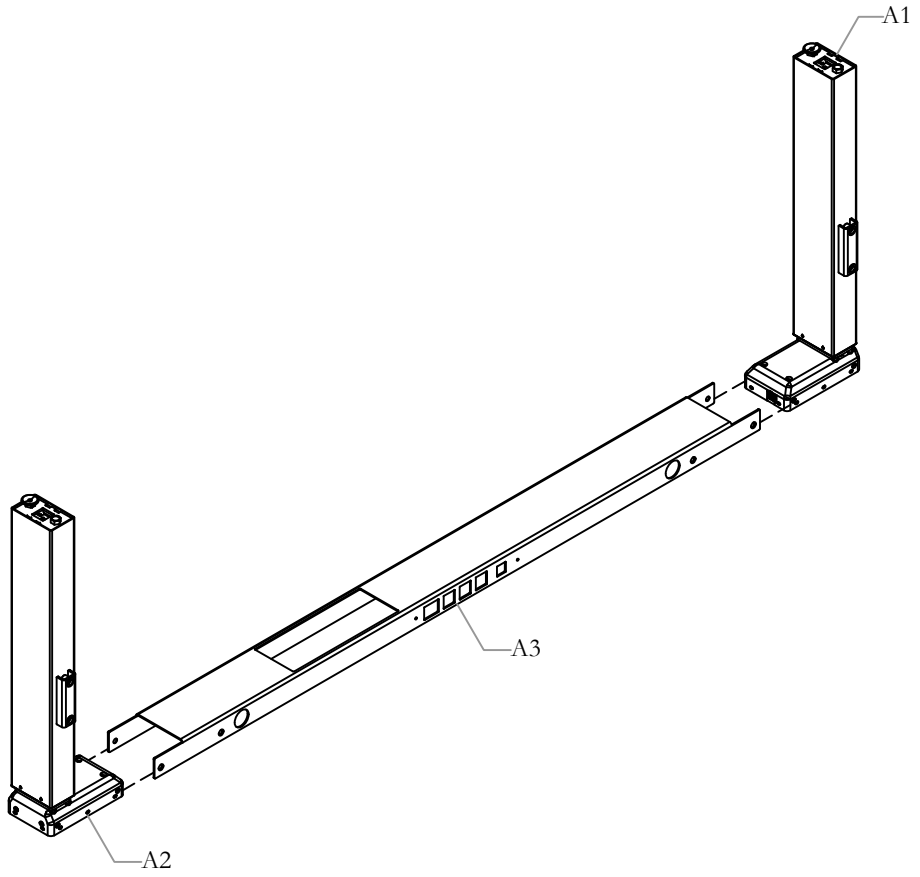

STEP 1: Slide Height-Adjustable legs into the cross beam as shown above.

FASTEN SCREWS TO SECURE LEGS

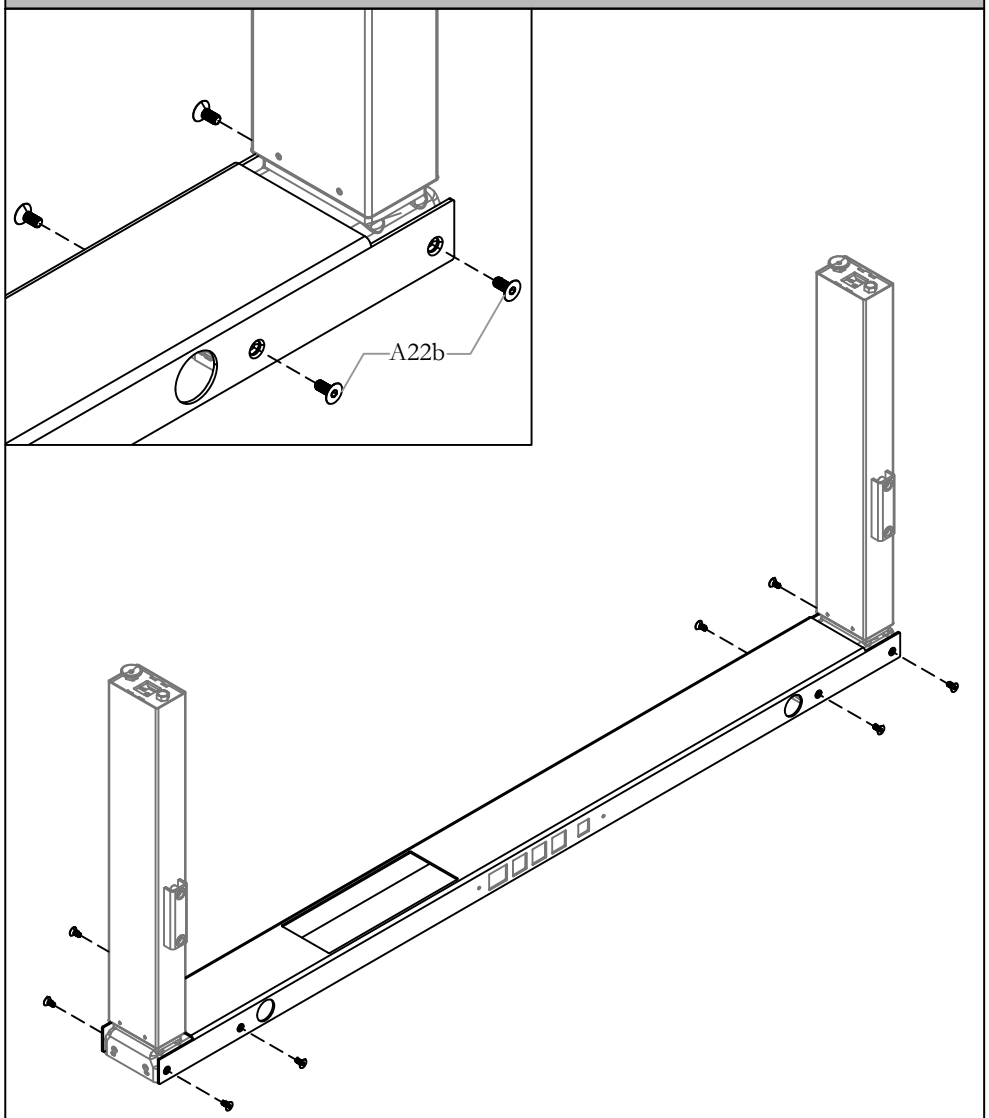

STEP 2: Fasten screws to secure legs to Top Channel.

ALIGN LEGS

NOTE: Use laser mark tool to check alignment.

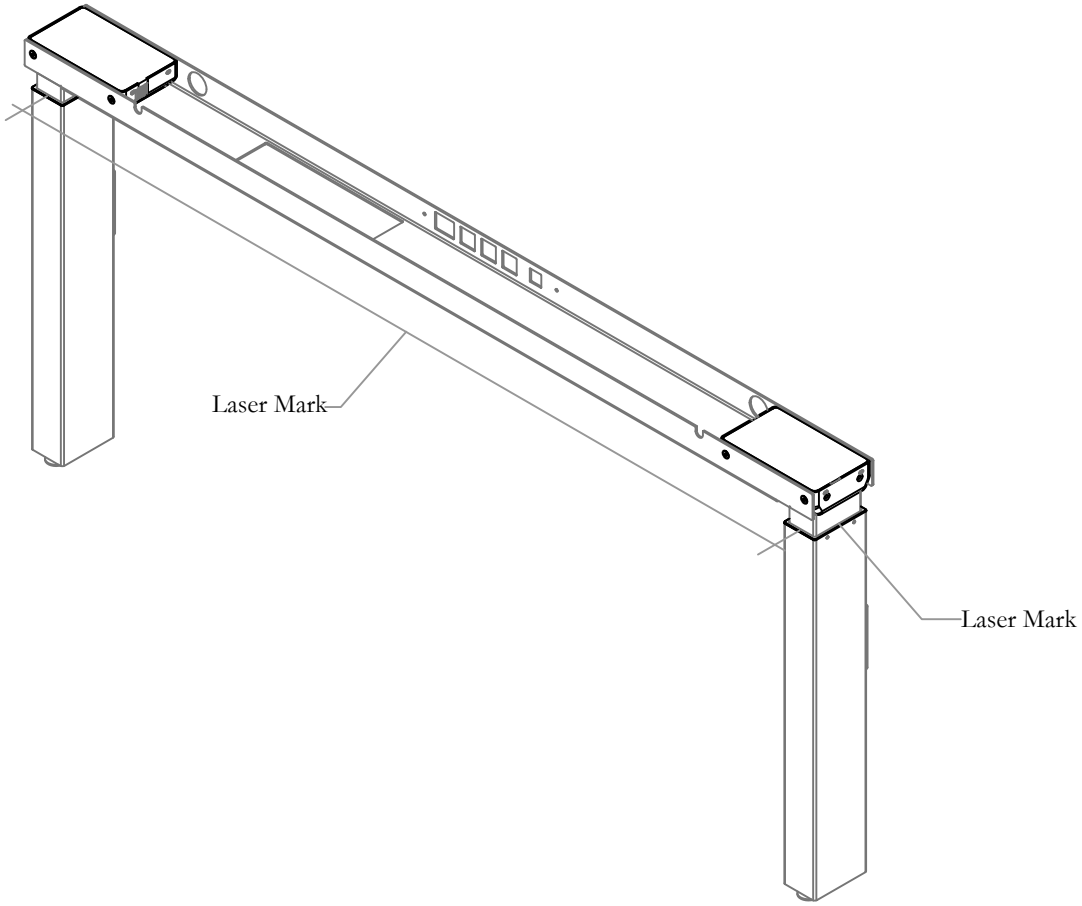

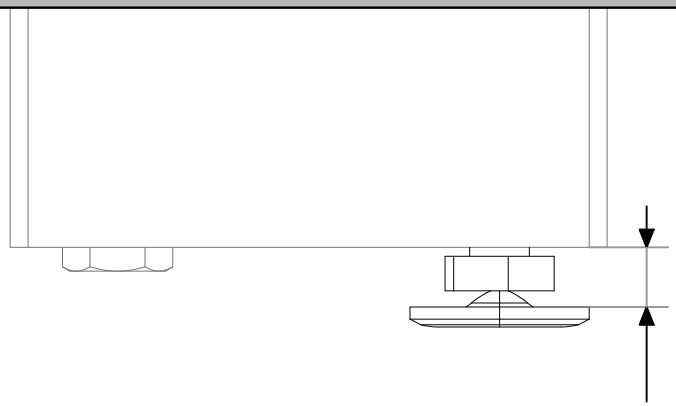

NOTE: Align laser mark as shown above before proceeding to the next step. If misaligned, adjust levelers.

ATTACH STRUT

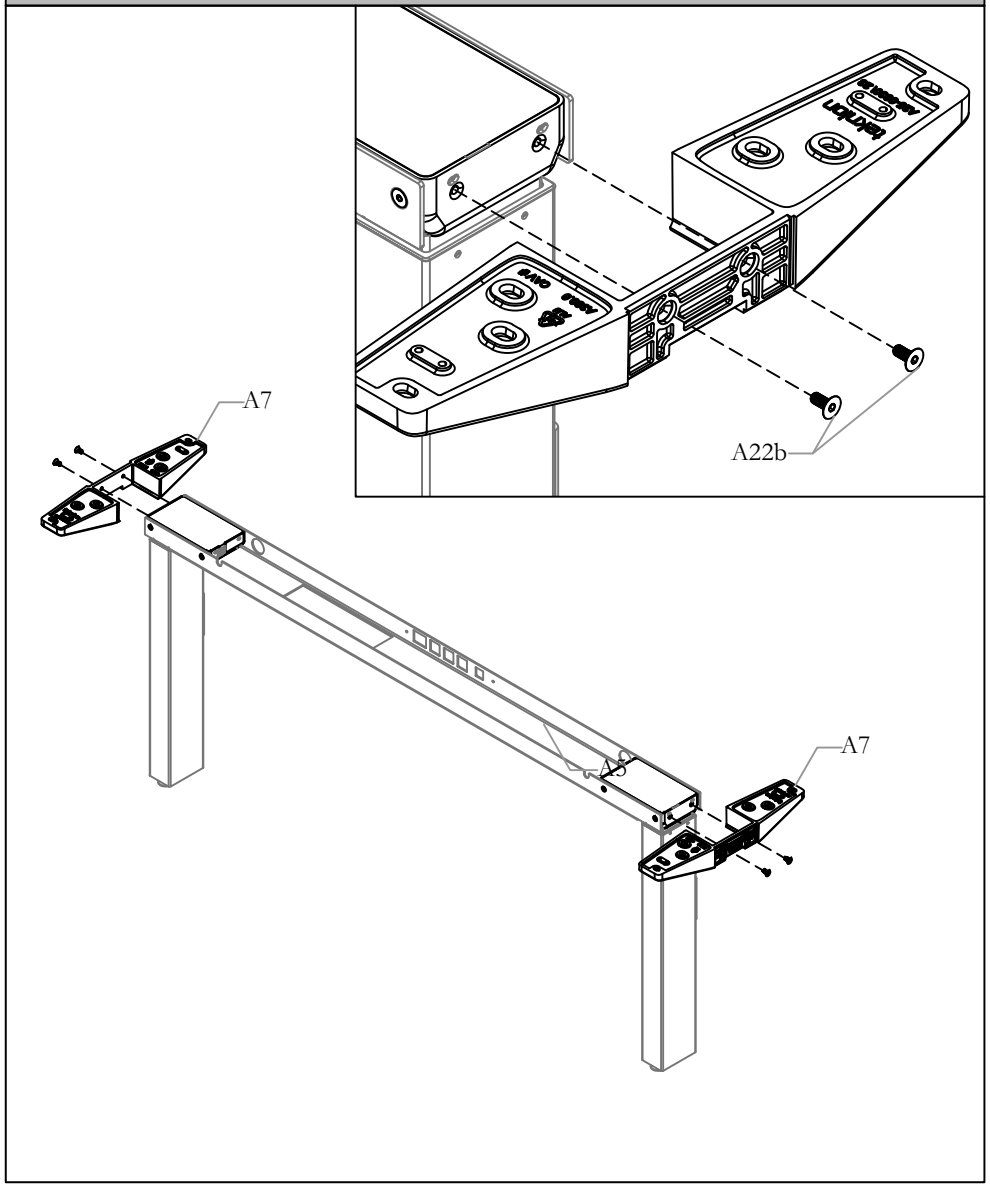

STEP 3: Attach Struts to all leg assemblies and Secure using the screws provided.

ATTACH STRUT COVERS

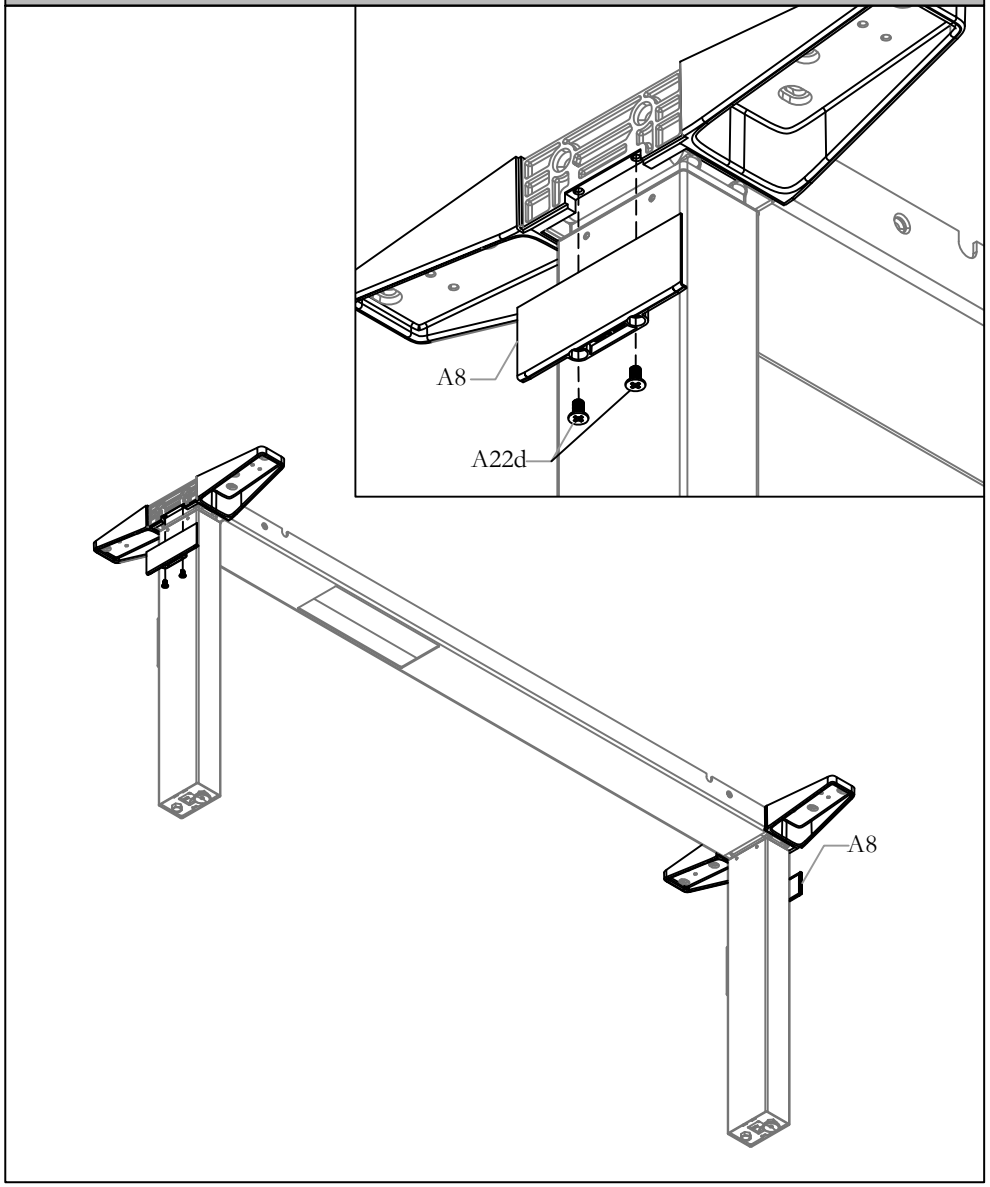

STEP 4: Attach Strut covers to struts installed and secure with screws provided.

ATTACH STRETCHER

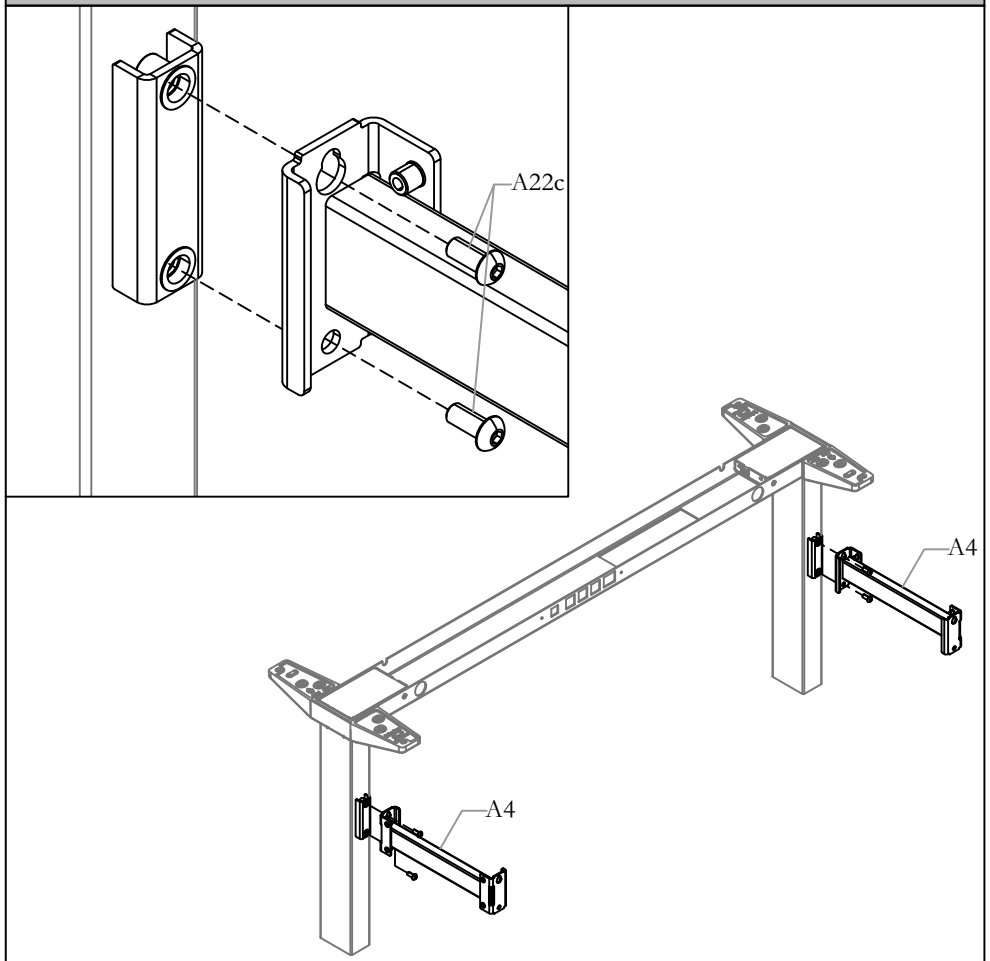

STEP 5: Attach Stretchers to the Frame as shown above and and Secure using the screws provided.

REMOVE LEG COVER & ADD COUNTER WEIGHTS

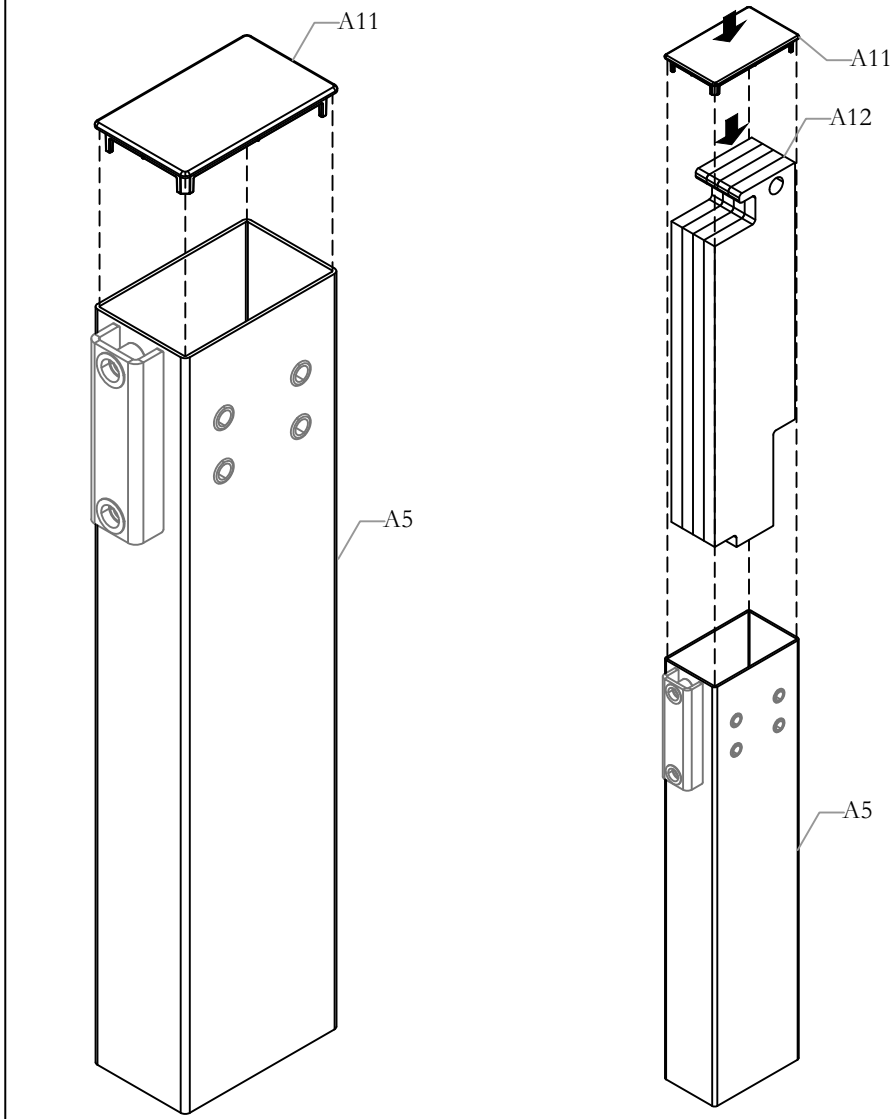

STEP 6: Remove covers from Rear Legs. Place Counter weights inside Rear Legs for Counterbalance.

NOTE: For frames with extended electric (9C&9E) that are 30" in depth and 76" or greater in width, use 4 Tall 1/2"(A13) and 1 Tall 1/8"(A14) Counter Weights per Rear Leg.

ATTACH REAR LEGS TO STRETCHER BARS

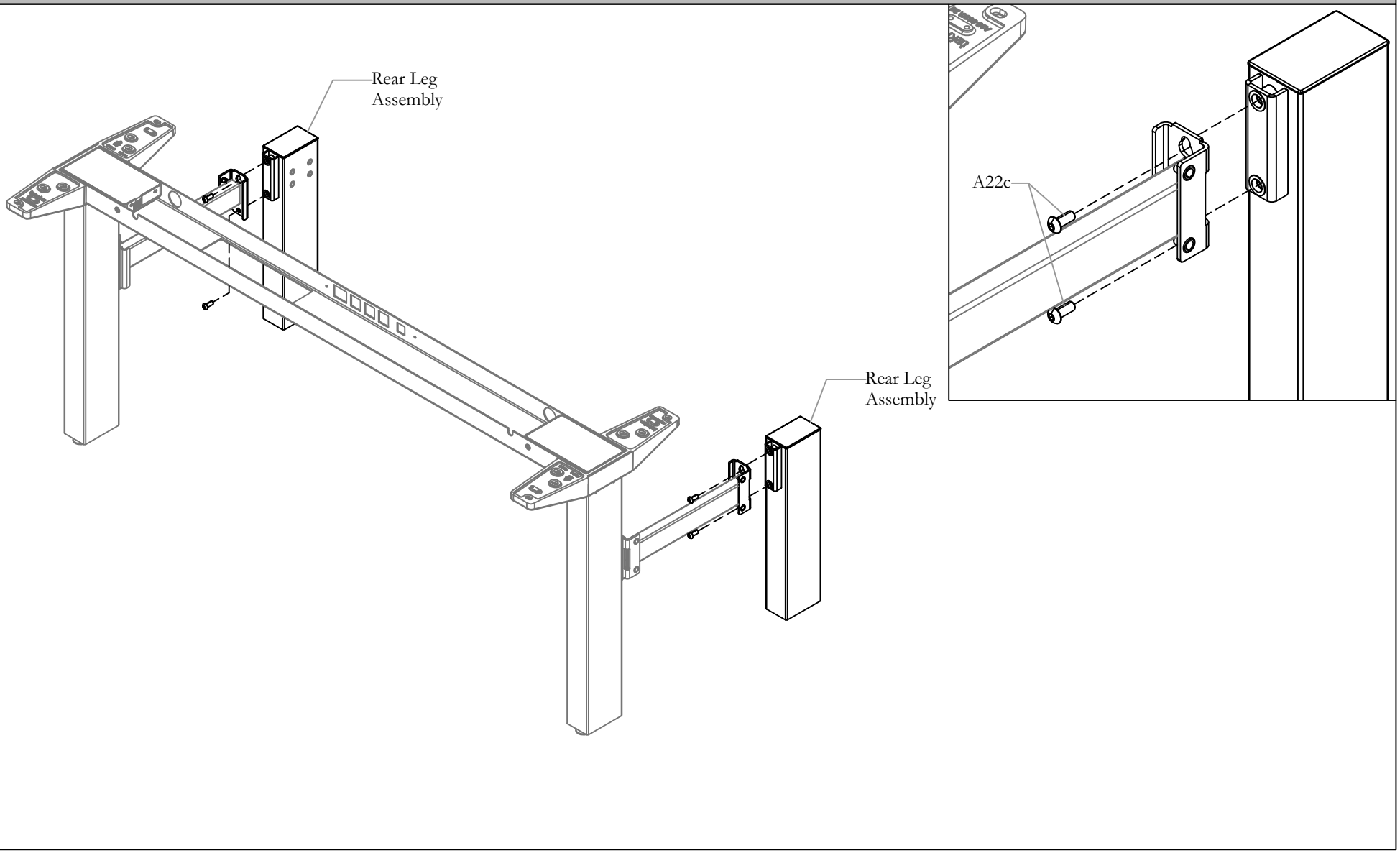

STEP 7: Attach Rear Legs to the Stretcher bars and secure it using the screws provided. Adjust levelers if needed.

ATTACH POWER MODULE (OPTIONAL)

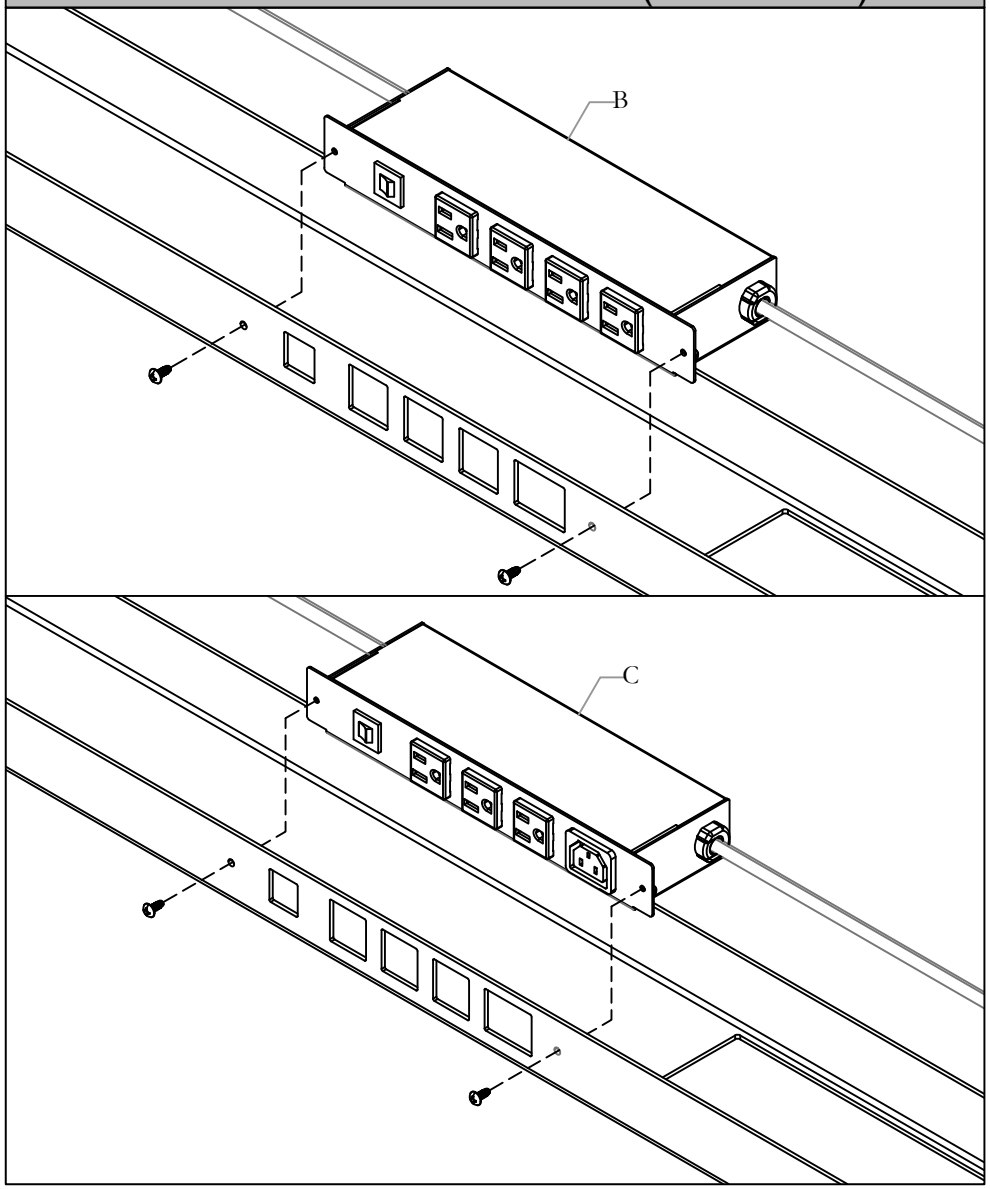

STEP 8a: Attach Power Module as shown above.

ATTACH POWER MODULE COVER (OPTIONAL)

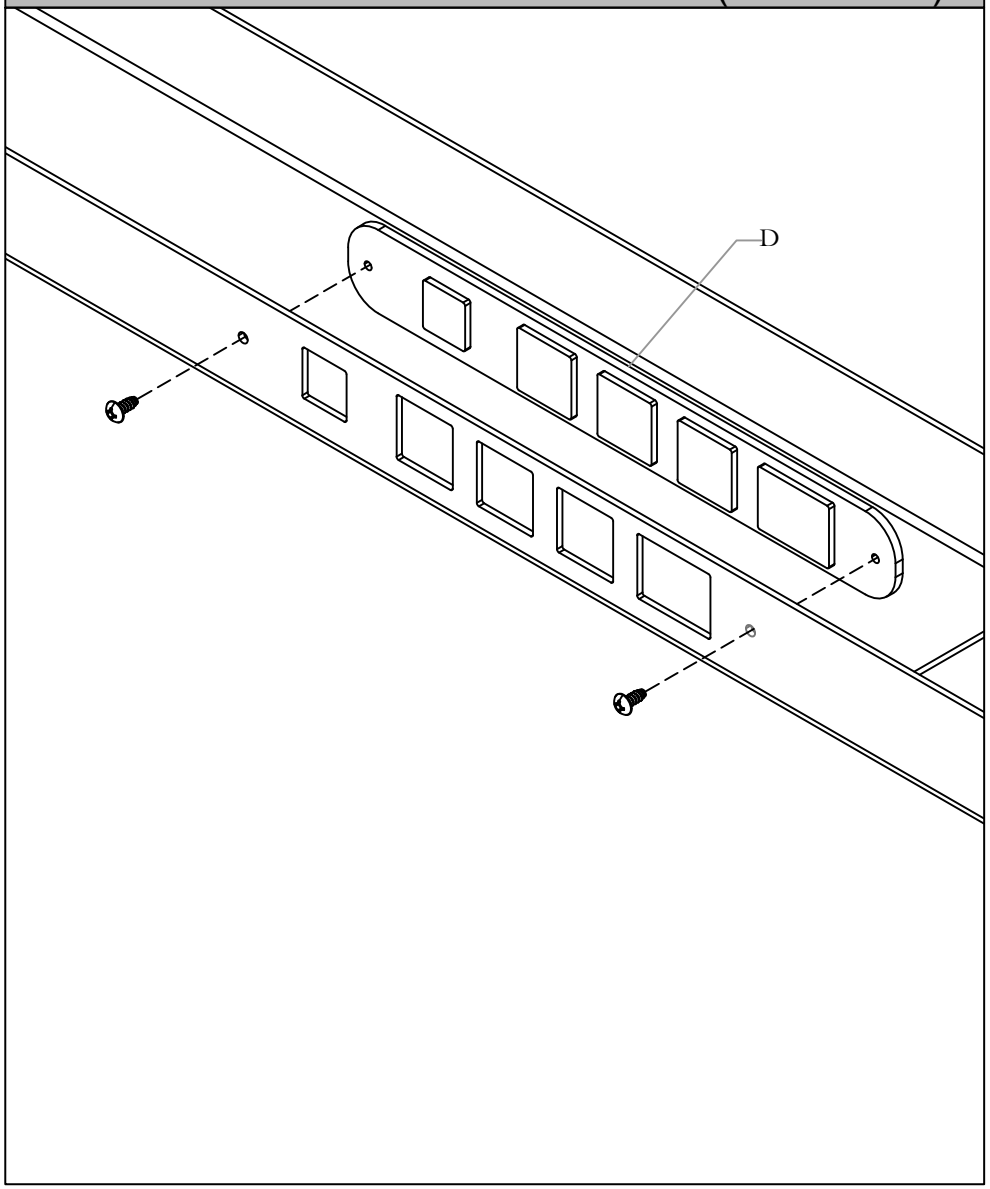

STEP 8b: Attach Power Module Cover as shown above.

WIRE CONNECTIONS

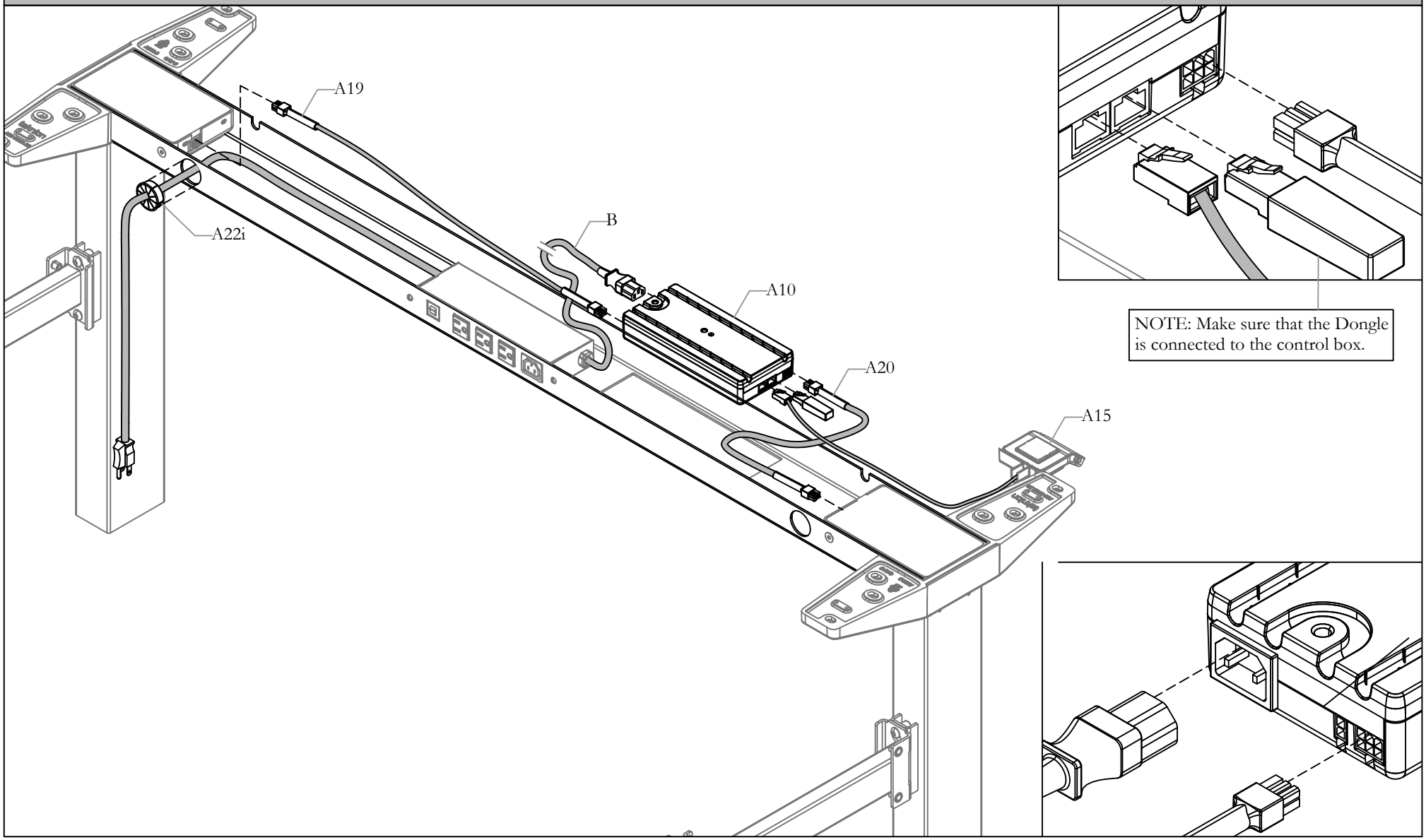

STEP 9: Make the Wire Connections as shown above.

ATTACH WORKSURFACE TO FRAME

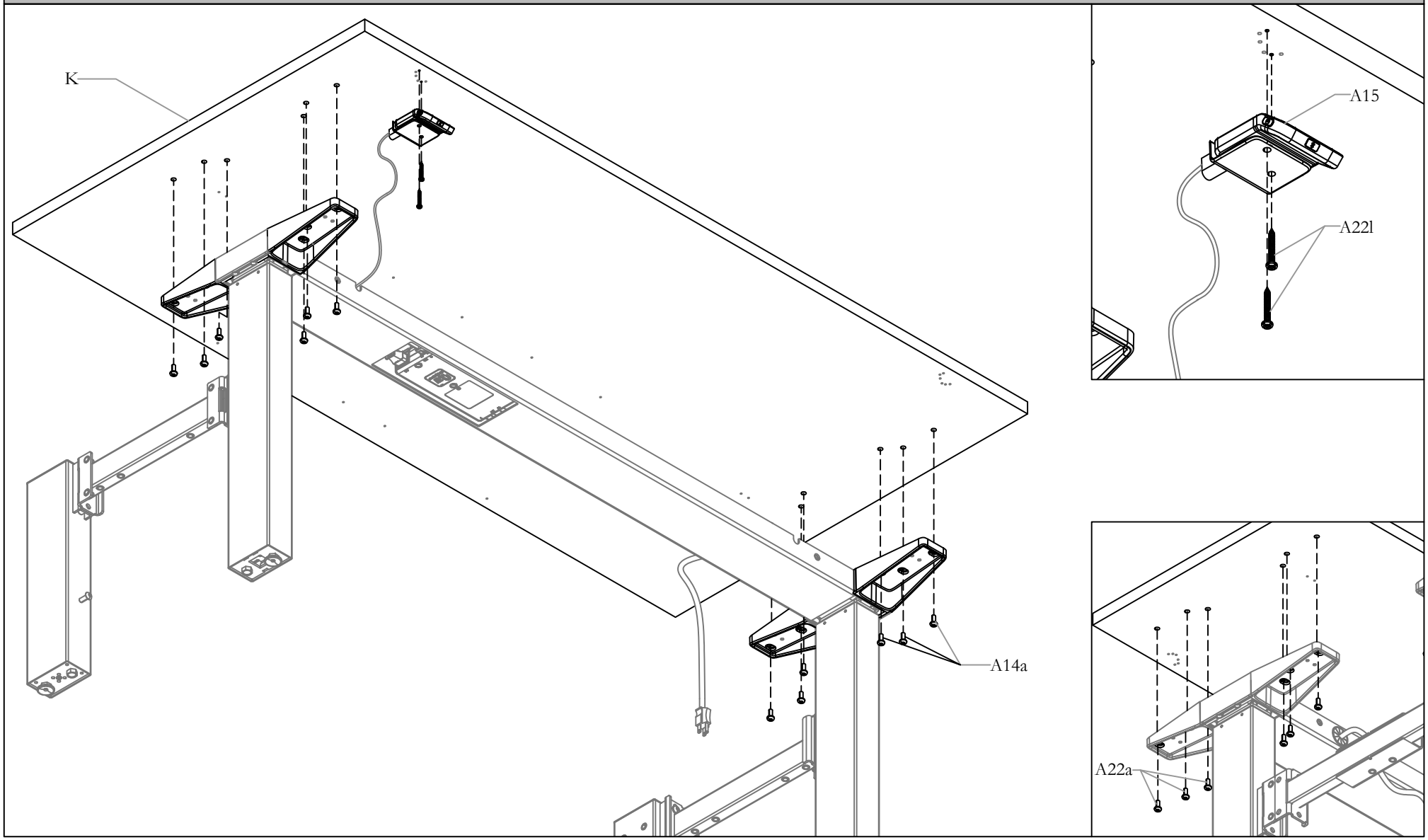

STEP 10: Attach Worksurface to Frame with screws provided.

SECURE CONTROL BOX

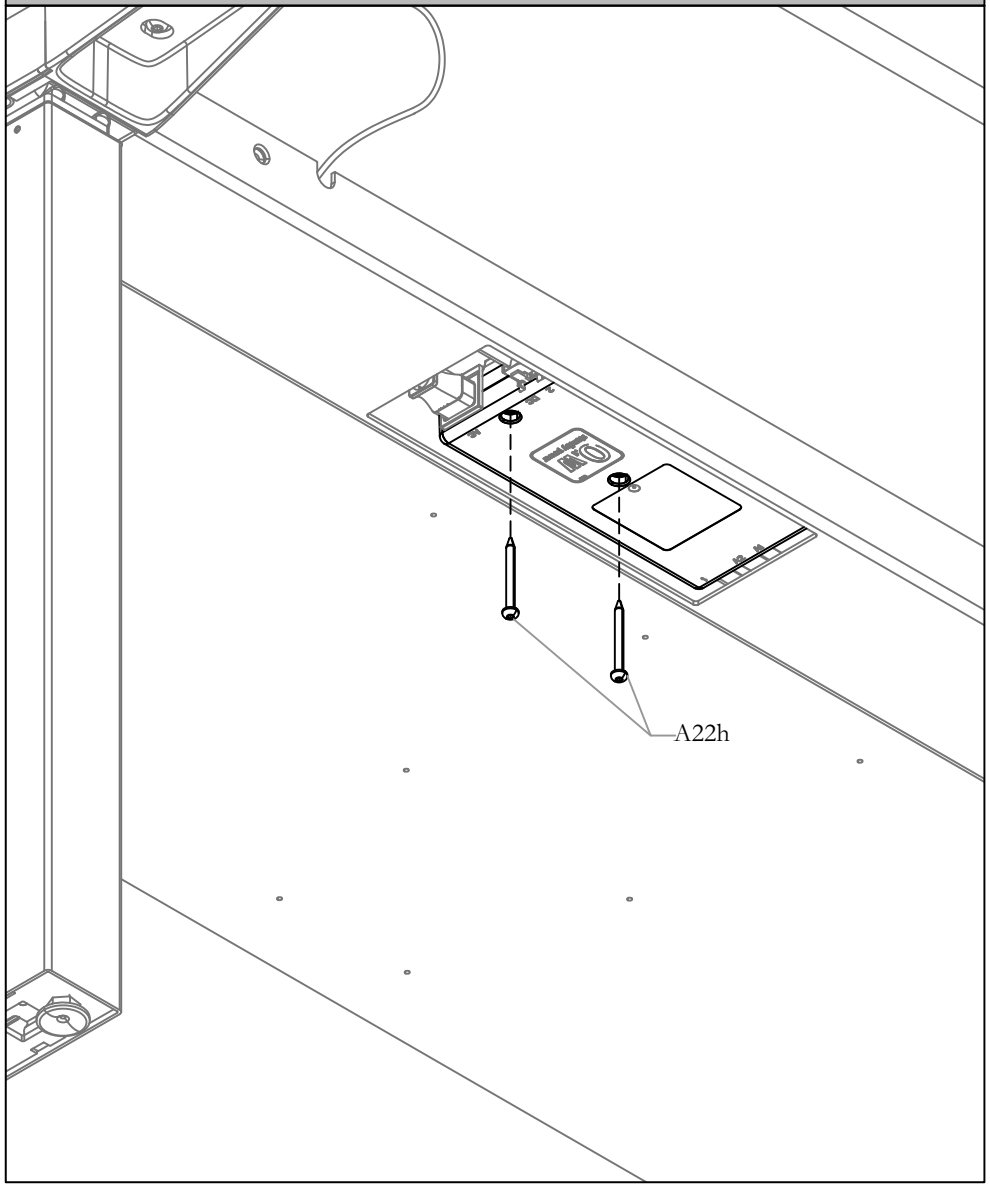

STEP 11a: Secure Control Box to the Worksurface using the Screws provided.

ATTACH CONTROL BOX COVER

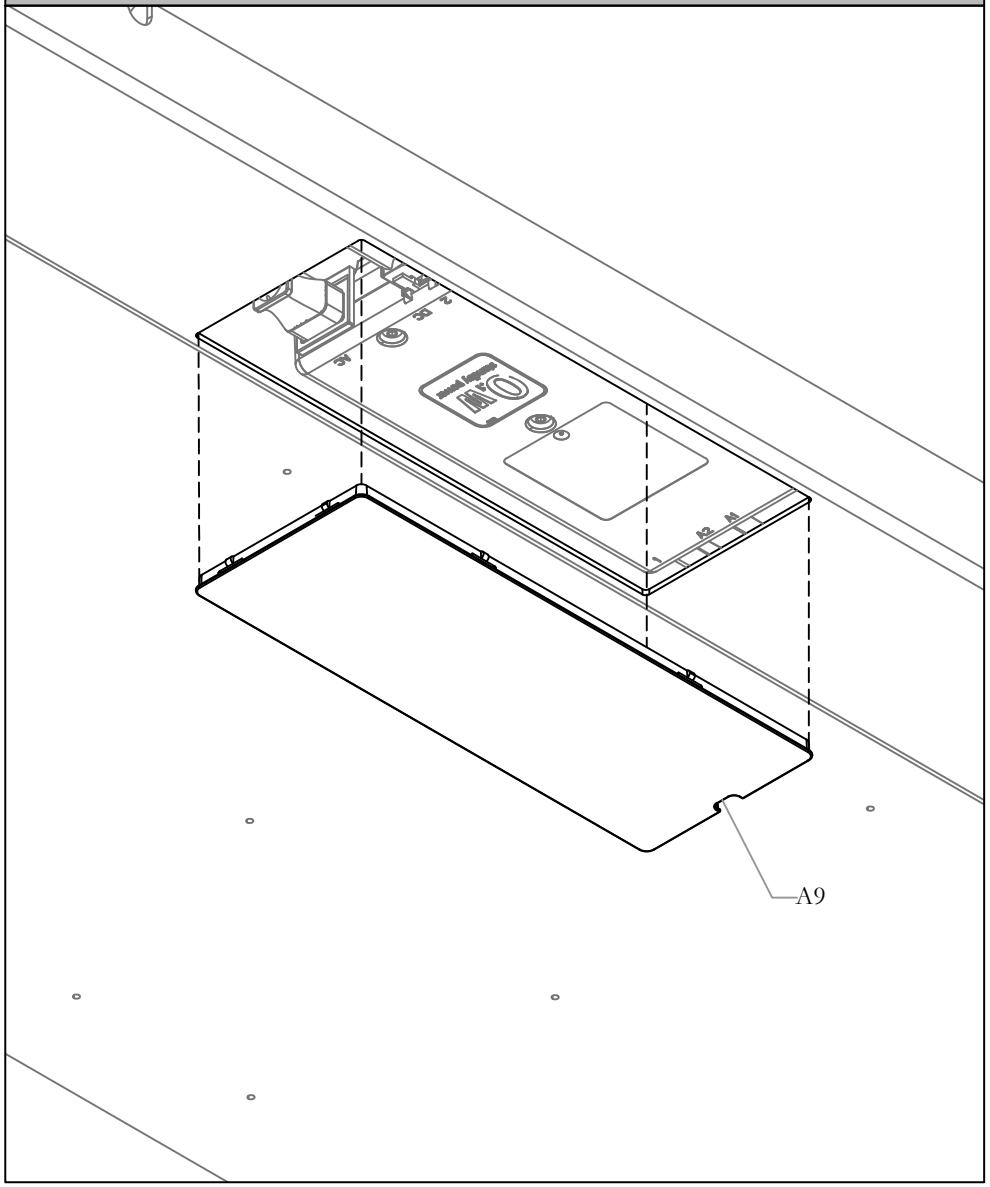

STEP 11b: Attach Control Box Cover to the Cross Beam.

ATTACH CABLE CLAMPS

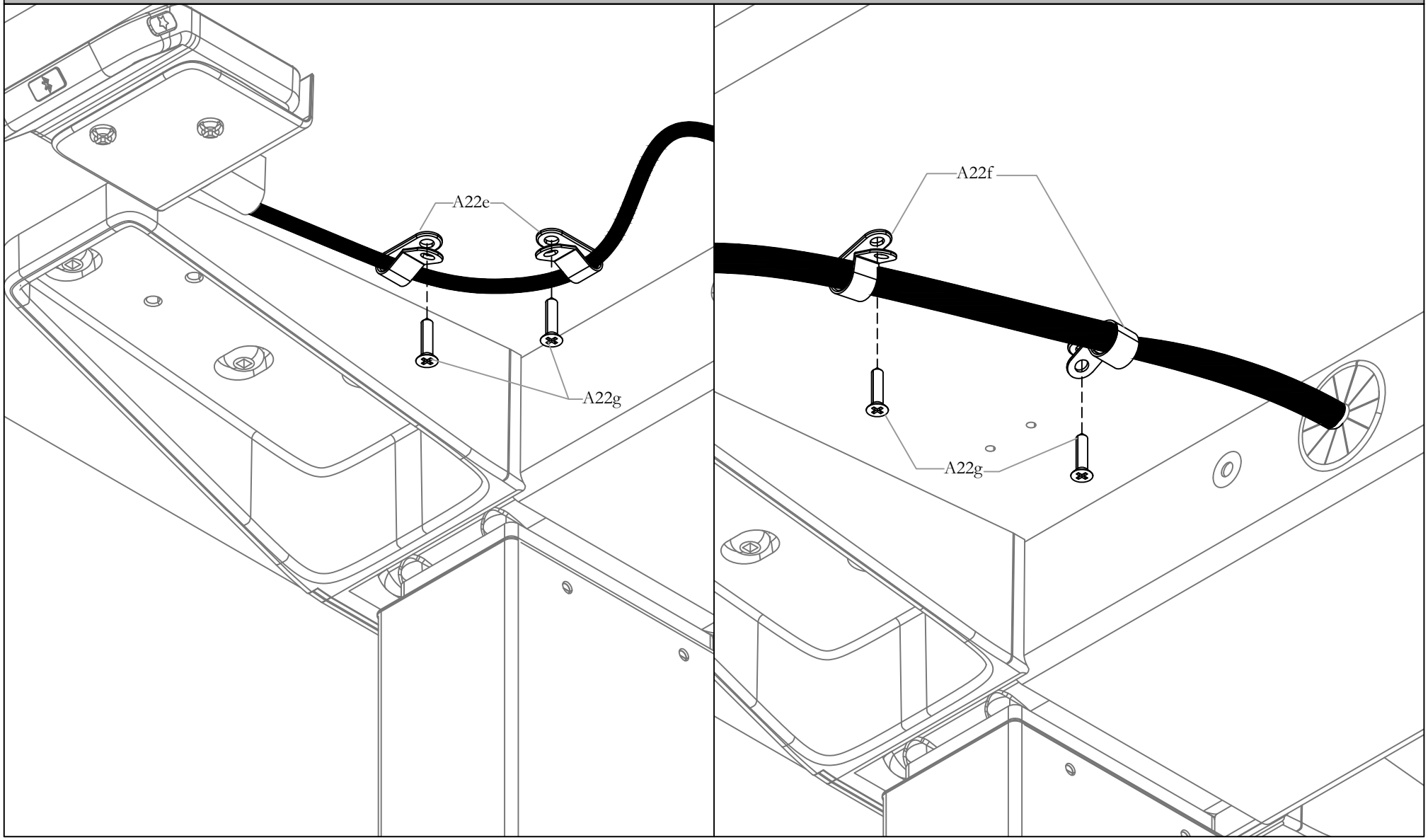

STEP 12: Using wire/Cable Clips and Screws, organize wires as shown above.

PLASTIC TRAY CABLE MANAGEMENT (OPTIONAL)

NOTE: Refer to COM_151b for Dual Plastic Tray Cable Management.

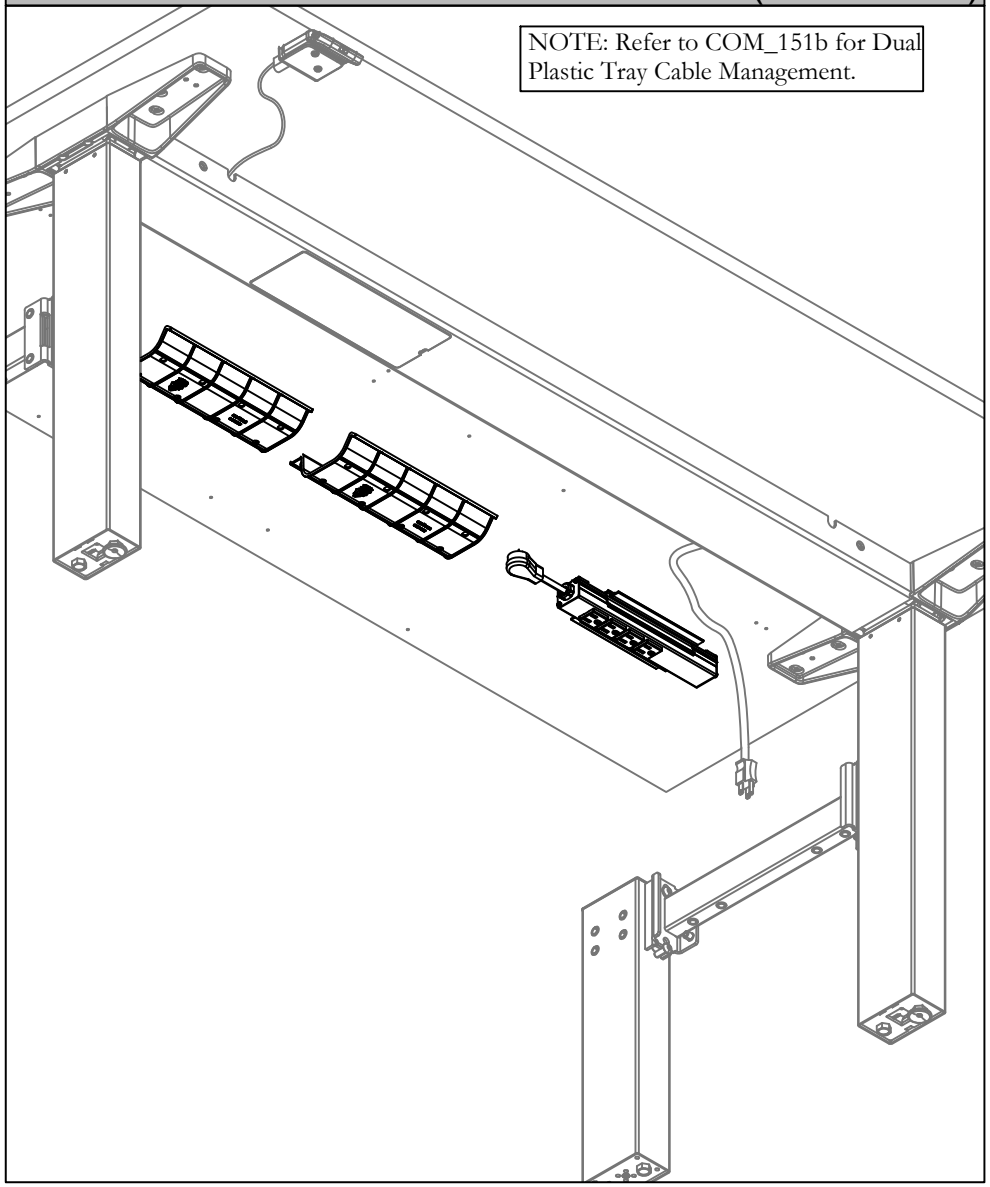

STEP 13a: Refer to COM_151b for Dual Plastic Tray Cable Management.

CABLE ORGANIZER (OPTIONAL)

NOTE: Refer to COM_151a for Cable Organizer.

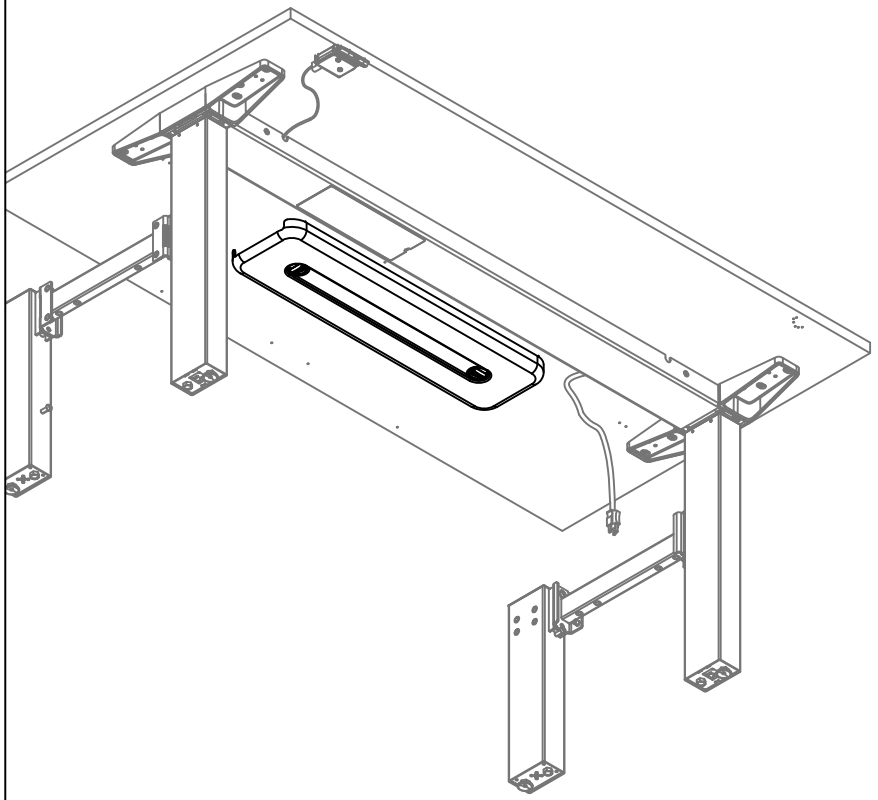

STEP 13b: Refer to COM_151a for Cable Organizer.

DESK EDGE SCREEN - GLASS (HNBCDG)

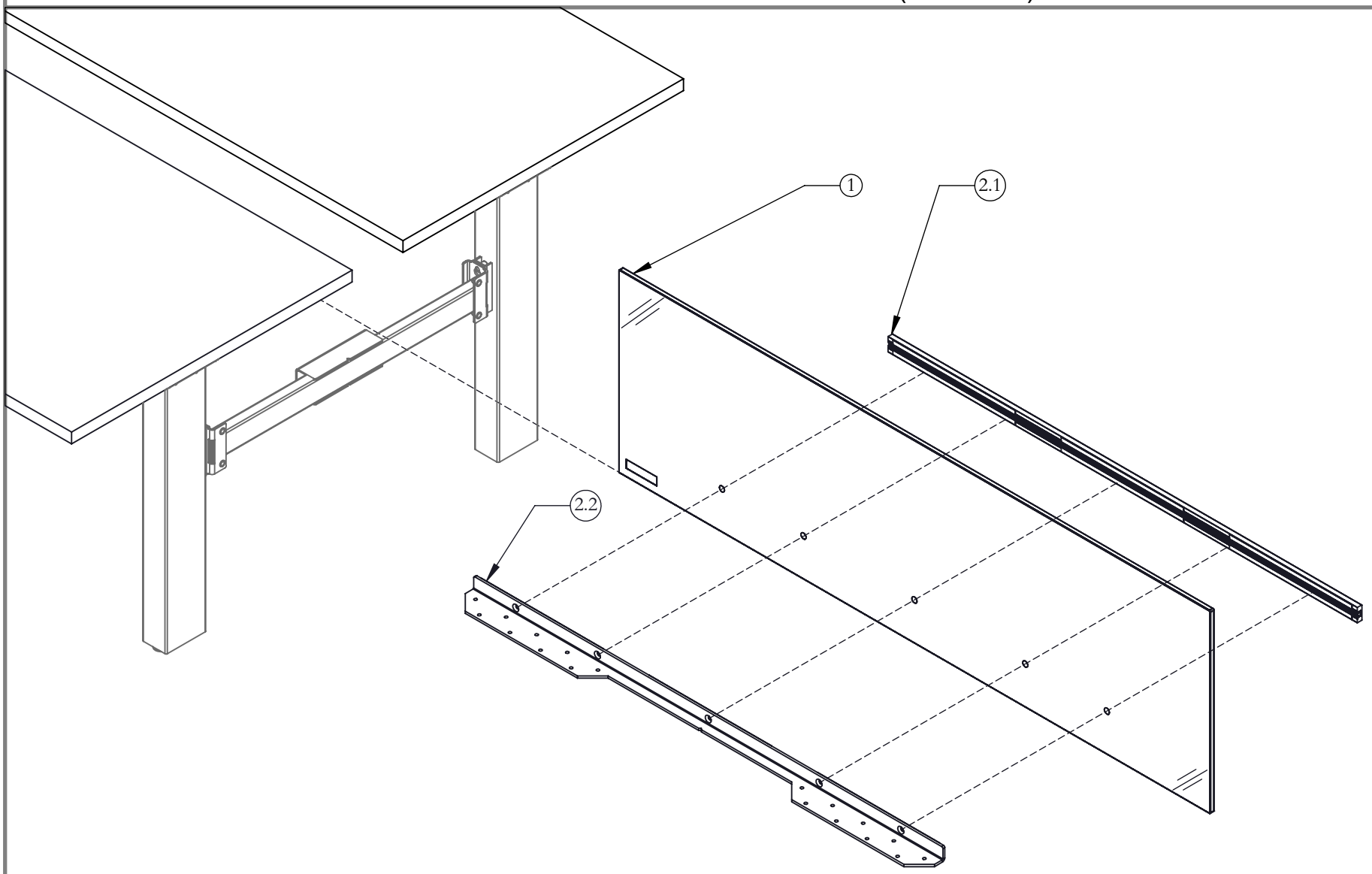

Part & Product Identification

ITEM NO.	ILLUSTRATION	PART NUMBER	DESCRIPTION	QTY.
1	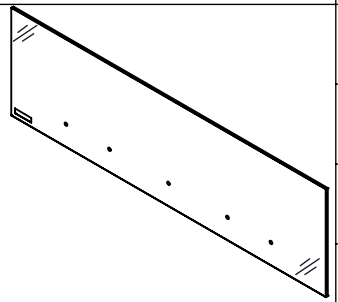	H01-1921-X	10mm CLEAR (CL) TEMPERED GLASS SCREEN, HAB	1
		H02-047-X	10mm FROST (FT) ETCHED TEMPERED GLASS SCREEN, HAB	
		H01-1868-X	6mm CLEAR (CL) TEMPERED GLASS SCREEN, HAB	
		H01-0466-X	6mm FROST (FT) ETCHED TEMPERED GLASS SCREEN, HAB	
2	N/A	X06-0337-X	10mm GLASS DESK EDGE SCREEN MOUNTING KIT, HAB	1
		X06-0336-X	6mm GLASS DESK EDGE SCREEN MOUNTING KIT, HAB	
2.1	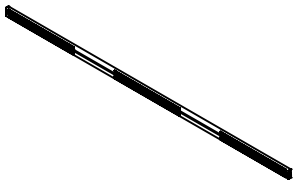	N09-5046-X	DESK EDGE SCREEN BAR-SUBASSEMBLY FOR GLASS, HAB	1
2.2	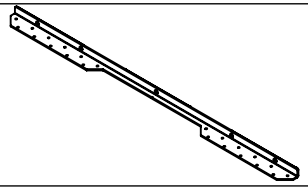	N09-5048-X	DESK EDGE SCREEN MOUNTING BRKT SUB ASSY FOR GLASS, HAB	1
2.3	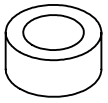	E03-0523	NYLON BUSH.; OD. 1/2" ID. 0.316" TH. 0.234 (# 13RS050071)	46-52": 3 58-64": 4 70-82": 5
2.4		E07-0097	#10 X 1", PAN, QUADREX WOOD SCREW,DEEP THREAD, ZINK	46": 10 52-58": 14 64-70": 18 76-82": 22
2.5	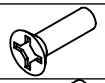	E01-0752	1/4-20 X 7/8" FHMS, SS, QUADREX	46-52": 3 58-64": 4 70-82": 5
		E01-0484	1/4-20 X 3/4" MACH SCRW, FLT	

SCREEN MOUNTING KIT ASSEMBLY

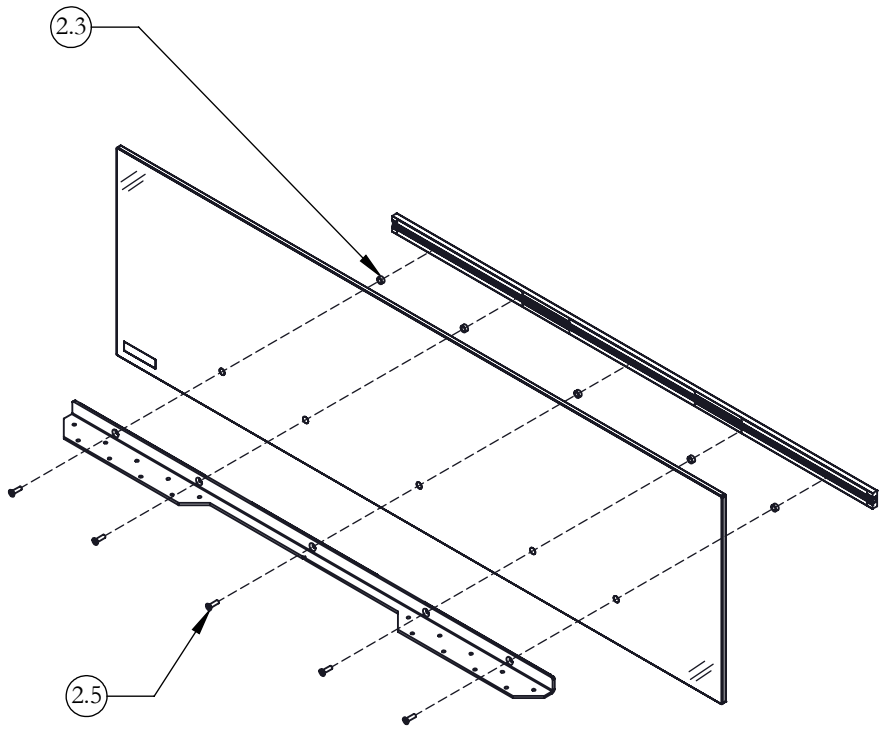

STEP 1: Fasten Screen Bar Subassembly and Mounting Bracket to the Glass Screen

NOTE: If 48" & 54" Desk Edge Screen is specified, Rectangular Grommet CANNOT be installed at the centre.

MARK CENTRELINE

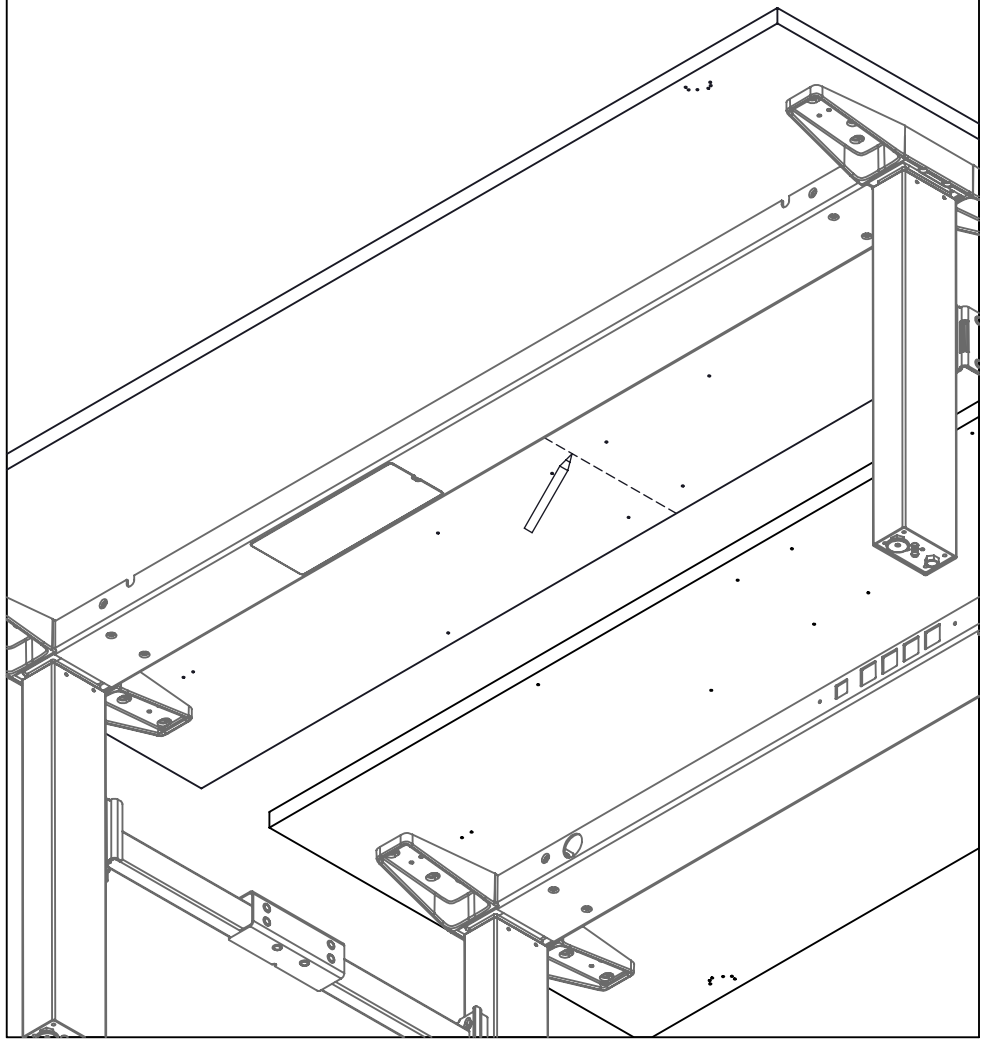

STEP 2: Mark Centreline at the bottom of the Worksurface with pencil as shown.

ATTACH & ALIGN SCREEN

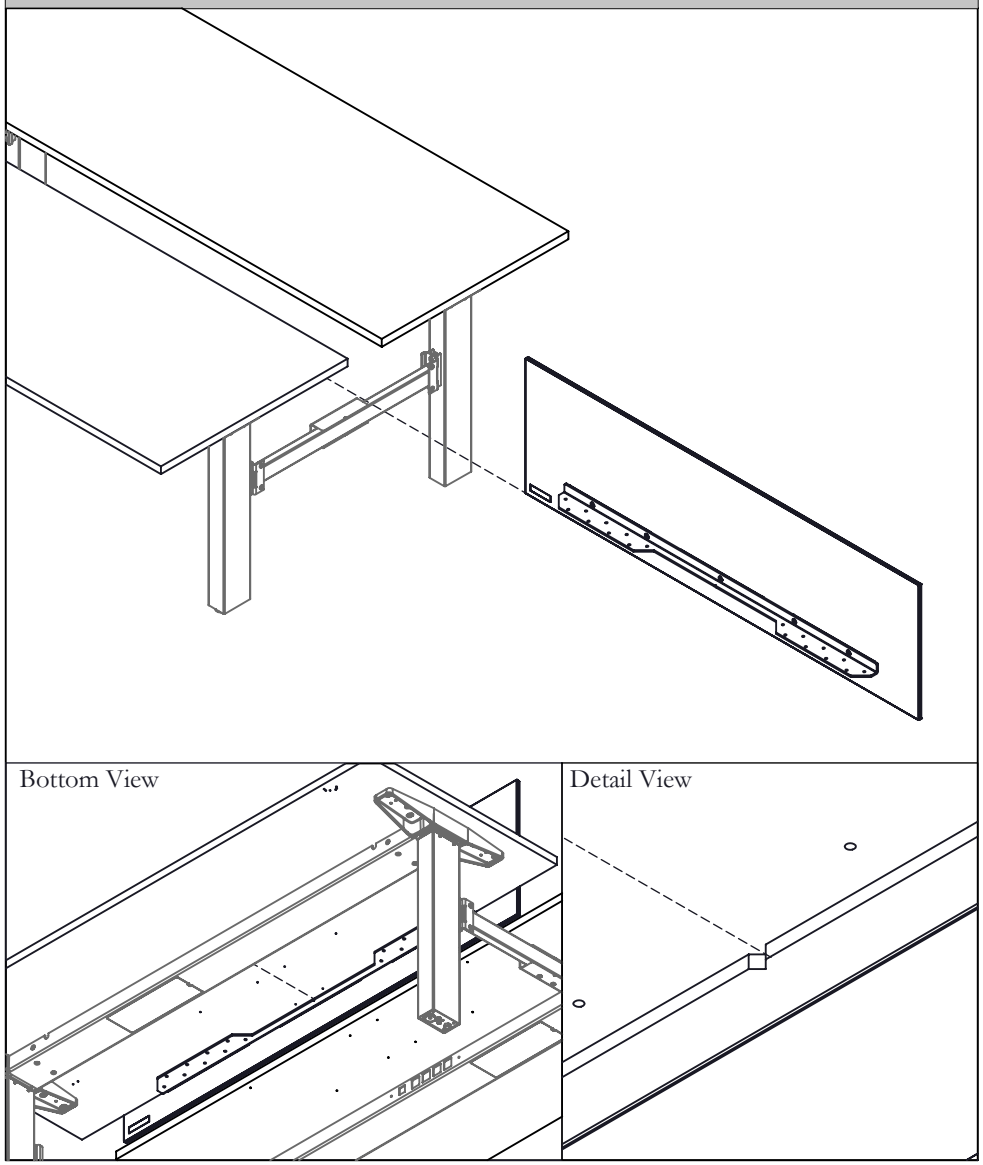

STEP 3: Attatch Mounting Bracket to the back of the Worksurface. Make sure the cut out of he Bracket aligns with the marked Centreline.

SECURE SCREEN

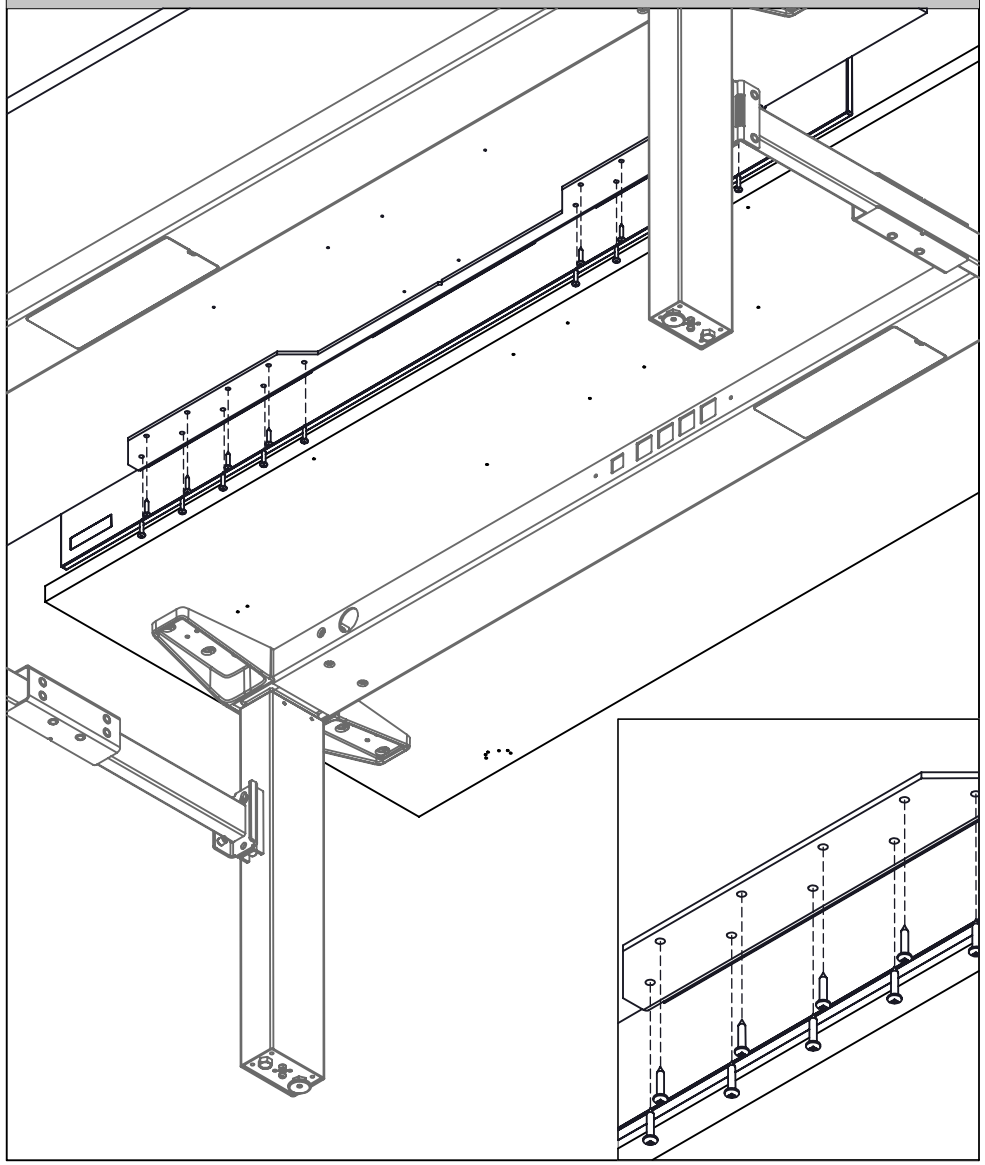

STEP 4: Fasten mounting Bracket to the underside of the Worksurface as shown.

DESK EDGE SCREEN - SOLID (HNBCDS)

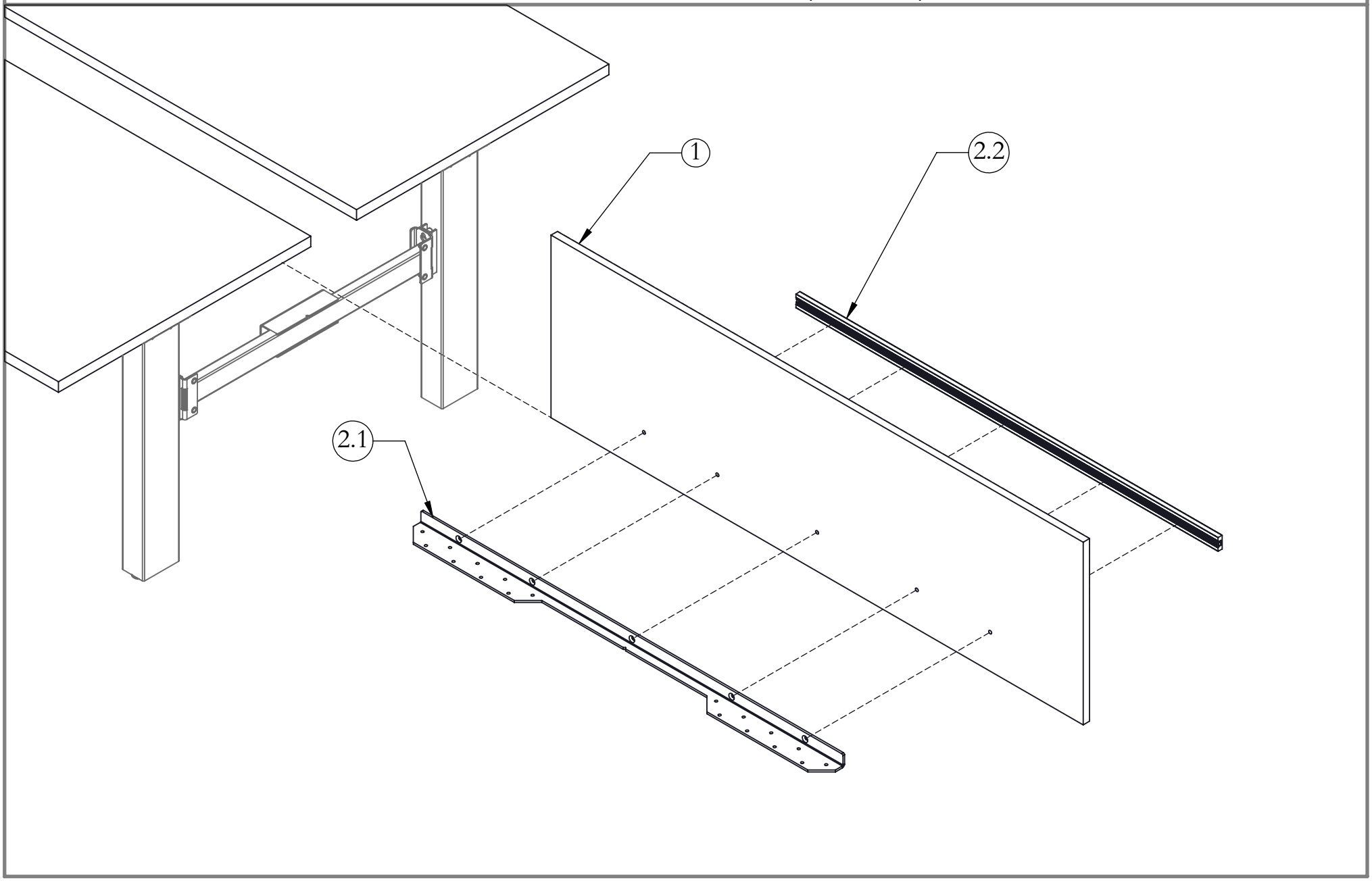

Part & Product Identification

ITEM NO.	ILLUSTRATION	PART NUMBER	DESCRIPTION	QTY.
1	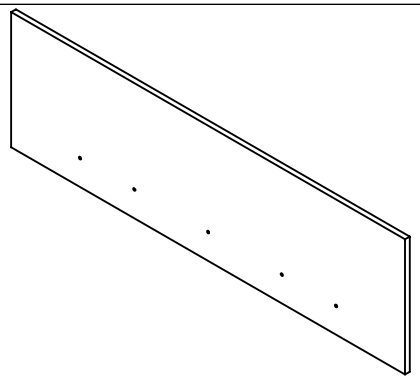	C05-8870-X	DESK EDGE WOOD SCREEN, HAB	1
2	N/A	X06-0339-X	SOLID DESK EDGE SCREEN MOUNTING KIT, HAB	1
2.1	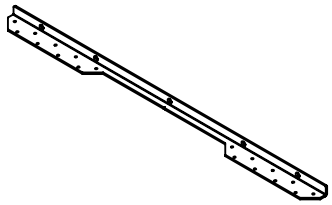	A16-2959-X	DESK EDGE SCREEN MOUNTING BRKT, HAB	1
2.2	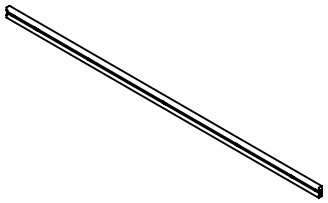	N09-5045-X	DESK EDGE SCREEN BAR-SUBASSEMBLY FOR WOOD, HAB	1
2.3	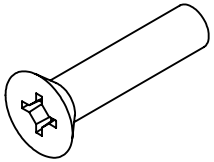	E01-0906	MACHINE SCREW, 1/4-20 X 1-1/8"L, FLAT, QUADREX, ZINC	46": 10 52-58": 14 64-70": 18 76-82": 22 88": 26 94": 30
2.4	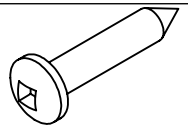	E07-0097	#10 X 1", PAN, QUADREX WOOD SCREW,DEEP THREAD, ZINK	46-52": 3 58-64": 4 70-94": 5

SCREEN MOUNTING KIT ASSEMBLY

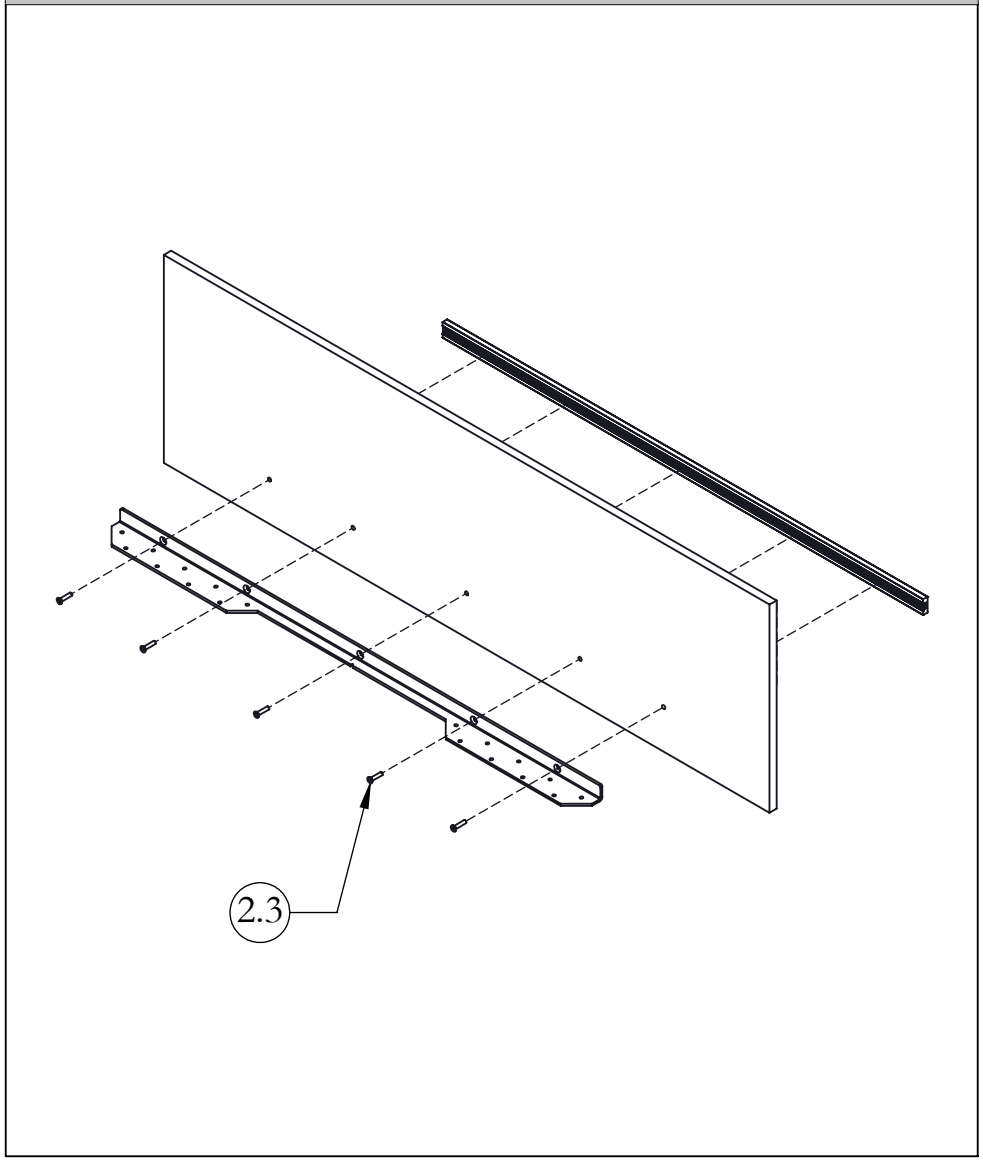

STEP 1: Fasten Screen Bar Subassembly and Mounting Bracket to the Screen

NOTE: If 48" & 54" Desk Edge Screen is specified, Rectangular Grommet CANNOT be installed at the centre.

MARK CENTRELINE

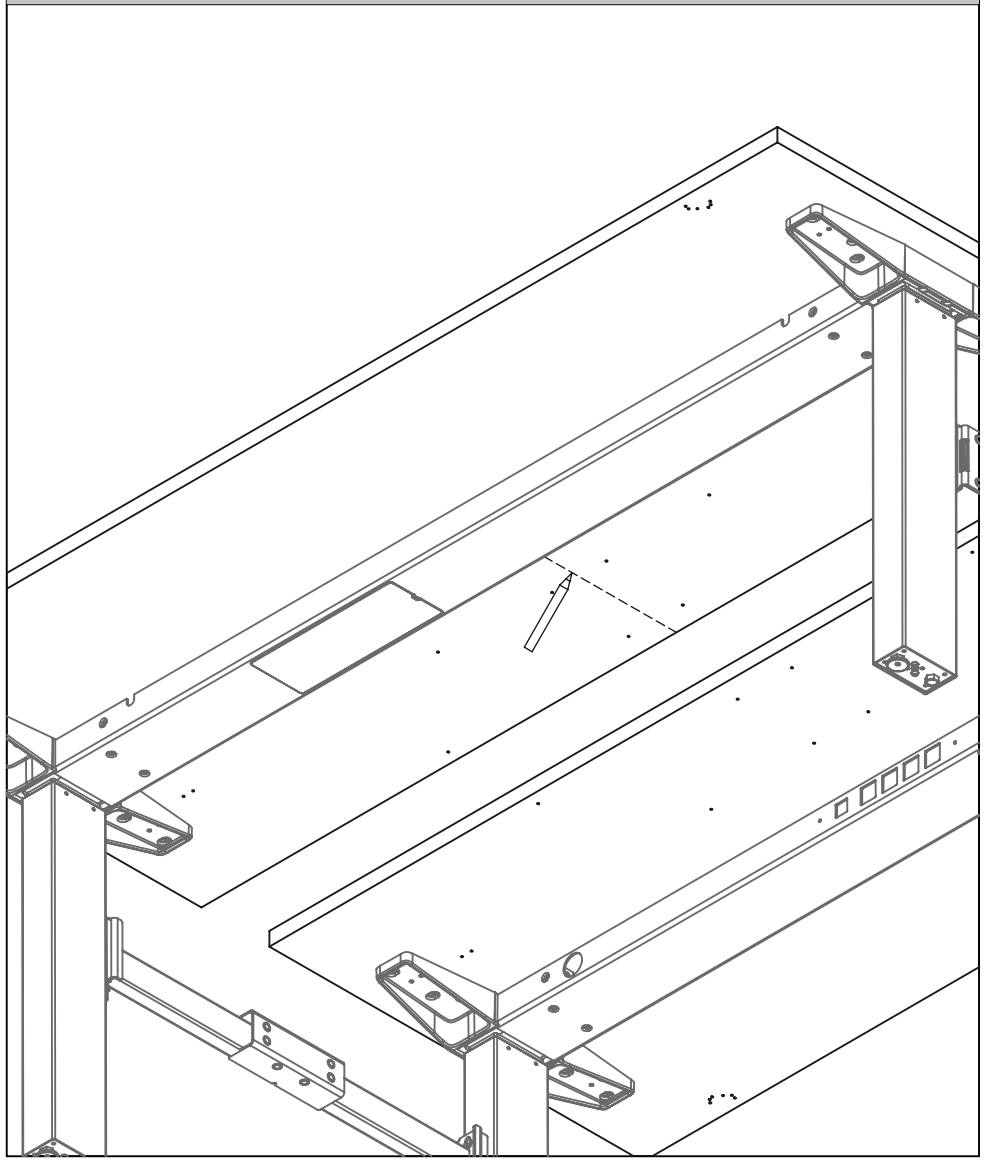

STEP 2: Mark Centreline at the bottom of the Worksurface with pencil as shown.

ATTACH & ALIGN SCREEN

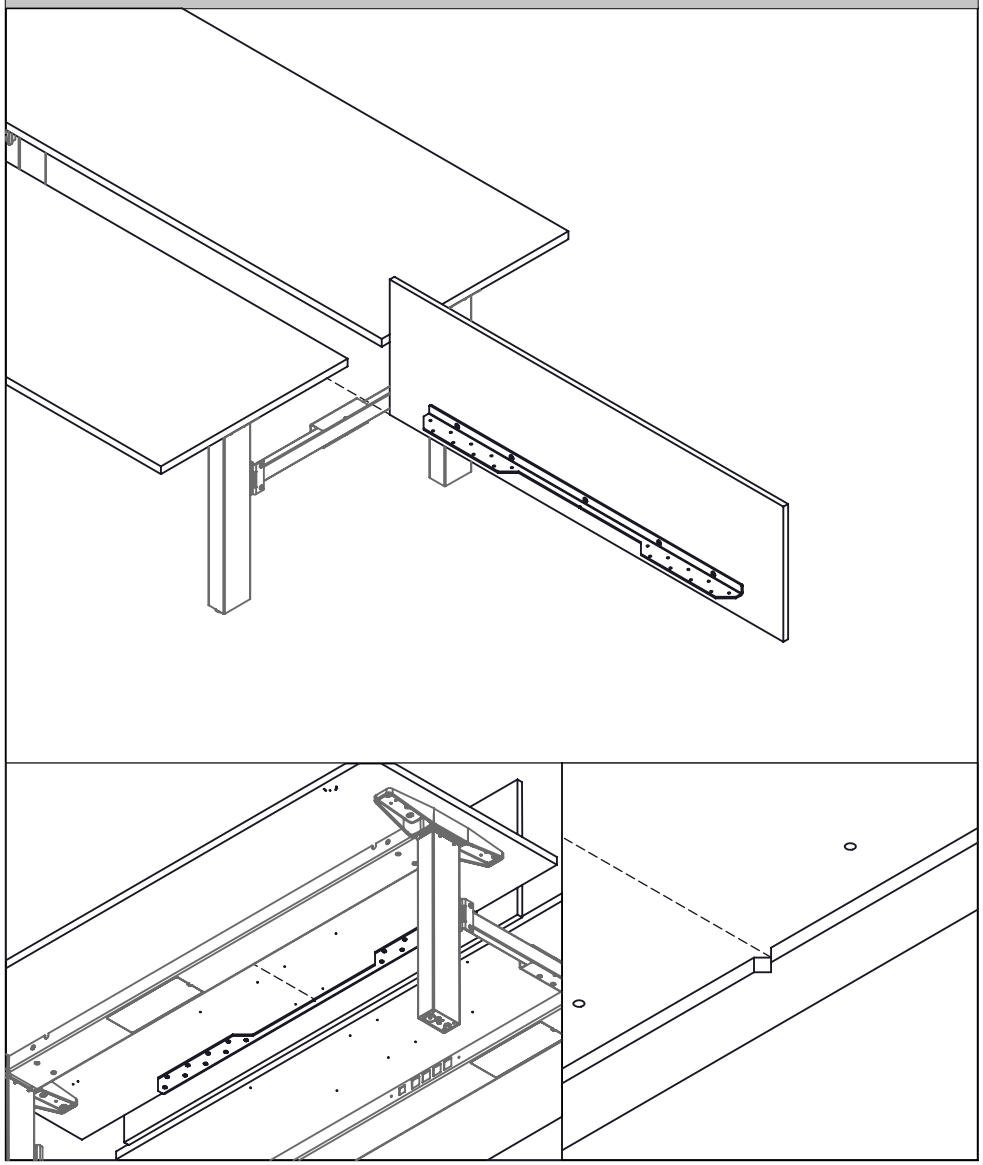

STEP 3: Attatch Mounting Bracket to the back of the Worksurface. Make sure the cut out of he Bracket aligns with the marked Centreline.

SECURE SCREEN

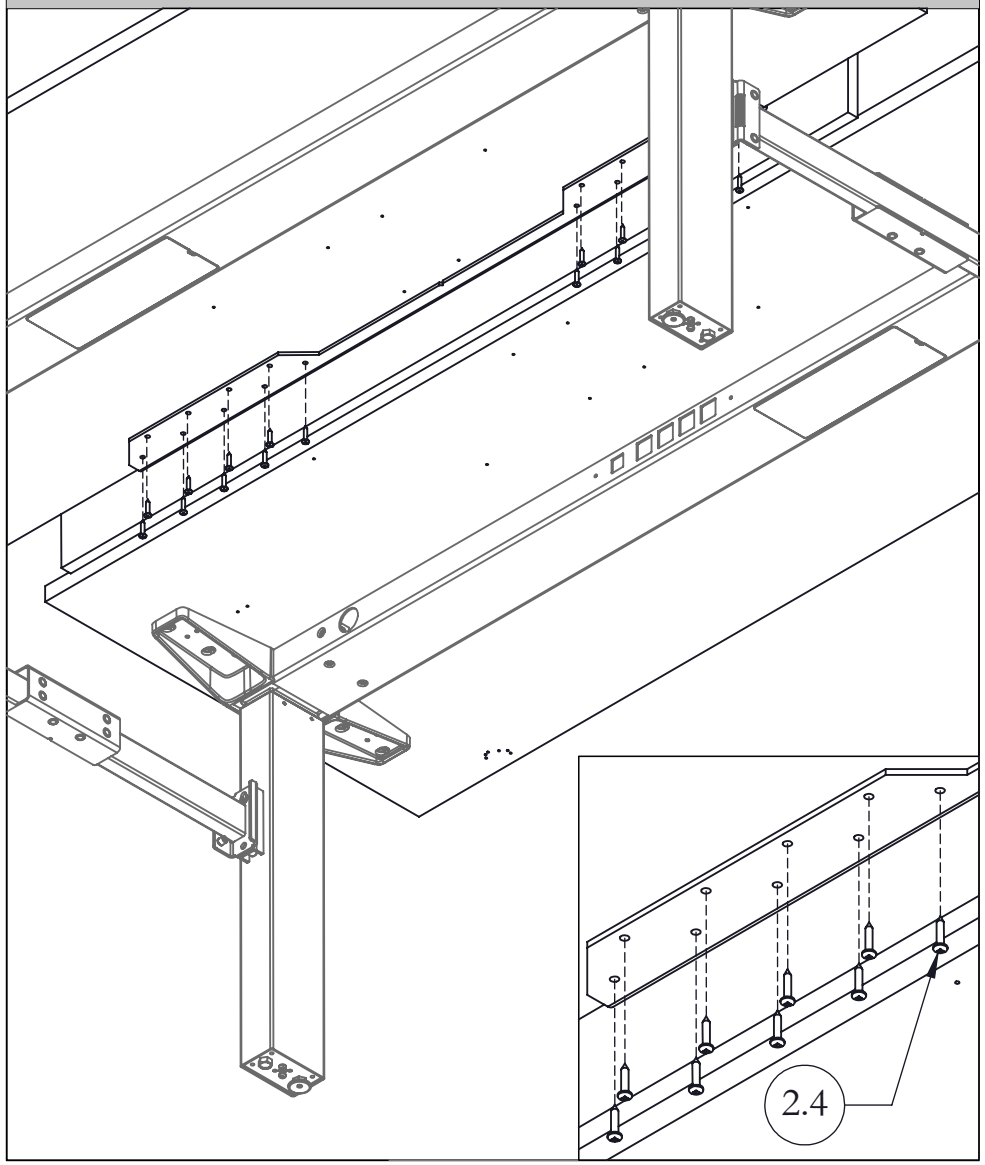

STEP 4: Fasten mounting Bracket to the underside of the Worksurface as shown.

DESK EDGE SCREEN - FABRIC (HNBCDF)

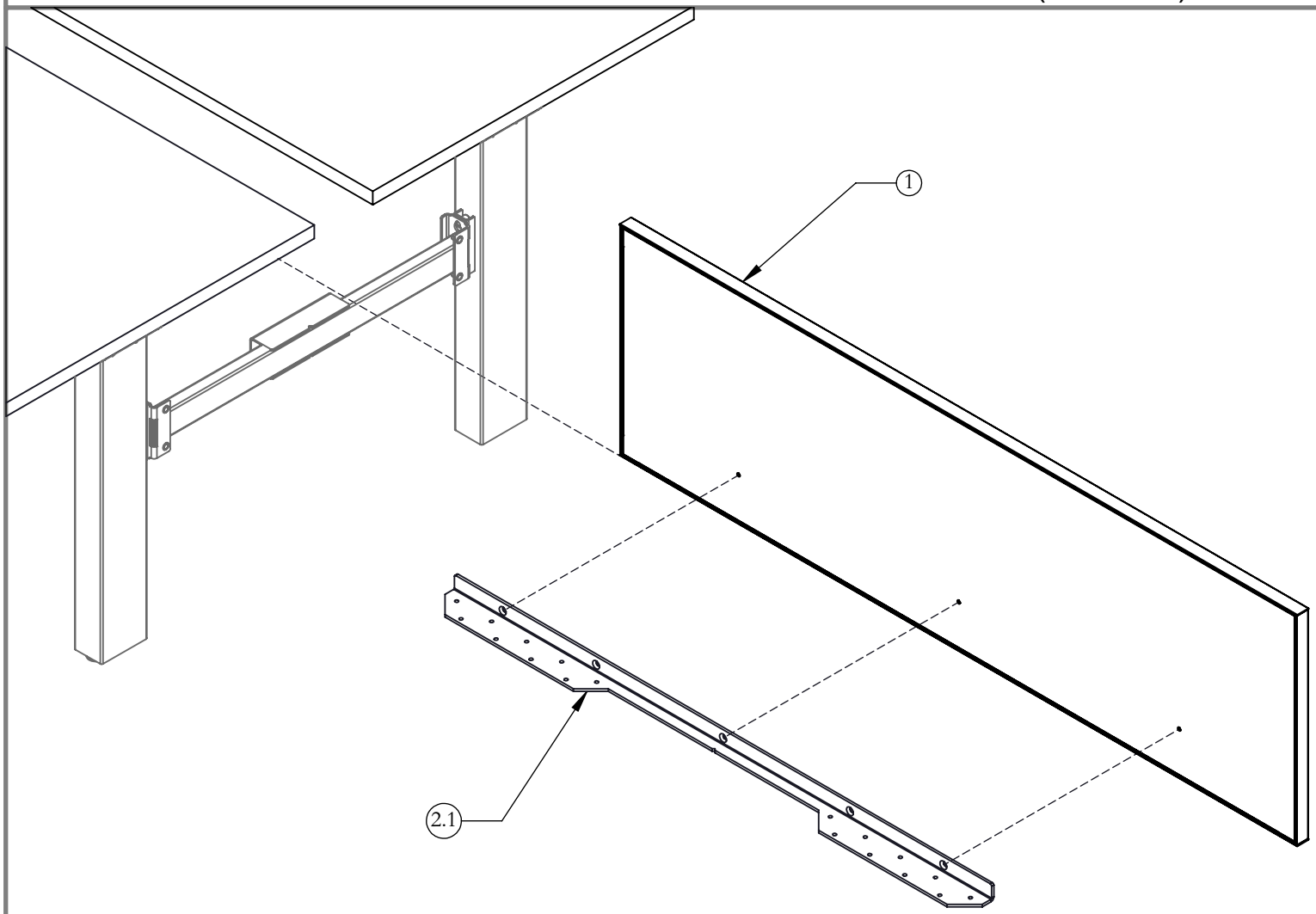

Part & Product Identification

ITEM NO.	ILLUSTRATION	PART NUMBER	DESCRIPTION	QTY.
1	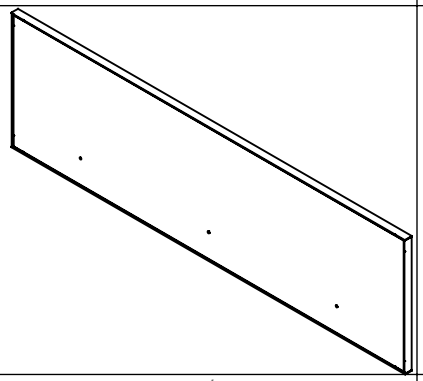	N03-2735-X	FABRIC DESK EDGE SCREEN SUB-ASSY - HAB	1
2	N/A	X06-0338-X	FABRIC DESK EDGE SCREEN MOUNTING KIT, HAB	1
2.1	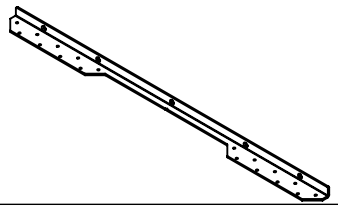	A16-2959-X	DESK EDGE SCREEN MOUNTING BRKT, HAB	1
2.2	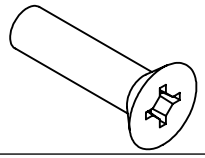	E01-0008	1/4-20 X 1" MACHINE SCREW; QUADREX; FLAT HEAD; ZINC	46": 2 52-82": 3
2.3		E03-0640	SLOTTED WASHER, 1"OD x 3/8 ID x 1/16 THK, ZINC	46": 2 52-82": 3
2.4	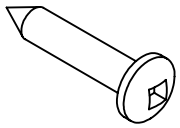	E07-0097	#10 X 1", PAN, QUADREX WOOD SCREW,DEEP THREAD, ZINK	10
2.5	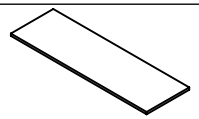	B05-0098	DESK EDGE FABRIC PERSONAL SCREEN LEVELING SHIM	46-58": 2 64-82": 4

SCREEN MOUNTING KIT ASSEMBLY

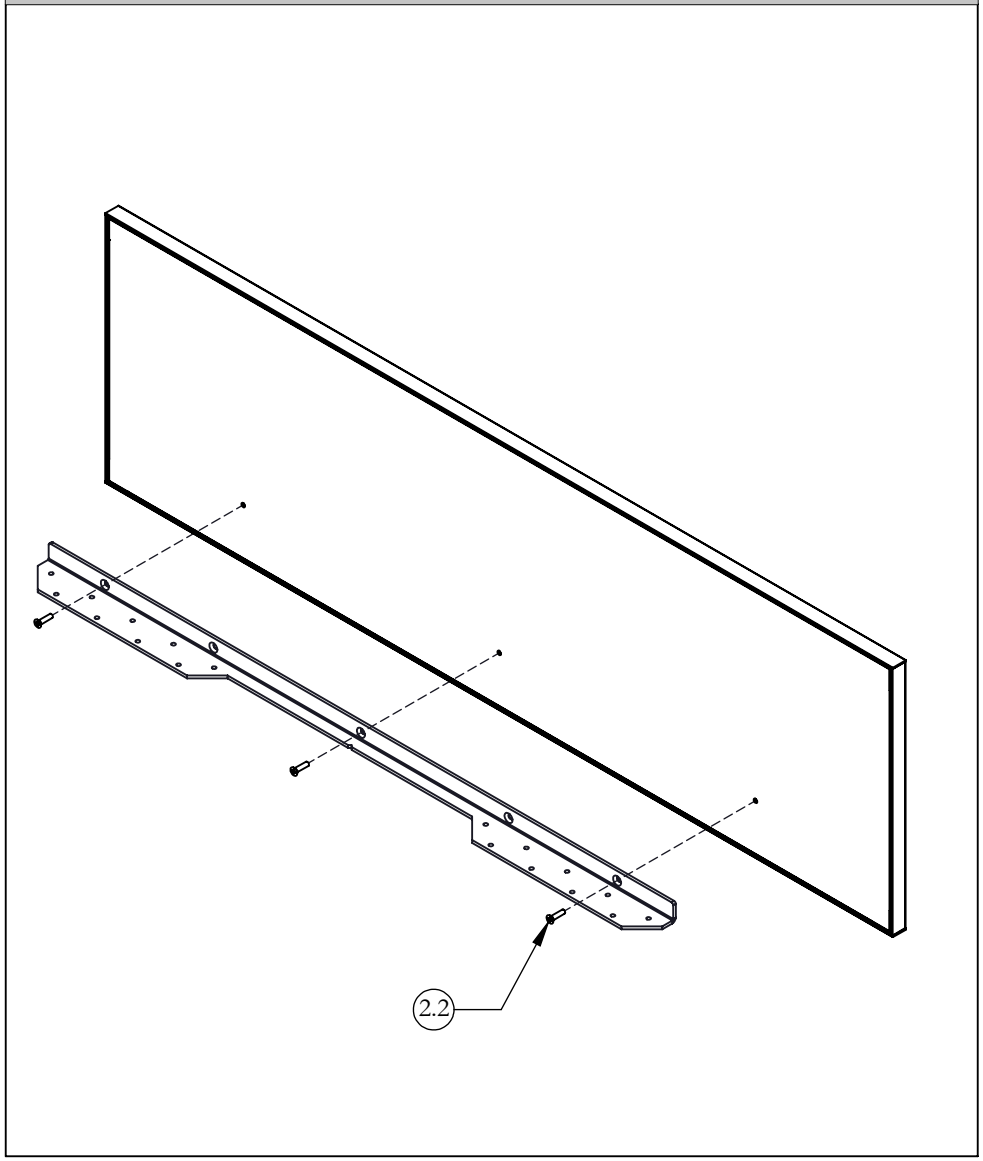

STEP 1: Fasten Screen Bar Subassembly and Mounting Bracket to the Screen looseley.

NOTE: If 48" & 54" Desk Edge Screen is specified, Rectangular Grommet CANNOT be installed at the centre.

INSERT WASHER & TIGHTEN BRACKET

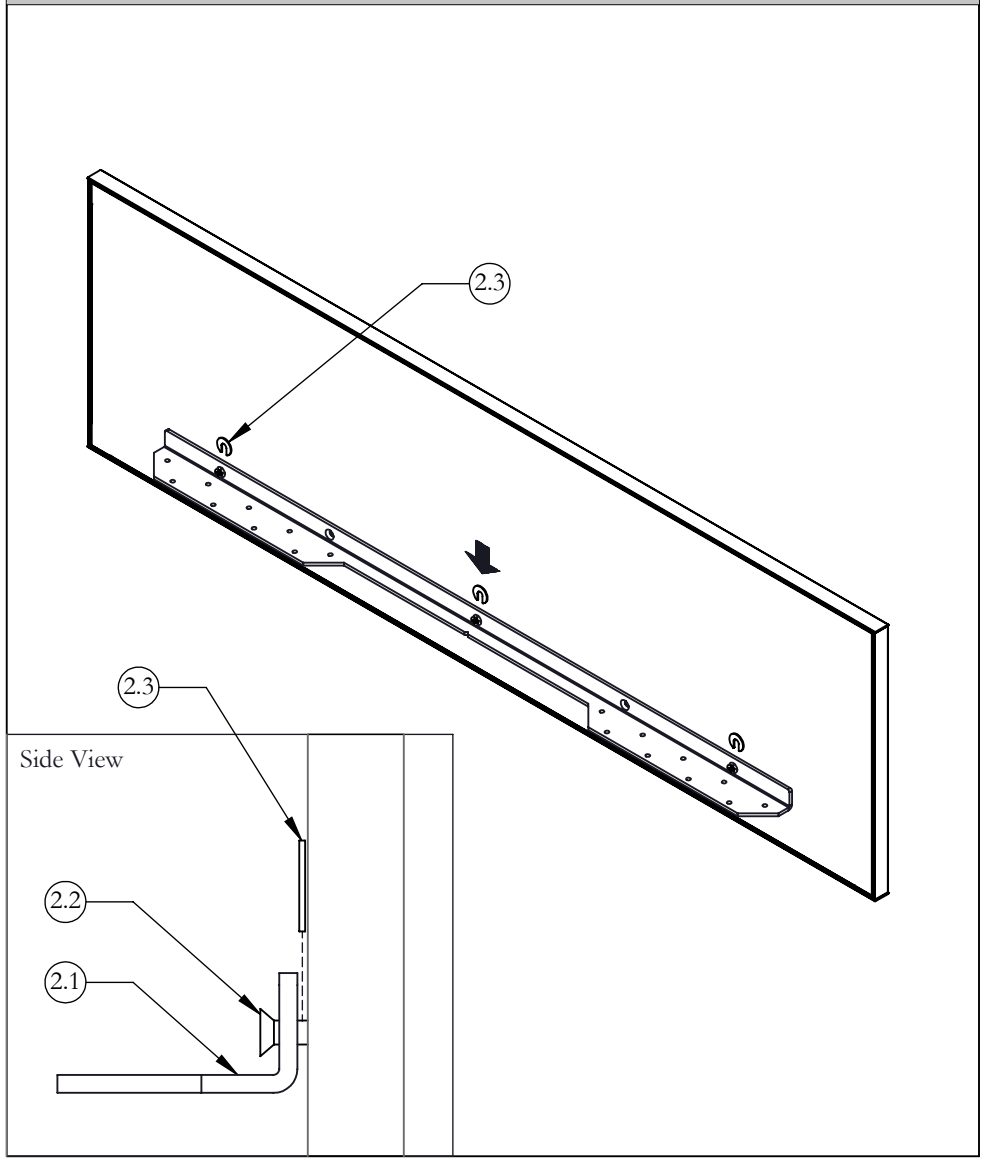

STEP 2: Insert Slotted Washers to Screws between Bracket and Fabric Frame, then Tighten the Screws fully.

MARK CENTRELINE

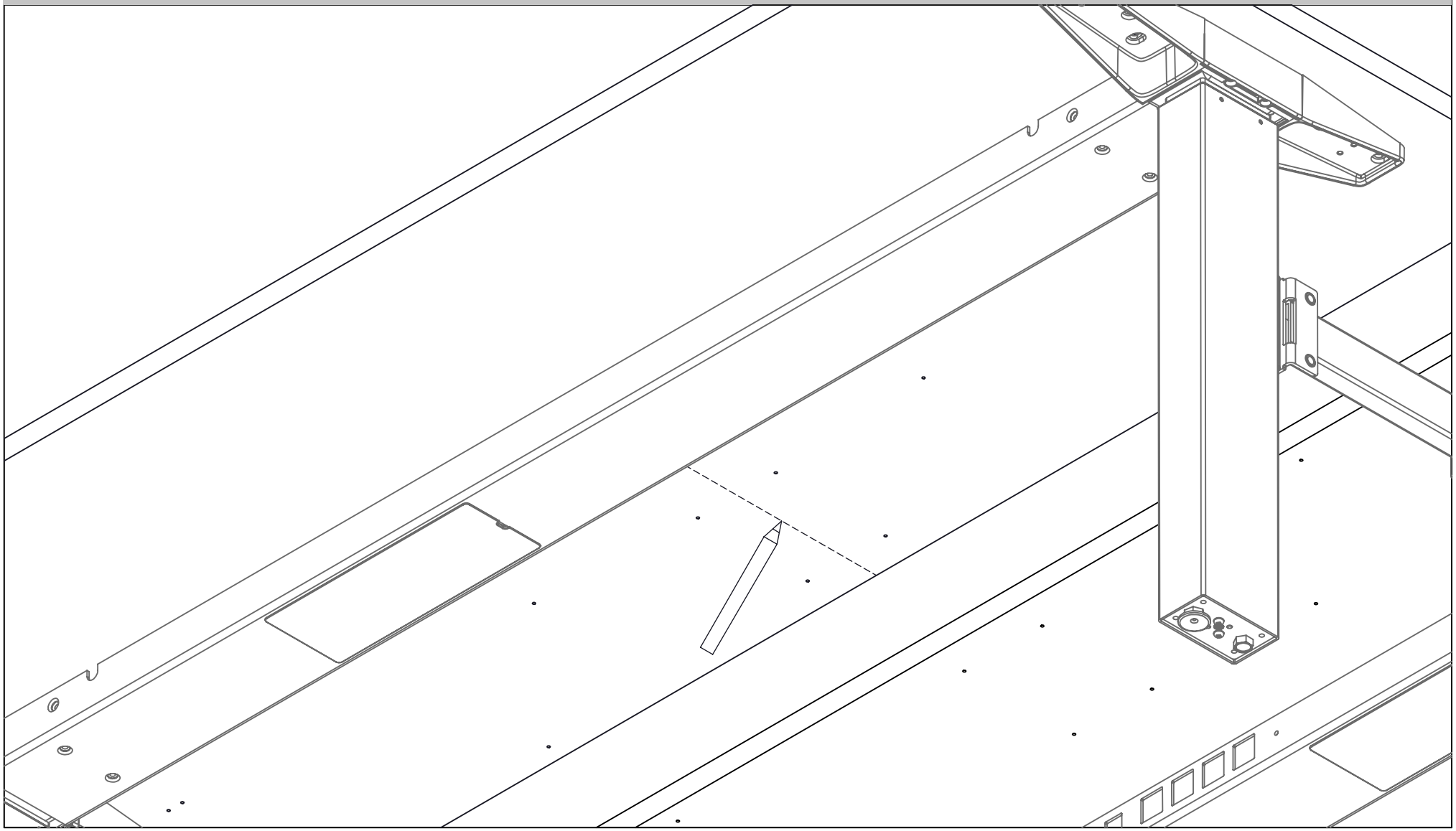

STEP 3: Mark Centreline at the bottom of the Worksurface with a pencil as shown.

ATTACH & ALIGN SCREEN

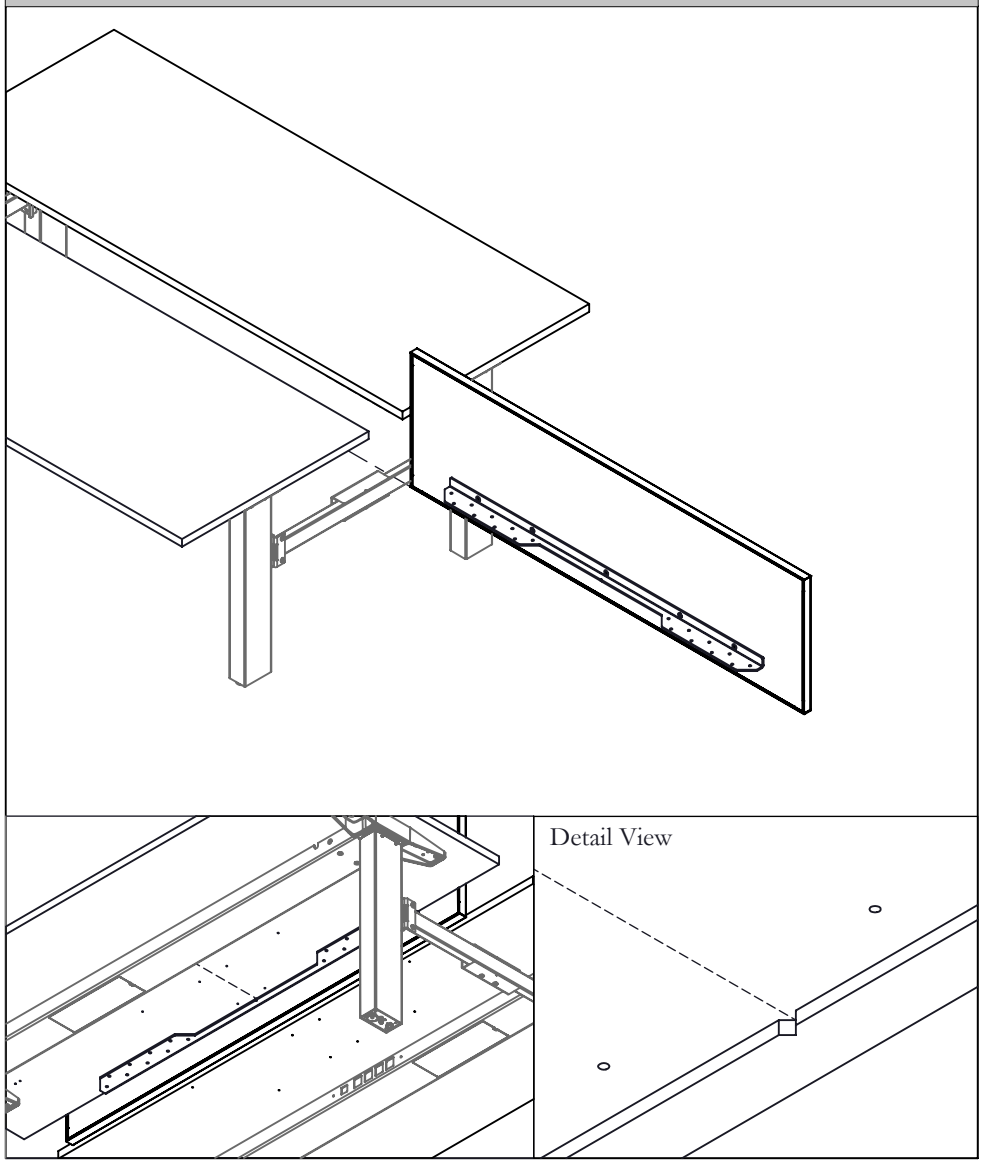

STEP 4: Attatch Mounting Bracket to the back of the Worksurface. Make sure the cut-out of the Bracket aligns with the marked Centreline.

SECURE SCREEN

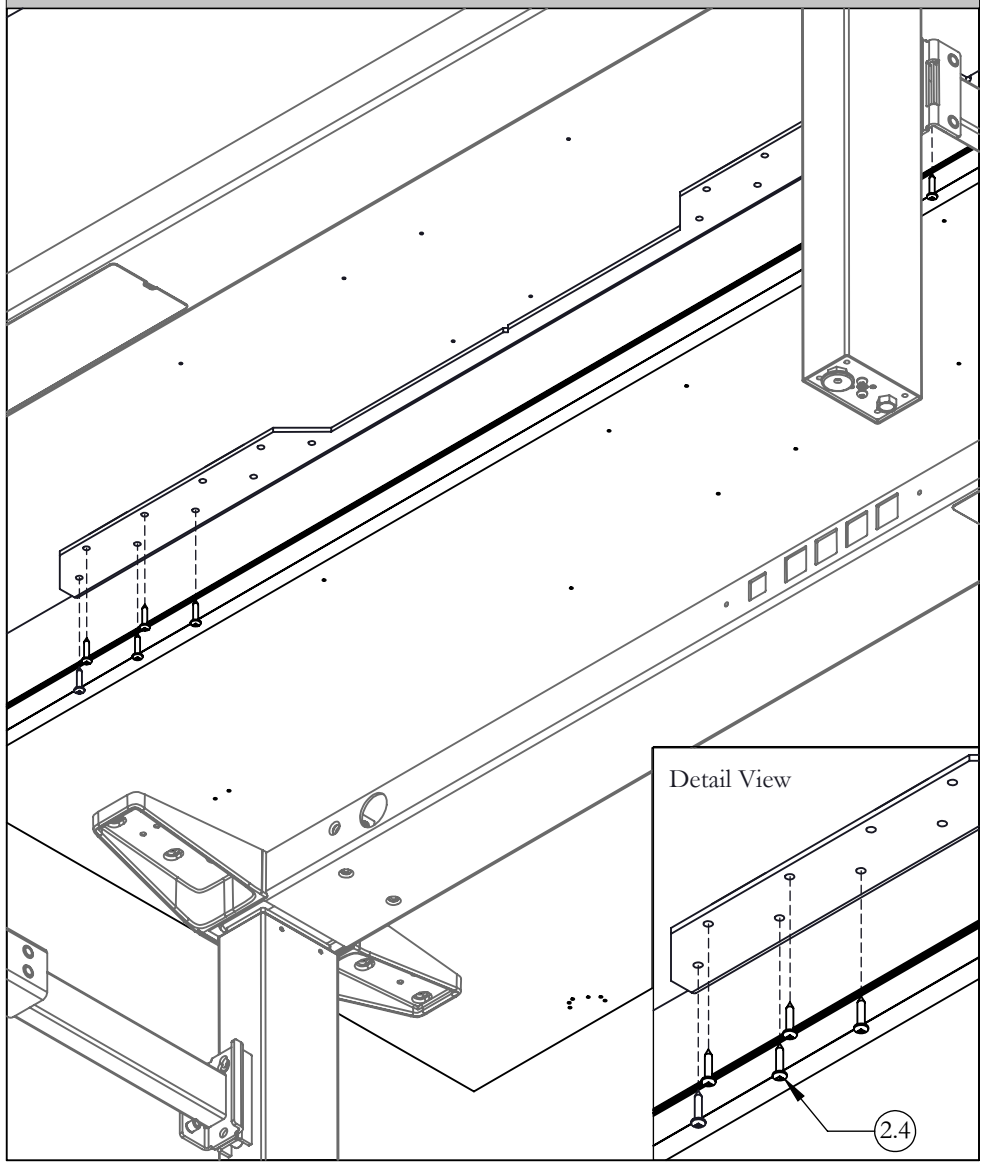

STEP 5: Fasten mounting Bracket to the underside of the Worksurface as shown.

NOTE: Fasten Screws to outer pilot holes.

ATTACH SHIMS

OPTIONAL

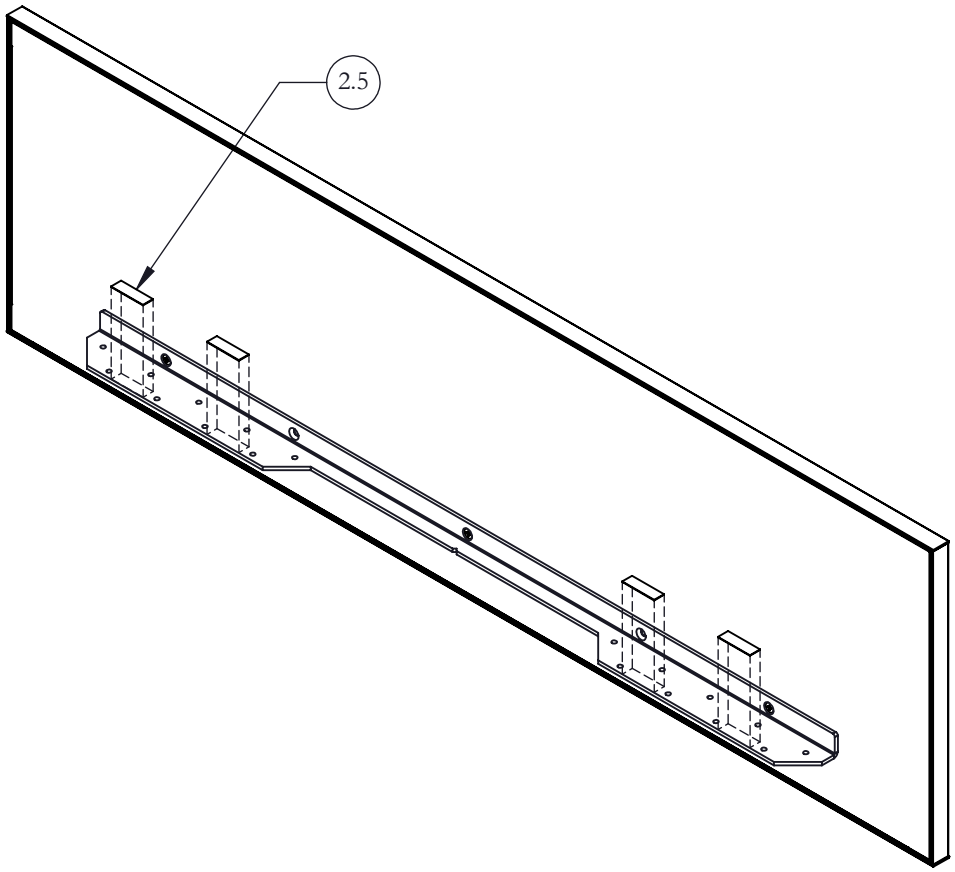

STEP 6a: Unmount the screen, attach Shims by the edge of the bracket as illustrated and reinstall Screen.

NOTE: Only applicable if the Screen is leaning towards Desk after mounting

ATTACH SHIMS

OPTIONAL

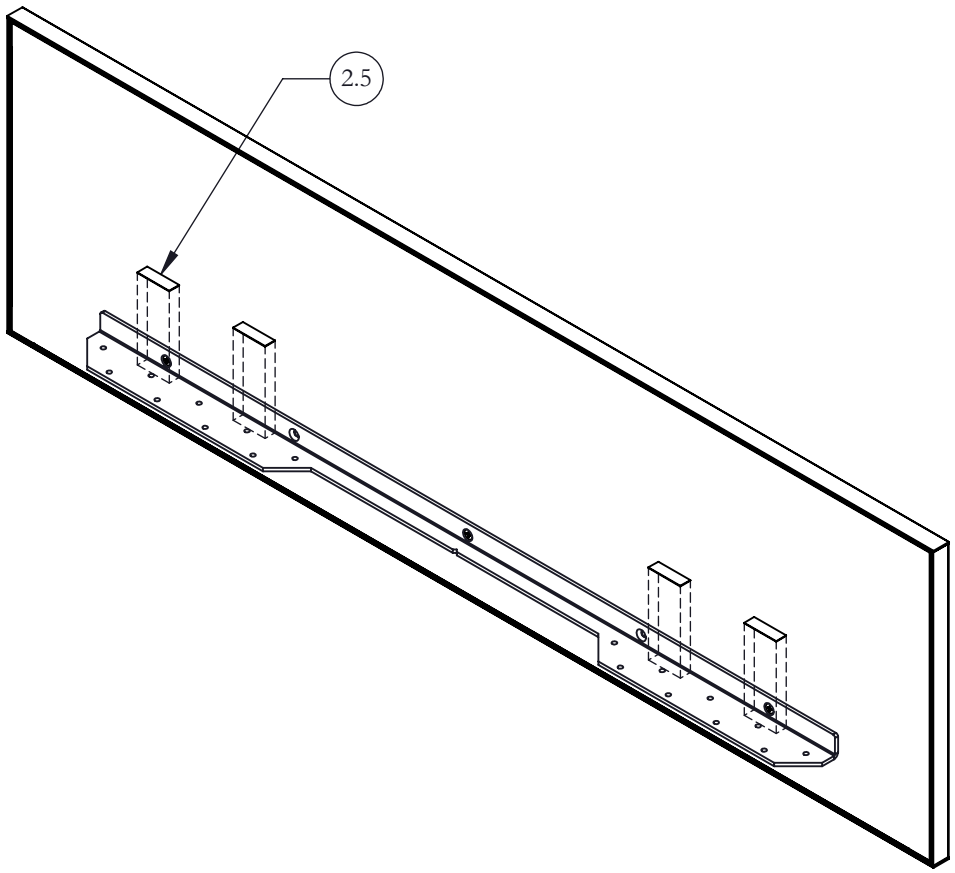

STEP 6b: Unmount the screen and attach Shims on the screen's side of the bracket as illustrated and reinstall screen.

NOTE: Only applicable if Screen is leaning away from the Desk after mounting.

Fixed Centre Screen - Glass (HNBCFG)

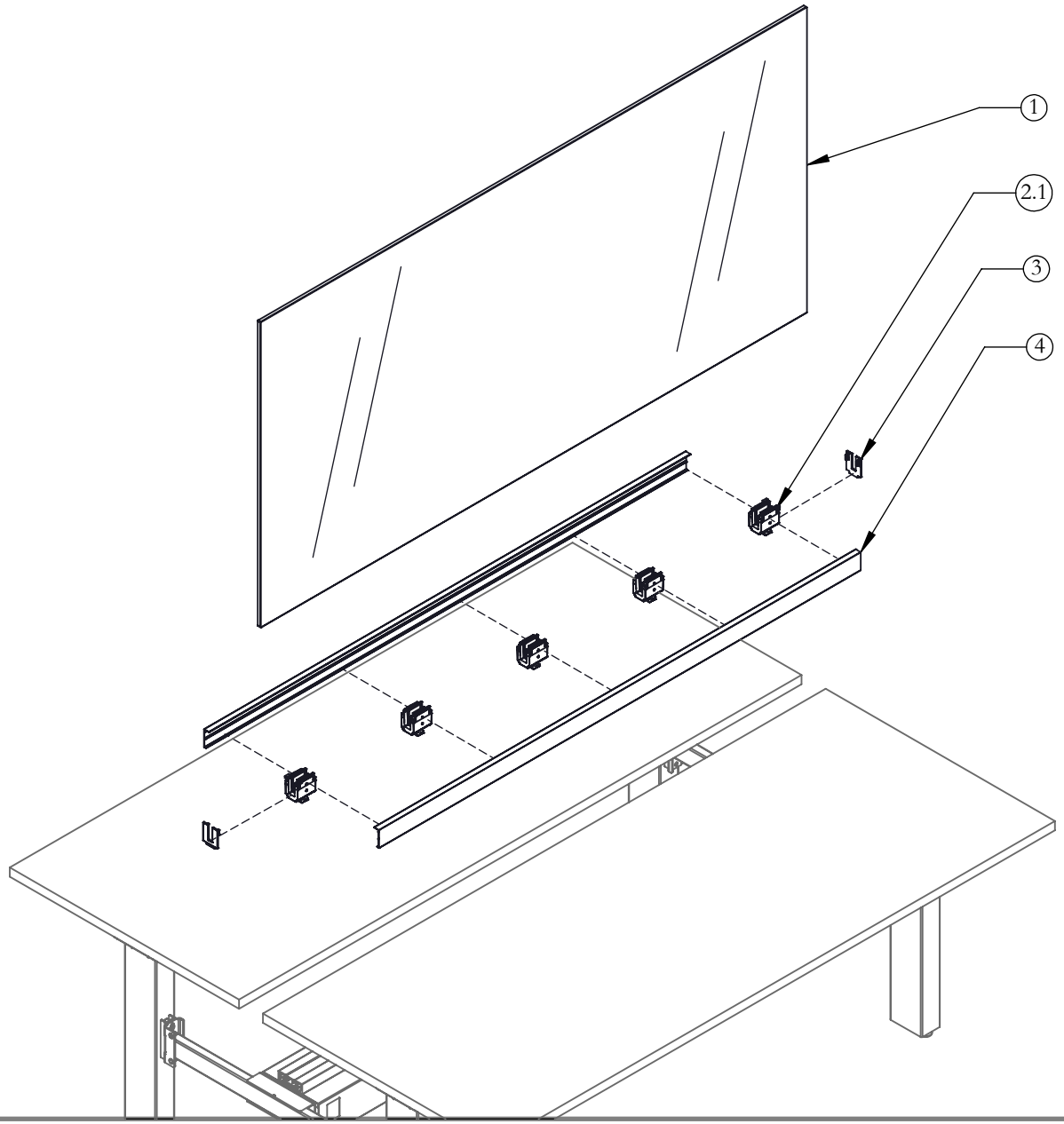

Part & Product Identification

ITEM NO.	ILLUSTRATION	PART NUMBER	DESCRIPTION	QTY.
1	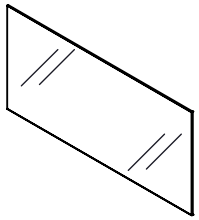	H01-1860-X	10mm CLEAR (CL) TEMPERED GLASS, FULL STYLE, FIXED HEIGHT SCREEN, HAB	1
		H02-0467-X	10mm FROST (FT) ETCHED TEMPERED GLASS, FULL STYLE, FIXED HEIGHT SCREEN, HAB	1
2. 10MM GLASS CLAMP SUB ASSY. (N09-4751) (SEE TABLE ON PAGE 3 FOR QTY)				
2.1	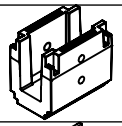	A25-0395	CLAMP, WOOD CASUAL SCREEN	1
2.2		A25-0396	SPACER, WOOD CASUAL SCREEN	2
2.3	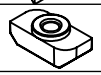	A25-0386	MOUNTING NUT	1
2.4		E01-0760	SET SCREW,1/4-20 X 1/4, HEX SOCKET, BLACK , FLAT POINT	3
2.5		E01-0761	5/16-18x7/8" FLAT HEAD HEX SOCKET. SCREW (82 DEGREE)	1
2.6		A09-0032	SPRING	2
2.7	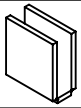	B05-0073	RUBBER PAD	1
3	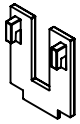	A25-0455	END CAP GLASS FIXED HT SCREEN - HAB	2
4	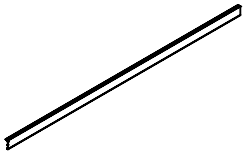	N09-5089-X	BOTTOM COVER ASSY, 10MM GLASS SCREEN -HAB	2

INSERT CLAMP INTO CENTRE RAIL

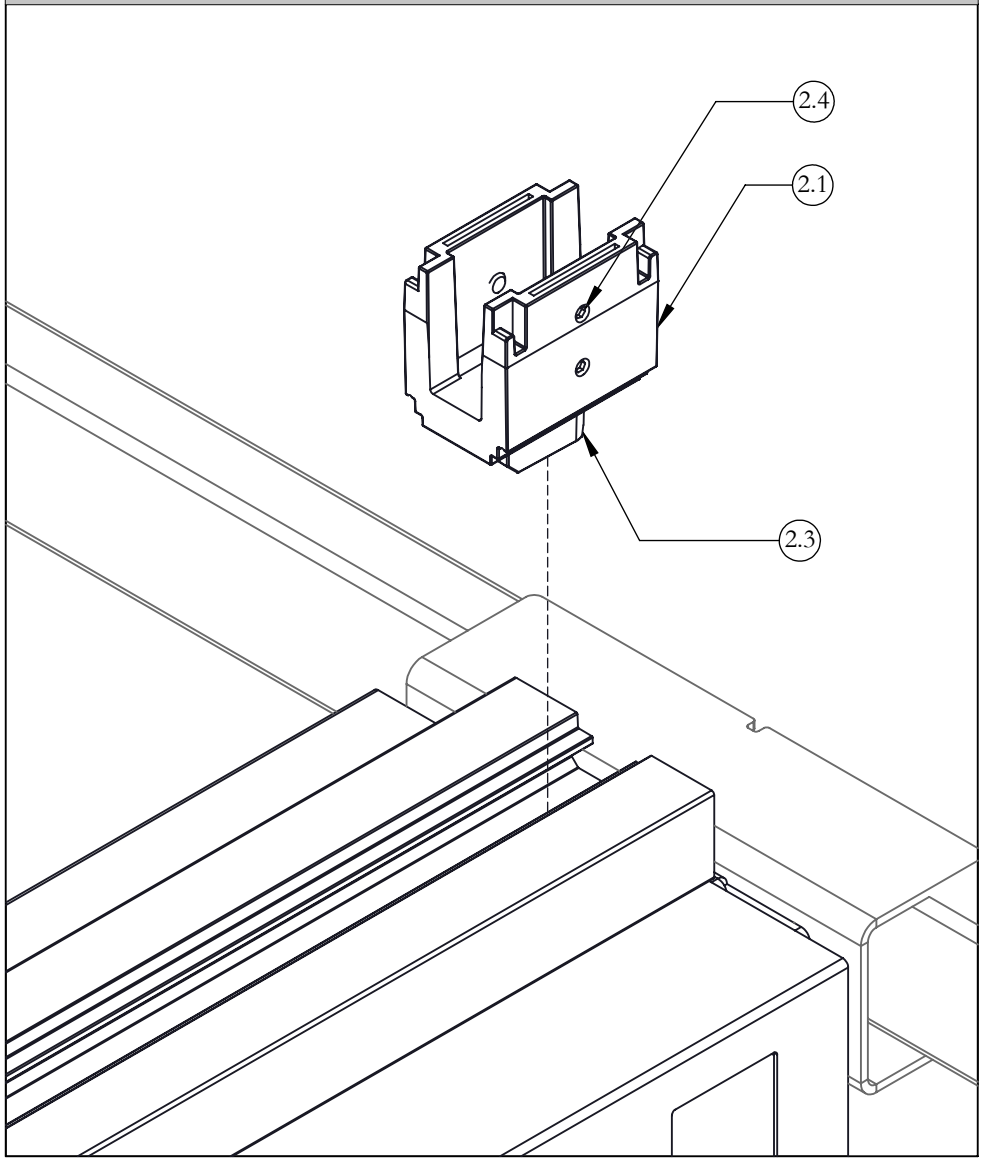

STEP 1: Place Wood Clamp into Centre Rail.

NOTE: Make sure the two screws face the same side on all clamps

CLAMP LOCATIONS

EQ = Eually Spaced

FRONT VIEW

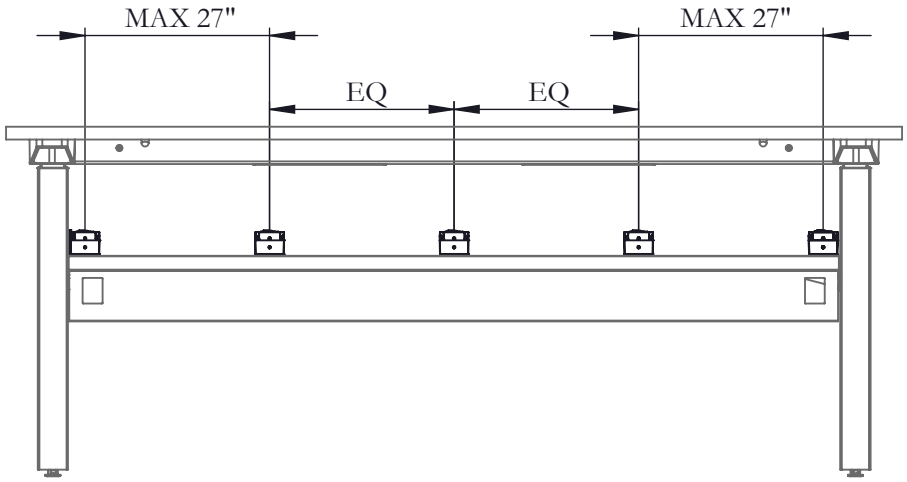

NOTE: Make sure to USE ALL THE CLAMPS PROVIDED and space them as indicated on these drawings.

Screen Length	# of Clamps
46"	3
52-64"	4
70-82"	5
88-94"	6

NOTE: The quantity of Clamps required varies with length. Please follow the illustration above for Clamps quantity & location.

INSERT SPRINGS

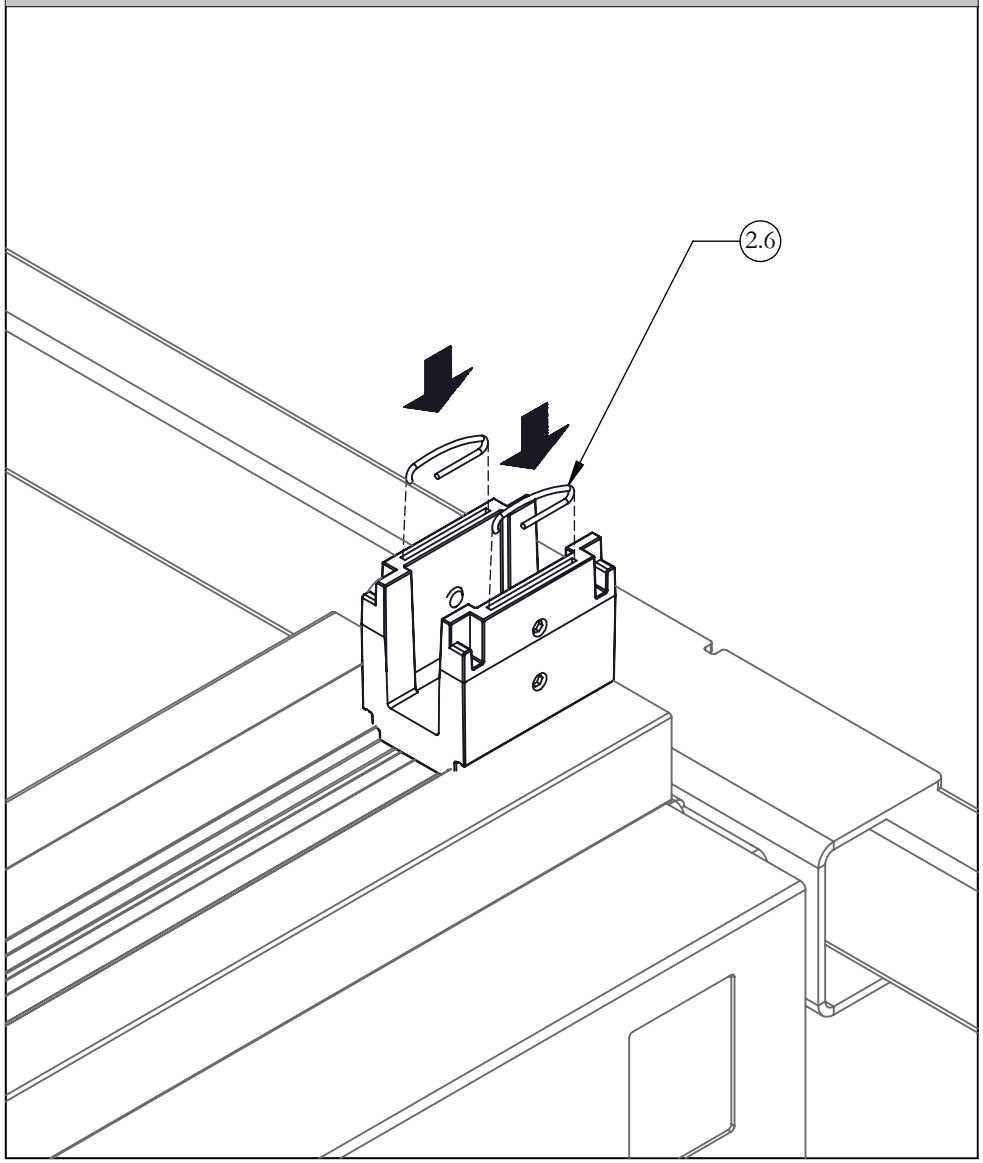

STEP 2: Insert Springs into the Clamps' slots.

LOCK CLAMP

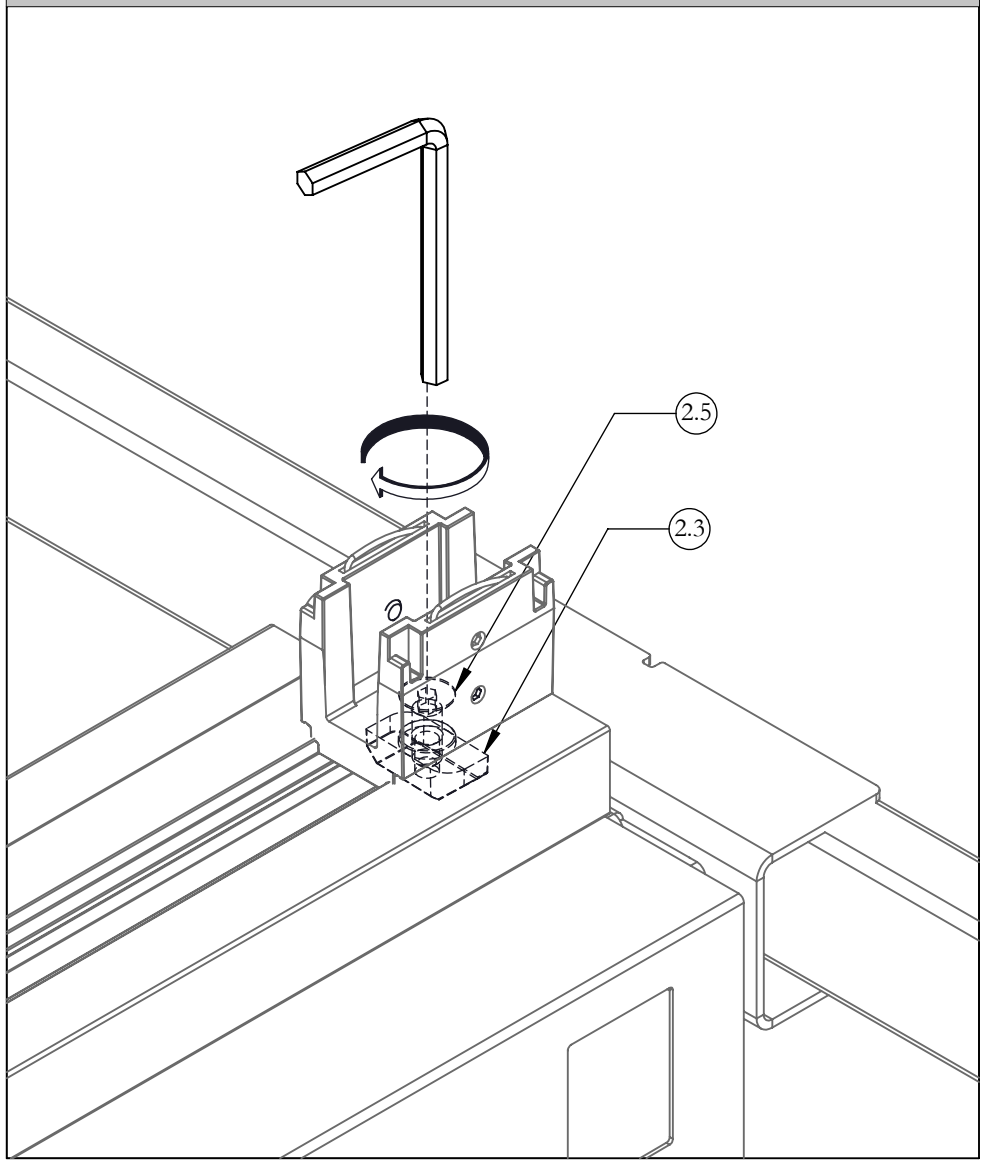

STEP 3: Use Allen Key to rotate Mounting Nuts and lock Clamps into Centre Rail.

INSTALL END CAPS

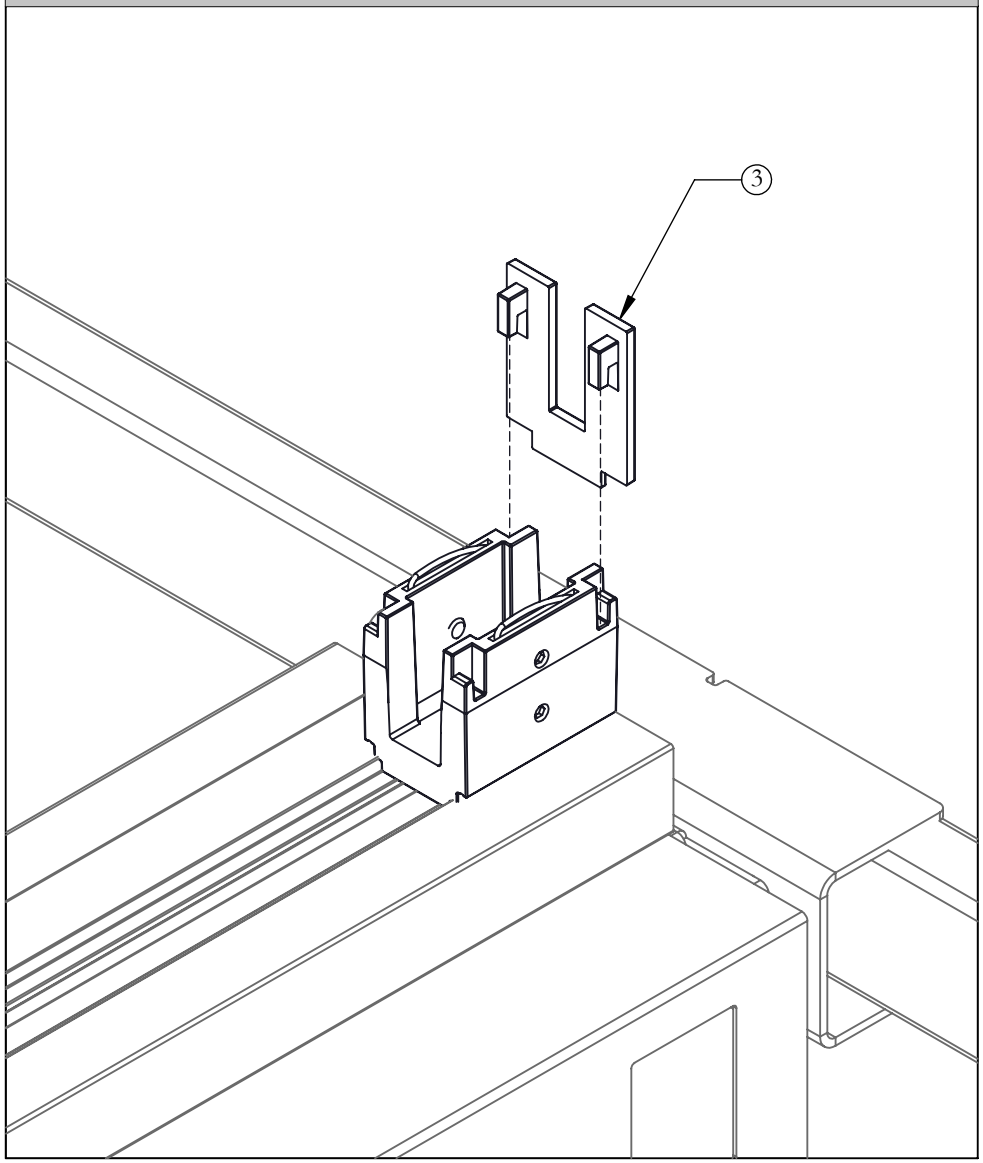

STEP 4: Insert both End Caps into Clamps

INSERT RUBBER PADS AND SCREEN

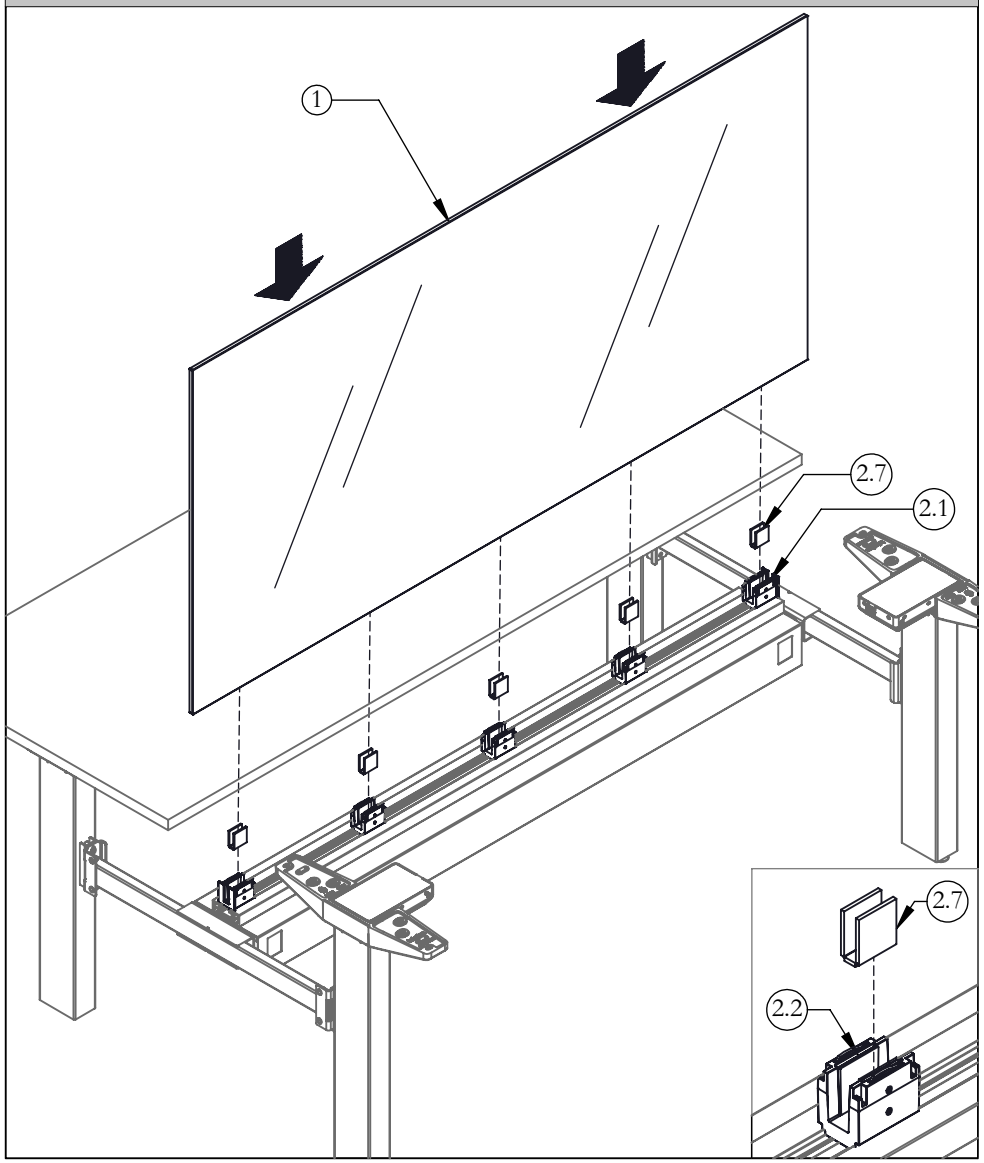

STEP 5: Insert Rubber pads and Glass Screen into Clamps, as shown.

INSERT SPACERS

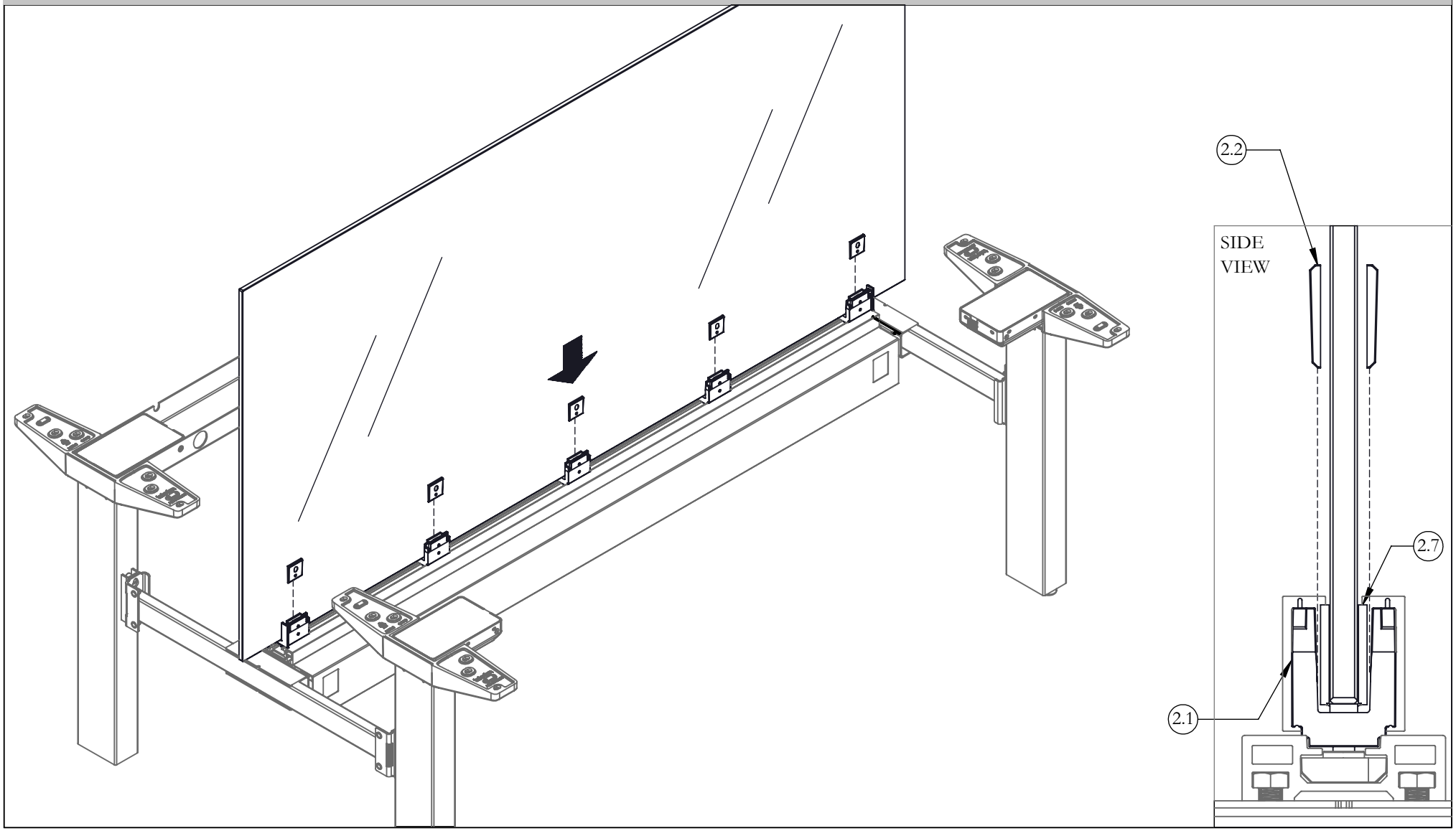

STEP 6: Insert spacers as shwon, on one side first, in between the Rubber Pads and the Clamps. Insert remaining spacers on the other side

LOCK IN PLACE & LEVEL SCREEN (SIDE 1)

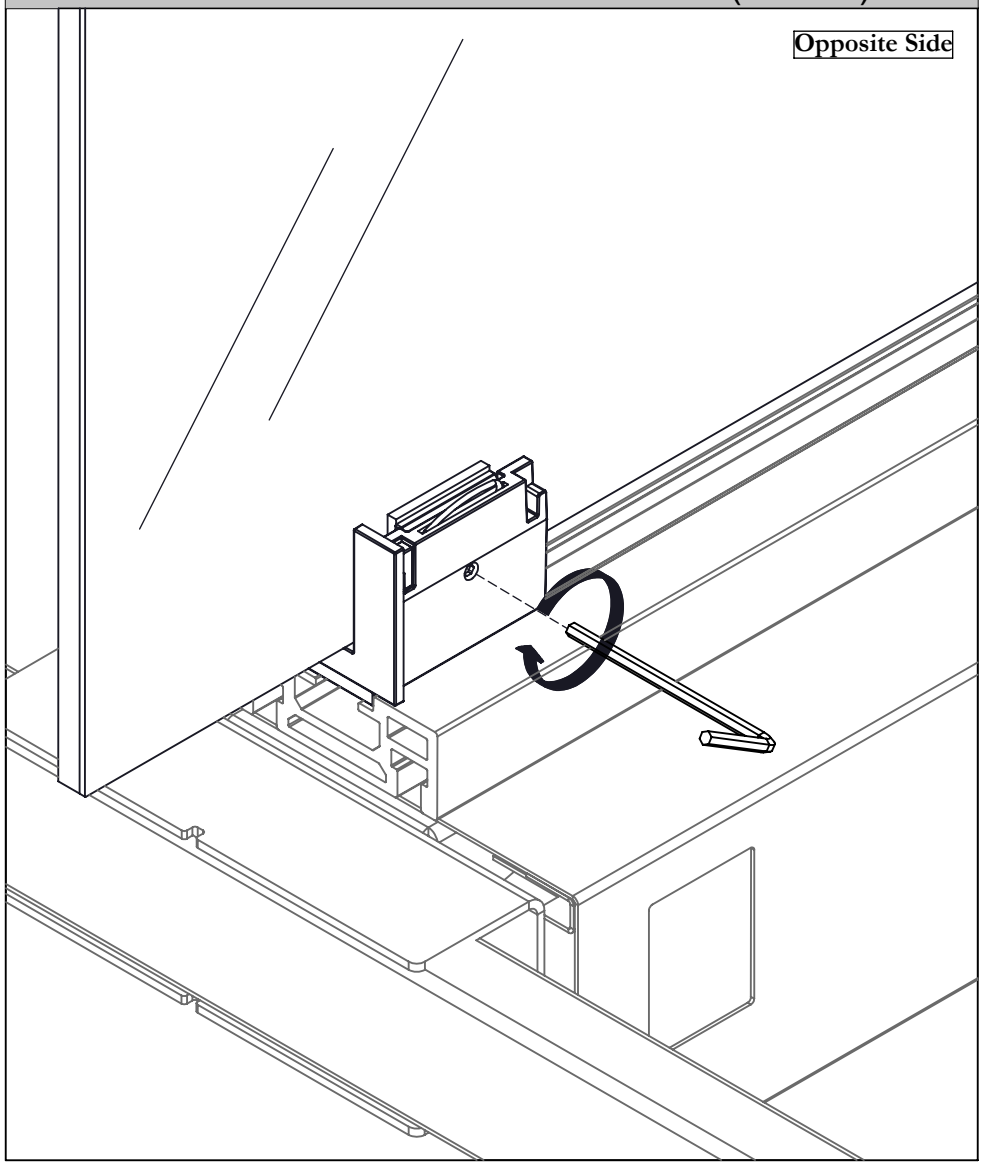

STEP 7a: Tighten Set Screws on both sides at the same time to make sure the Glass is located in the centre of the Clamps. Tighten the Set Screw on side 1 (left image) to secure the screen and the Screws on side 2 (right image) to level the screen.

NOTE: Tighten the screws on both sides of the screen together to ensure the screen is located in the centre of the Clamps.

LOCK IN PLACE & LEVEL SCREEN (SIDE 2)

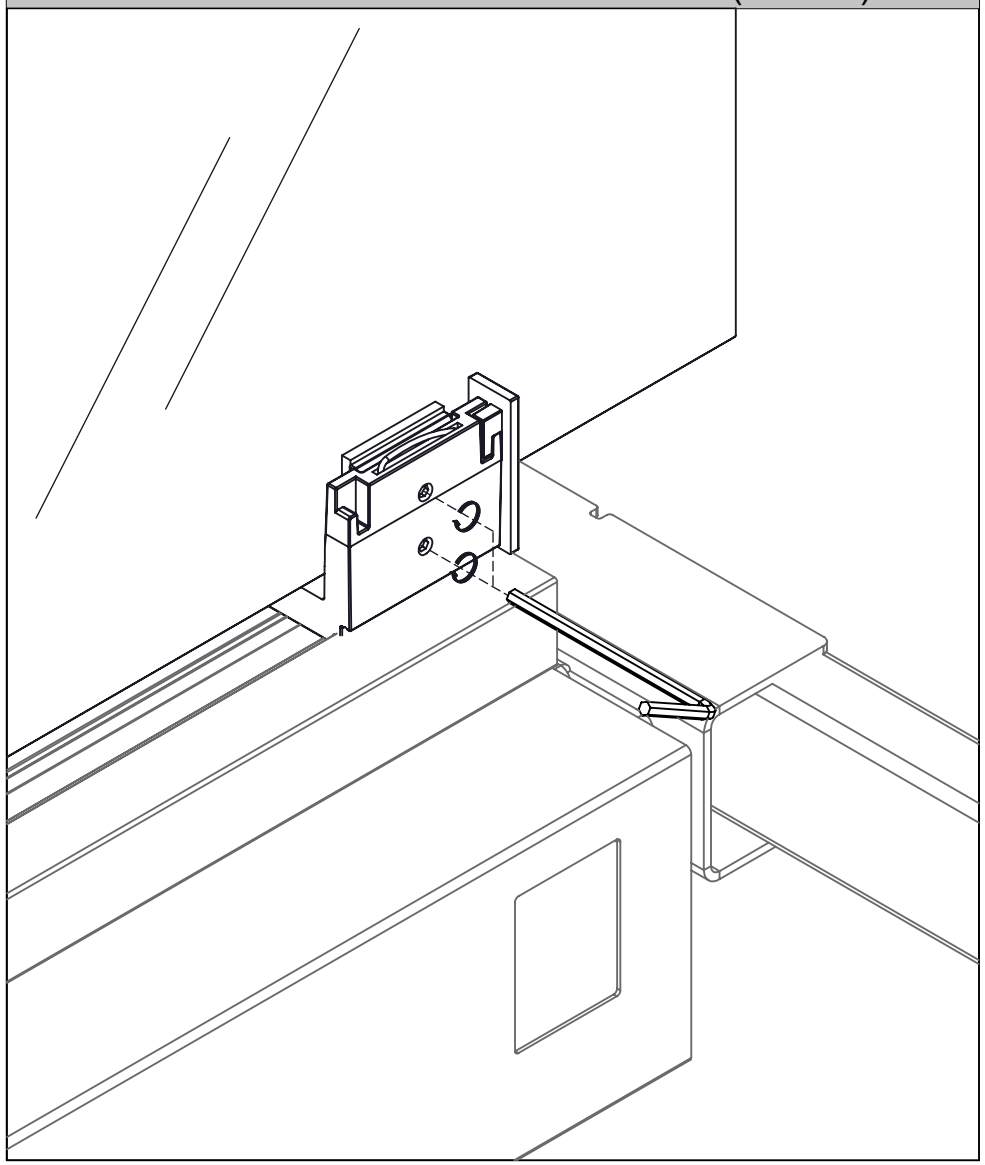

STEP 7b: Tighten Set Screws on both sides at the same time to make sure the Glass is located in the centre of the Clamps. Tighten the Set Screw on side 1 (left image) to secure the screen and the Screws on side 2 (right image) to level the screen.

NOTE: Tighten the screws on both sides of the screen together to ensure the screen is located in the centre of the Clamps.

INSTALL BOTTOM COVERS

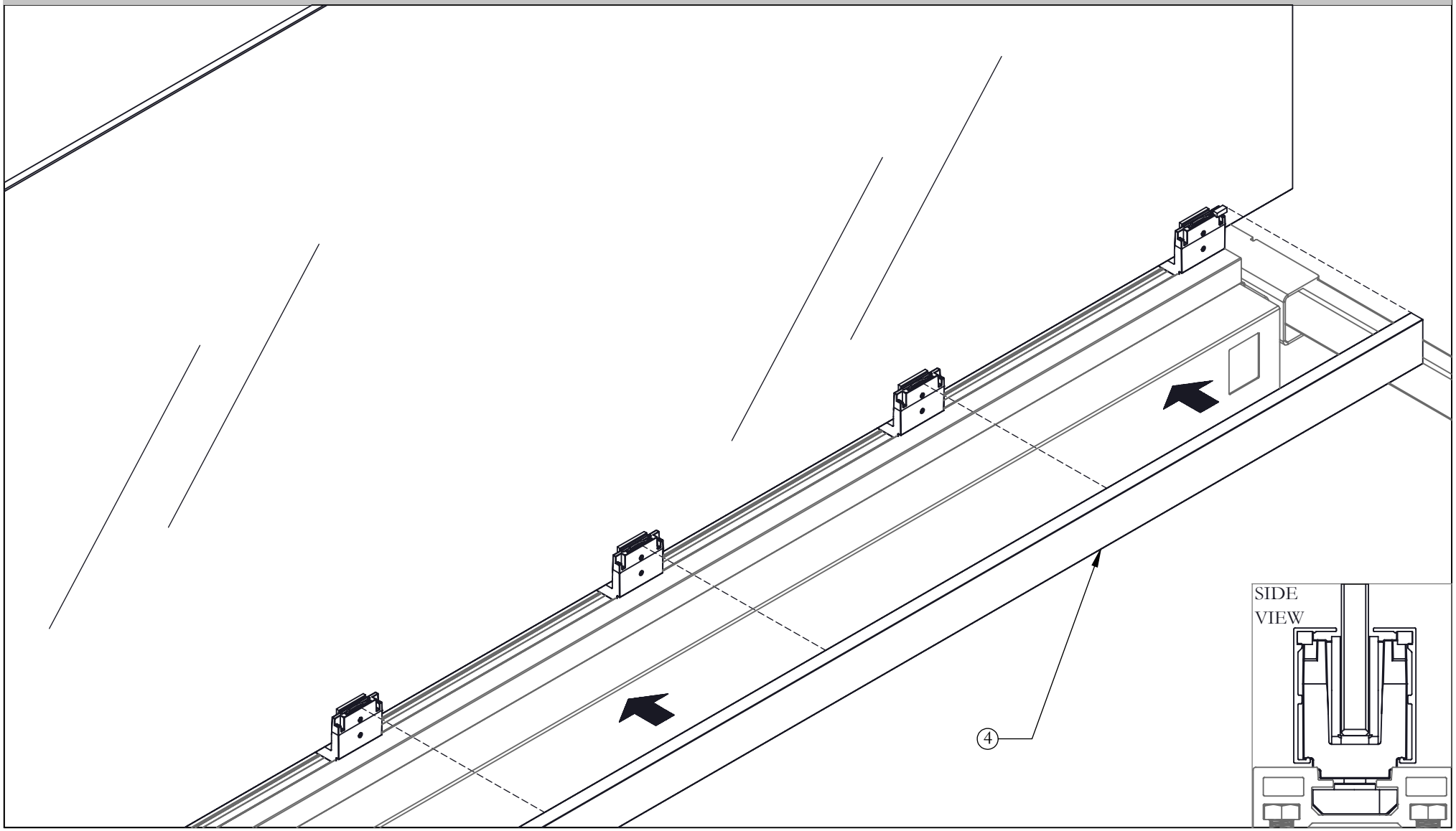

STEP 8: Mount Bottom Covers on both sides of Clamps.

NOTE: Make sure Covers click on the springs.

Fixed Centre Screen - Solid (HNBCFS)

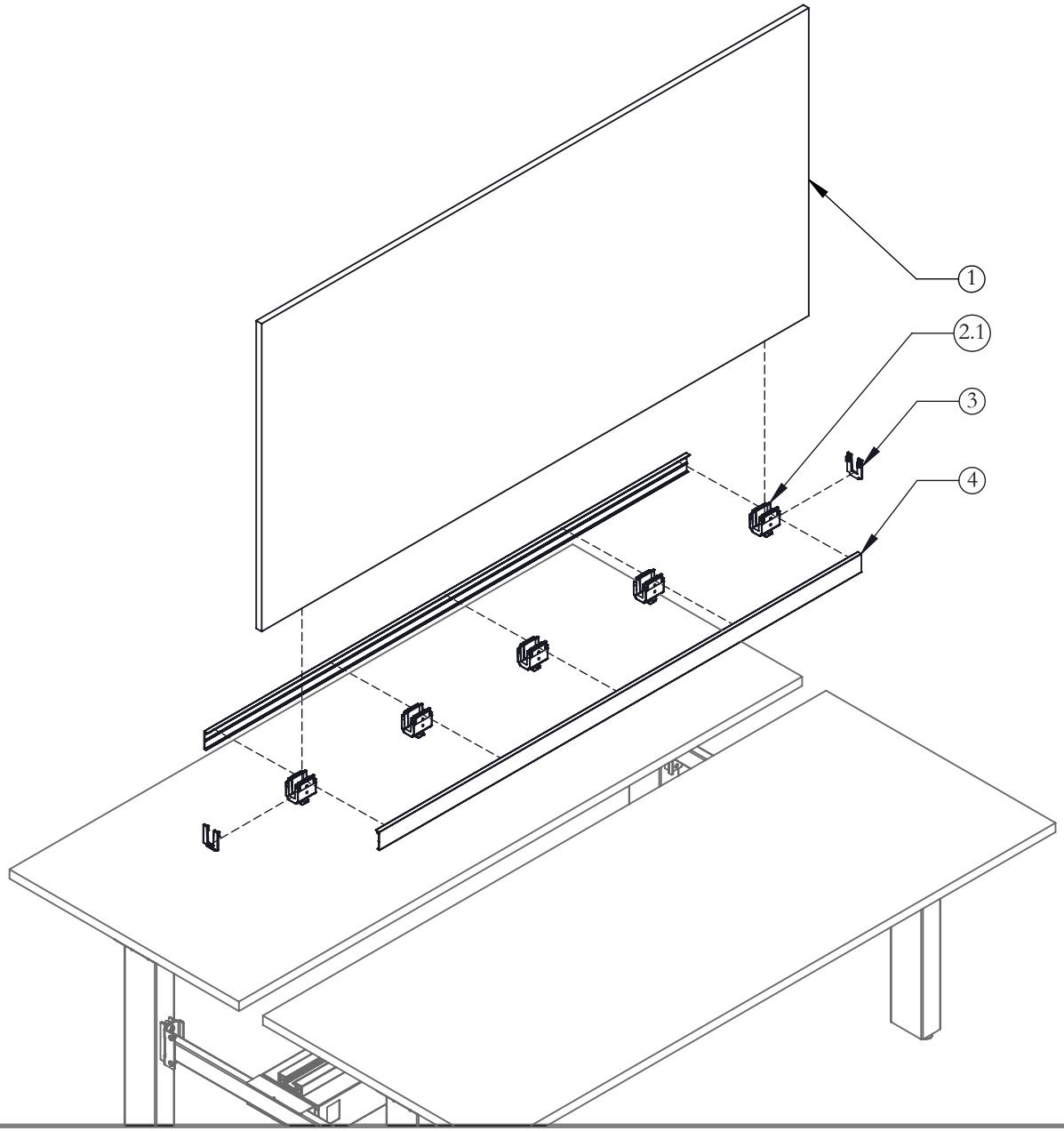

Part & Product Identification

ITEM NO.	ILLUSTRATION	PART NUMBER	DESCRIPTION	QTY.
1	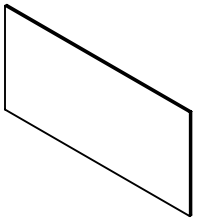	C05-8955-X	WOOD PANEL, FULL STYLE, FIXED HEIGHT SCREEN, HAB	1
2. WOOD CLAMP SUB ASSY. (N09-3980) (SEE PAGE 3 FOR QTY)				
2.1	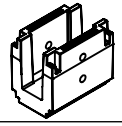	A25-0395	CLAMP, WOOD CASUAL SCREEN	1
2.2	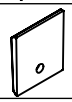	A25-0396	SPACER, WOOD CASUAL SCREEN	2
2.3	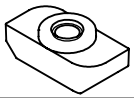	A25-0386	MOUNTING NUT	1
2.4		E01-0760	SET SCREW,1/4-20 X 1/4, HEX SOCKET, BLACK , FLAT POINT	1
2.5	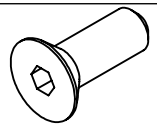	E01-0761	5/16-18x7/8" FLAT HEAD HEX SOCKET. SCREW (82 DEGREE)	1
2.6	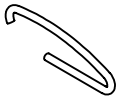	A09-0032	SPRING	2
3	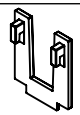	A25-0456	END CAP WOOD FIXED HT SCREEN -HAB	2
4	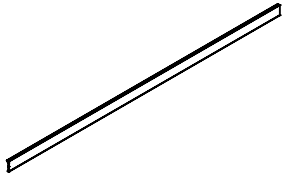	N09-5090-X	BOTTOM COVER ASSY WOOD SCREEN -HAB	2

INSERT CLAMP INTO CENTRE RAIL

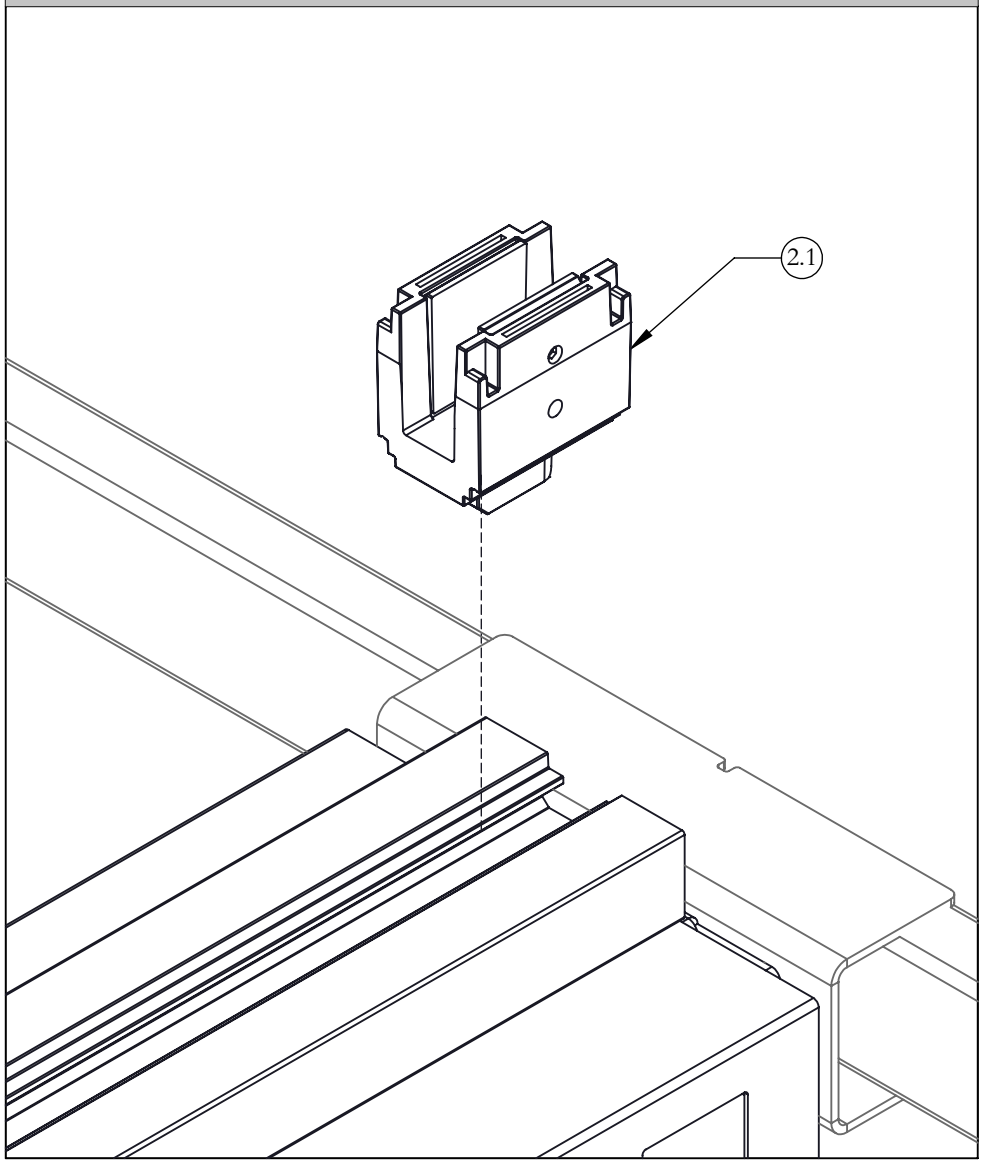

STEP 1: Place Wood Clamp into Centre Rail.

NOTE: Make sure the two screws face the same side on all clamps

CLAMP LOCATIONS

EQ = Eually Spaced

FRONT VIEW

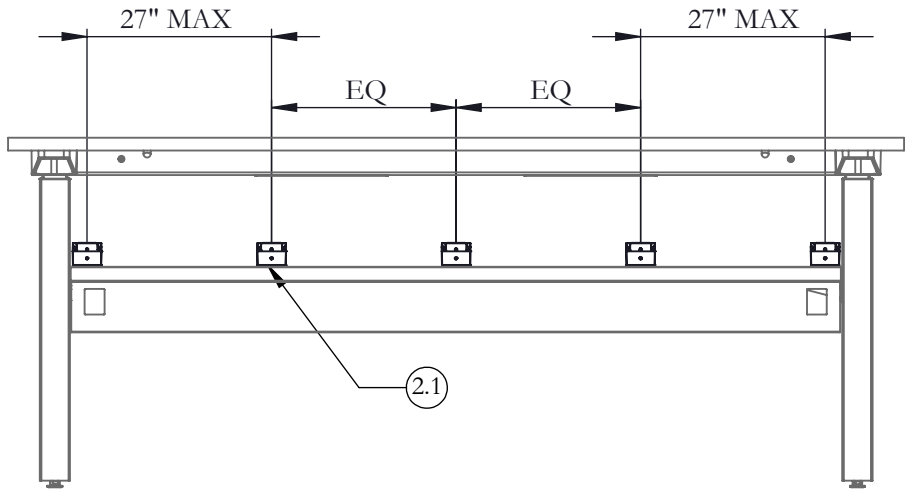

NOTE: Make sure to use all the clamps provided and space them as indicated on these drawings.

Screen Length	# of Clamps
46"	3
52-64"	4
70-82"	5
88-94"	6

NOTE: The quantity of Clamps required varies with length. Please follow the illustration above for Clamps quantity & location.

INSERT SPRINGS

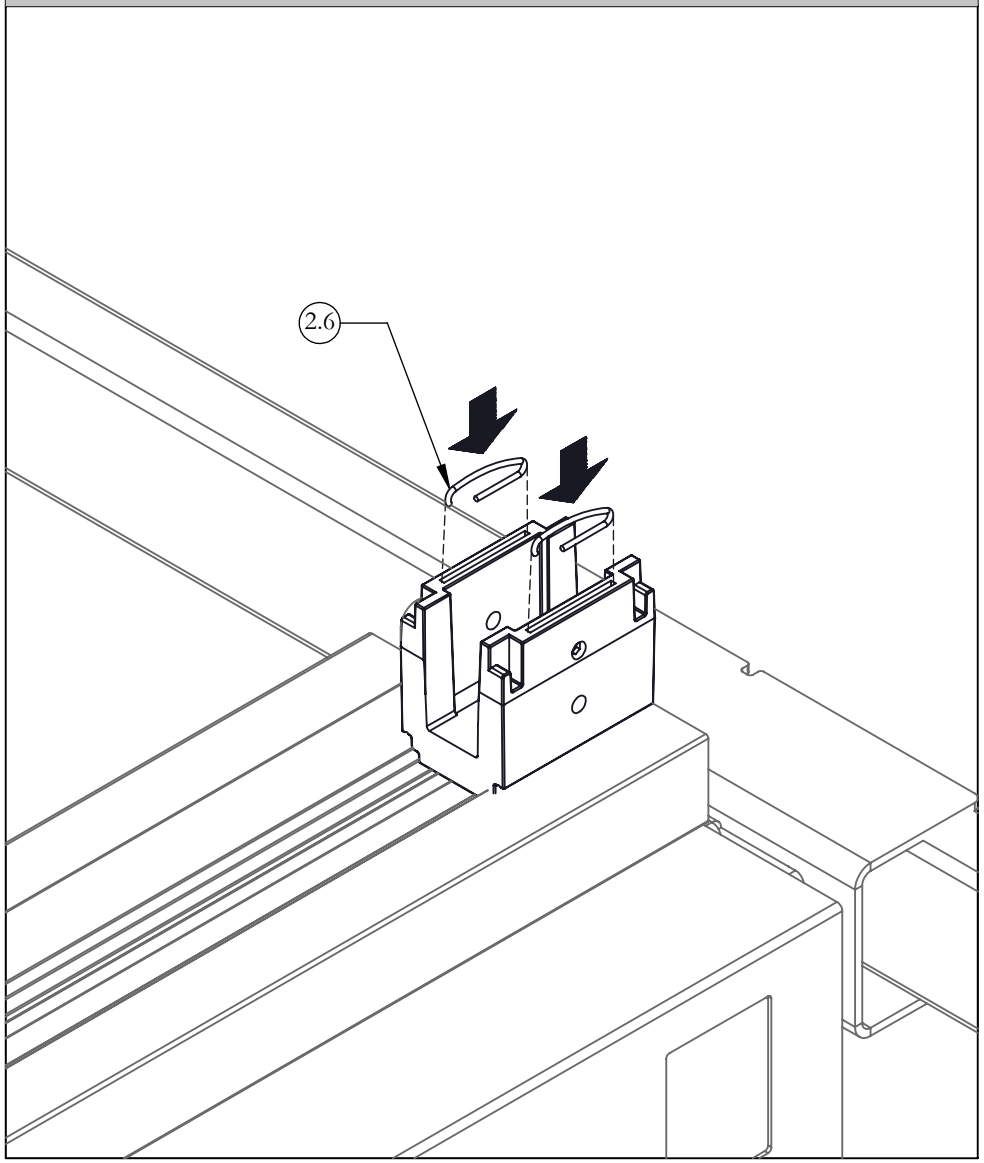

STEP 2: Insert Springs into the Clamps' slots.

LOCK CLAMP

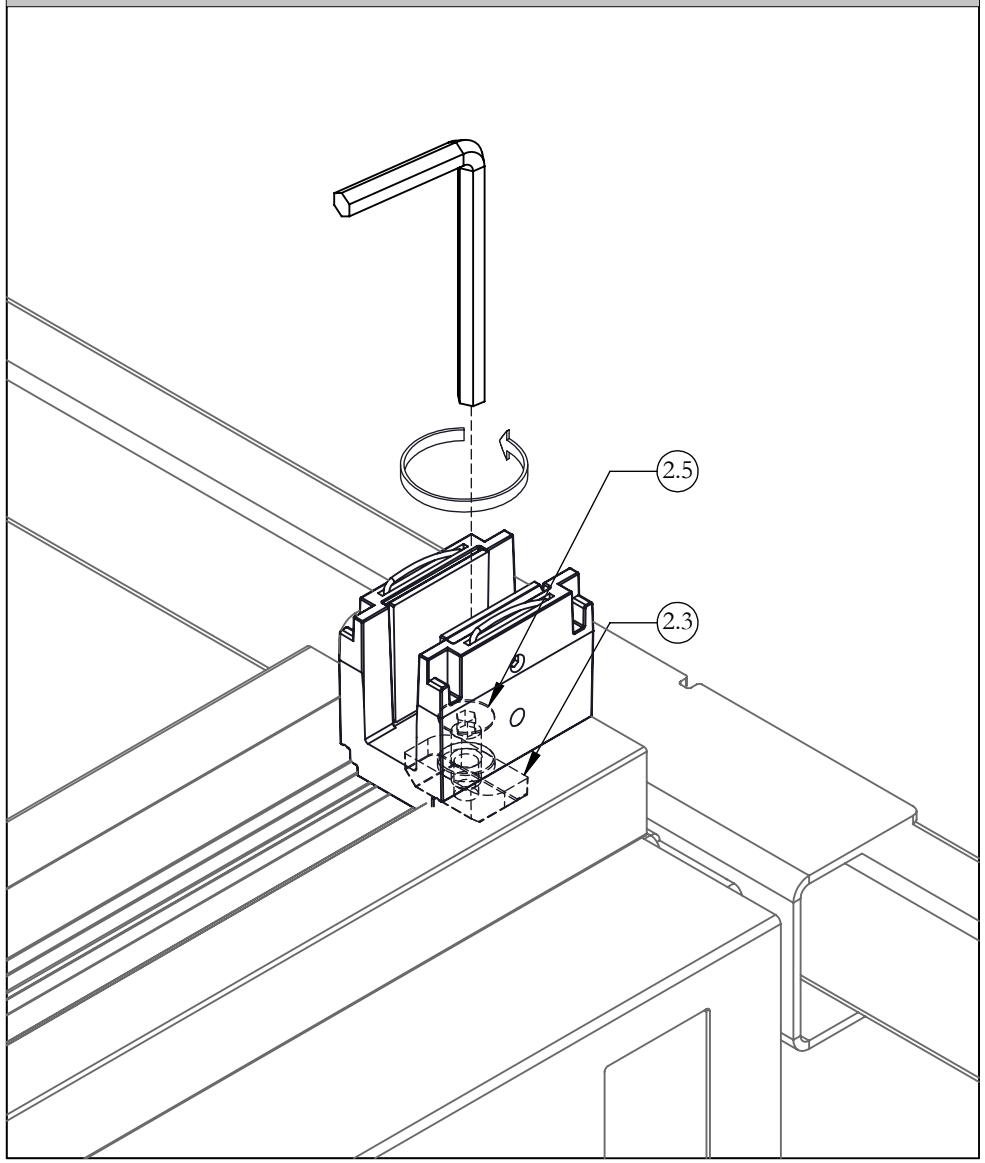

STEP 3: Use Alen Key to rotate Mounting Nuts and lock Clamps into Centre Rail.

INSTALL END CAPS

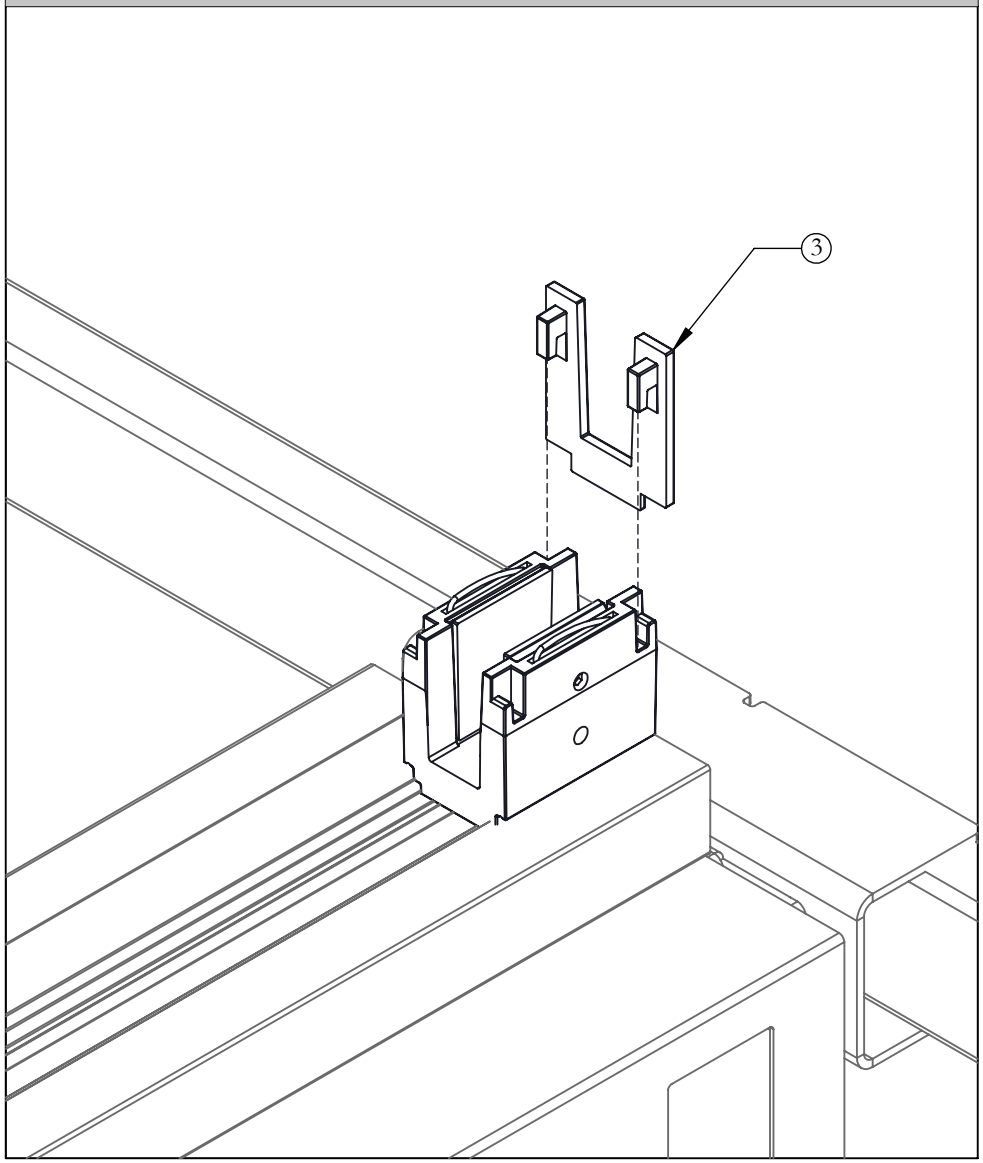

STEP 4: Insert both End Caps into Clamps

FRONT SPACERS AND SCREEN

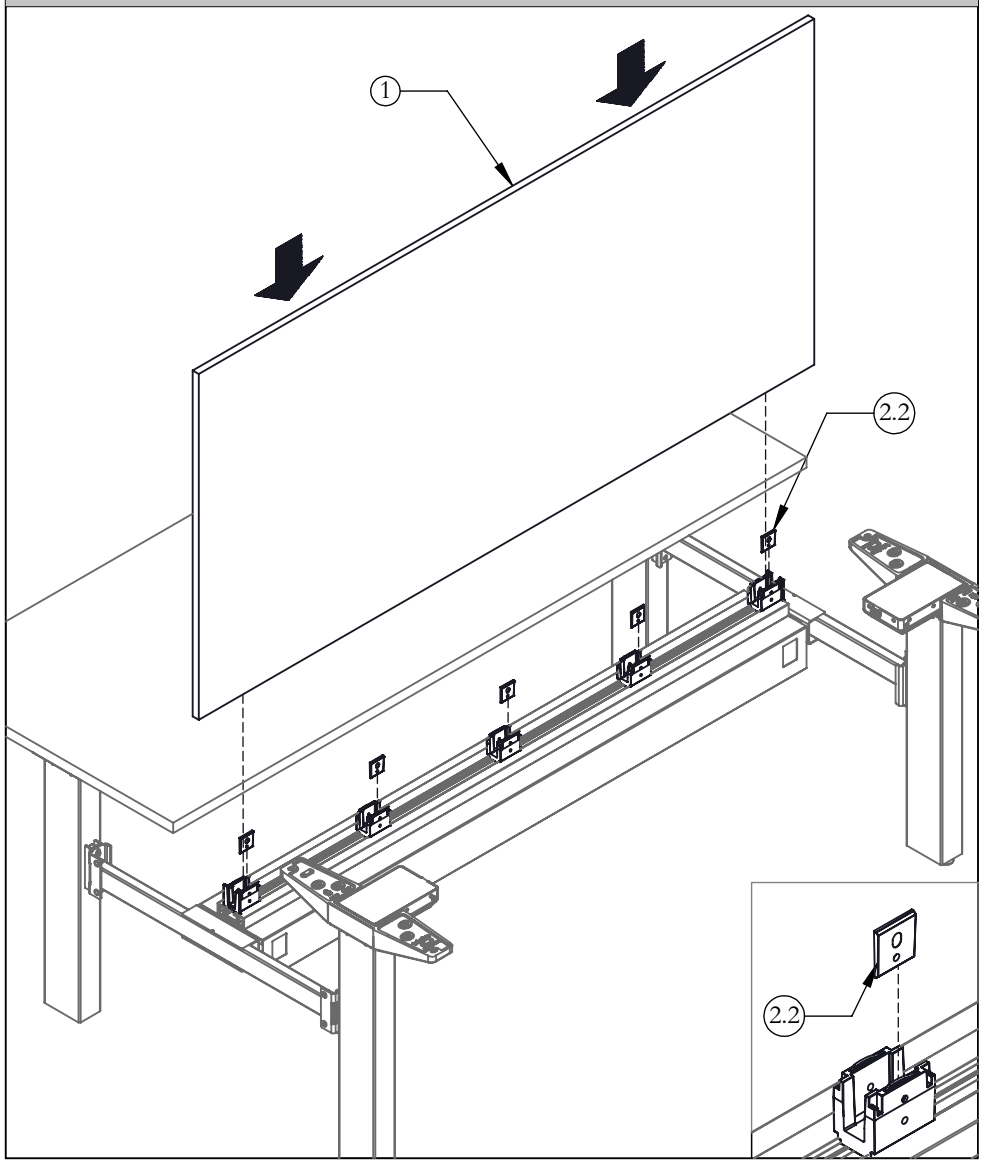

STEP 5: Insert front spacers and Screen into Clamps, as shown.

INSERT SPACERS

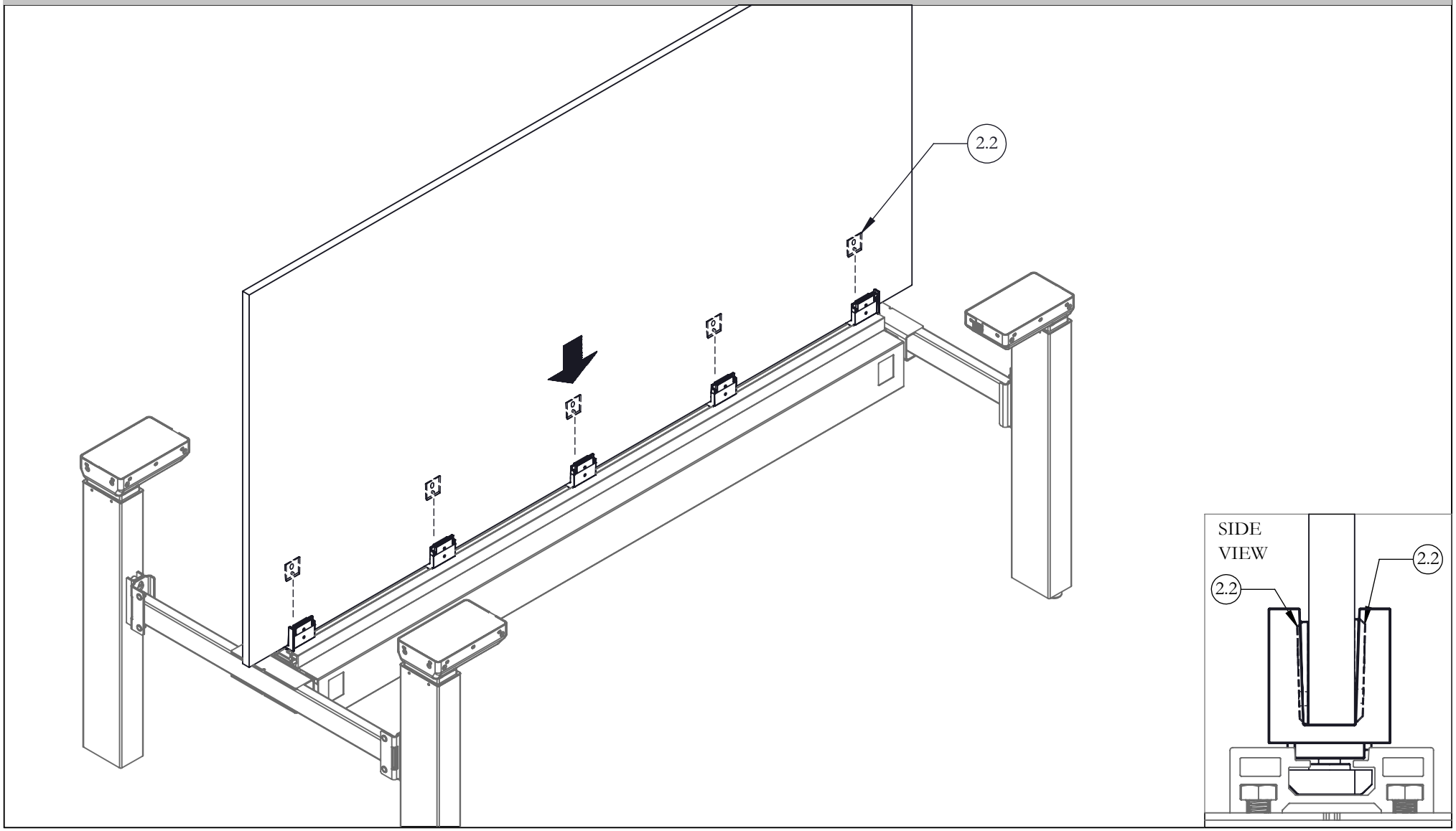

STEP 6: Insert the remaining spacers spacers as shown on the remaining side.

SECURE SCREEN

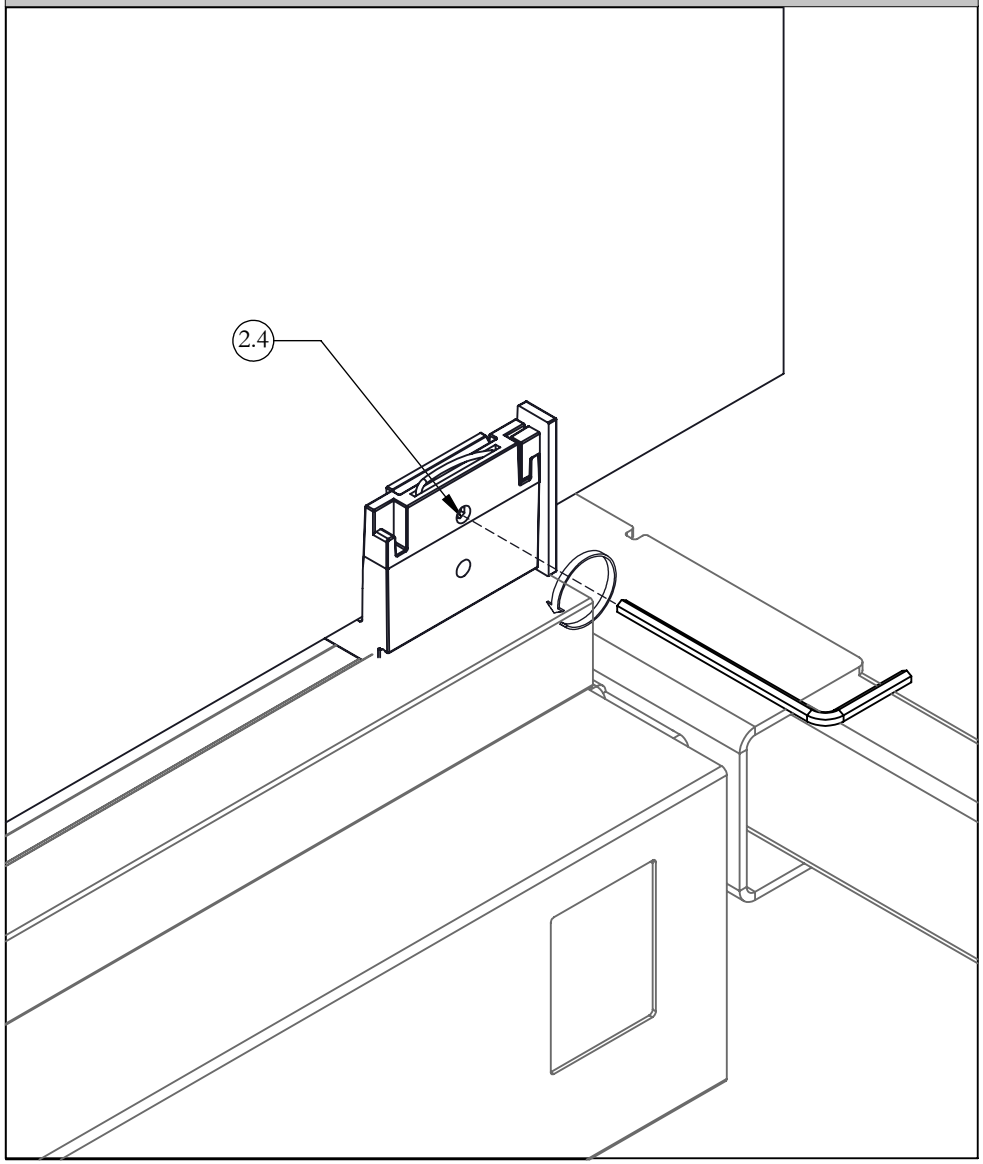

STEP 7: Secure Screen by tightening Set Screws as shown.

INSTALL BOTTOM COVERS

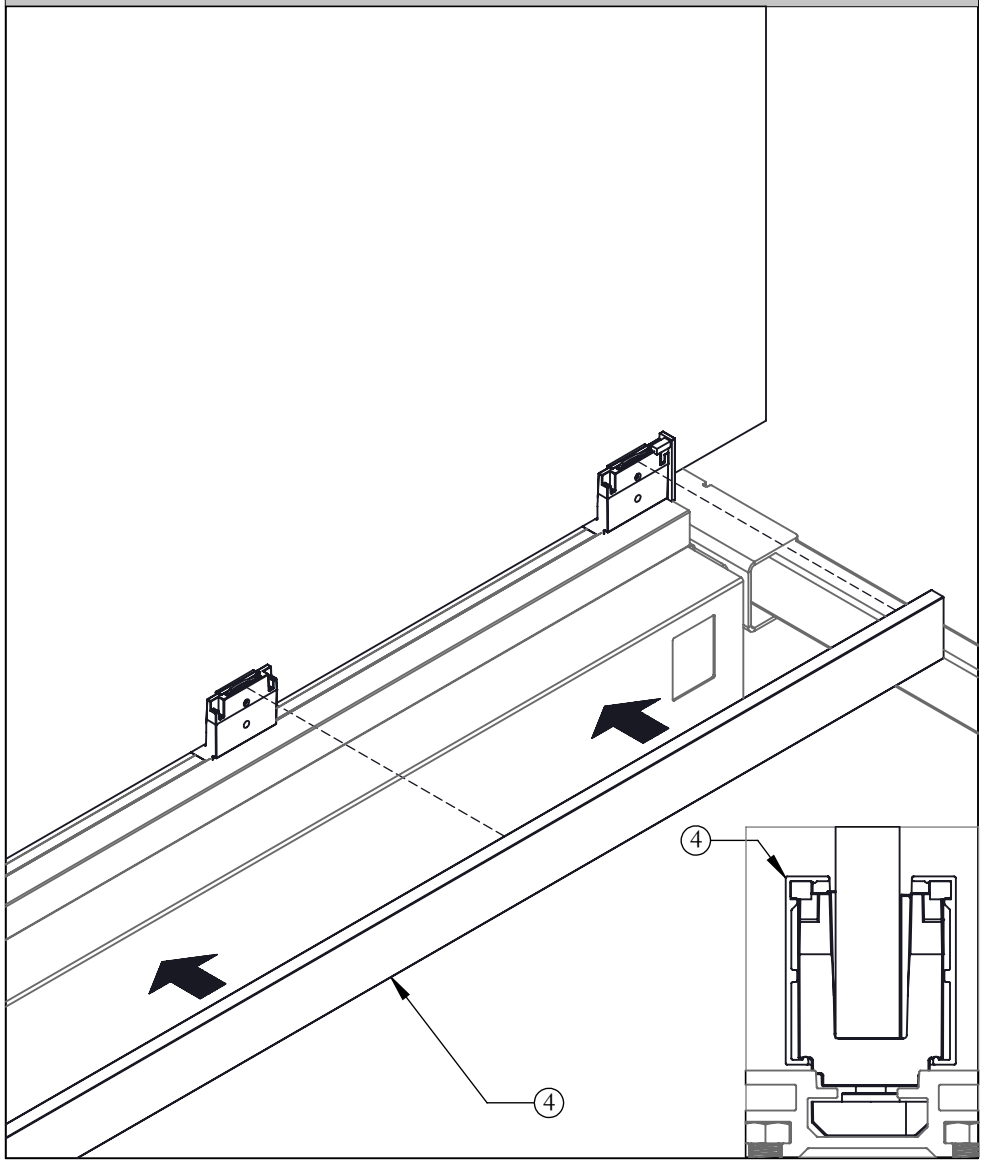

STEP 8: Mount Bottom Covers on both sides of Clamps.

NOTE: Make sure Covers click as they are pushed into place.

NAVIGATE FIXED CENTER SCREEN (HNBCFF)

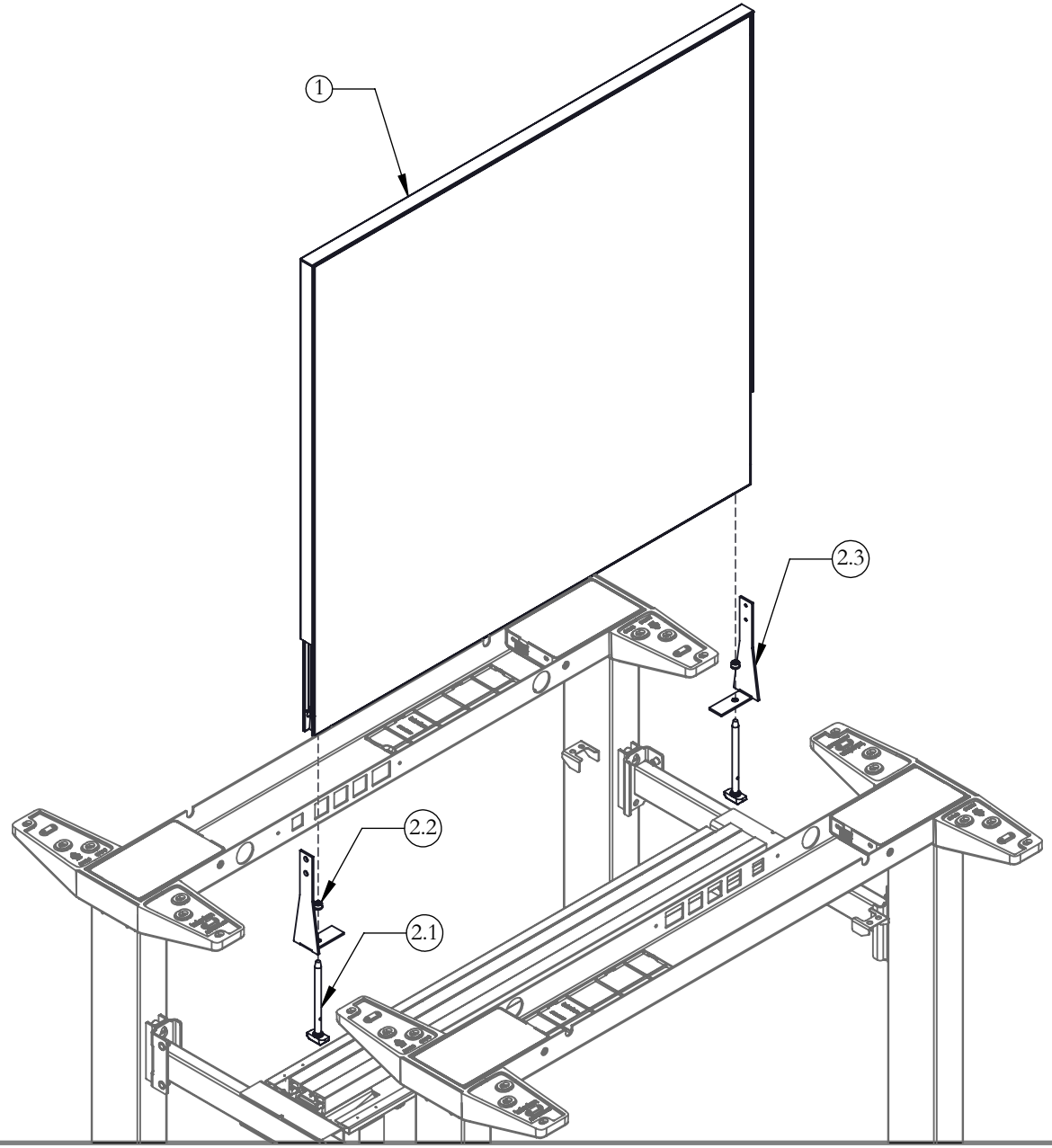

Part & Product Identification

ITEM NO.	PREVIEW	DESCRIPTION	PART NUMBER	QTY.
1	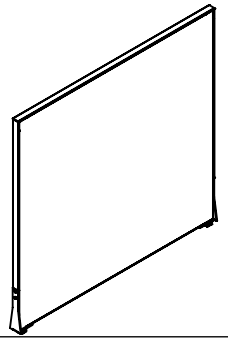	HNB FIXED CENTRE SCREEN - FRAMED FABRIC	HNBCFFXX	1
2	MOUNTING KIT (X03-0283)			1
2.1		SCREEN MOUNTING PIN	A18-0251	2
2.2	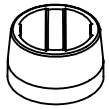	BUSHING - FABRIC SCREEN	B02-0469	2
2.3		SUPPORT BRKT - FABRIC SCREEN	A16-6165	2
2.4	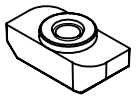	MOUNTING NUT	A25-0386	2
2.5	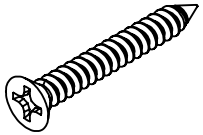	#8 X 1-1/4 TYPE AB FLAT QUADREX HD SELF TAPPING SCREW STEEL ZP	E01-0947	4

ASSEMBLE SUPPORT BRACKET

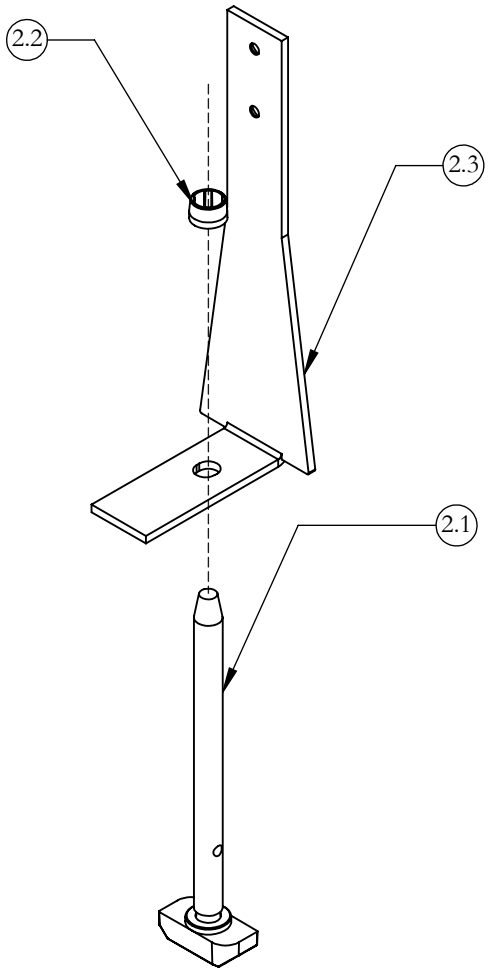

STEP 1: Attach Mounting Pin, Support Bracket and Bushing as shown

INSERT ALLEN KEY

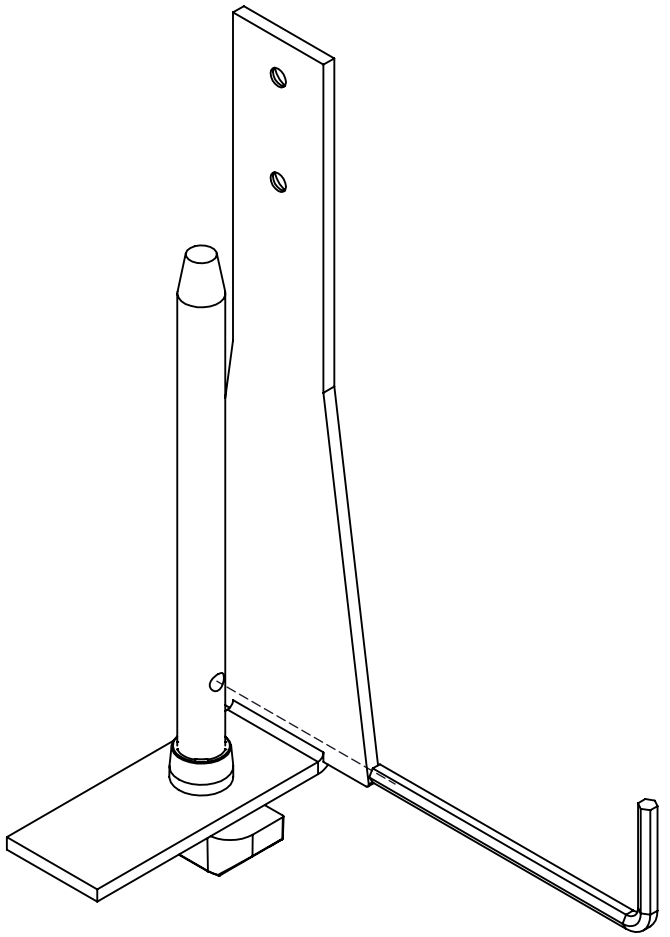

STEP 2: Insert Allen Key through the hole on the Mounting Pin

ATTACH SUPPORT BRACKETS

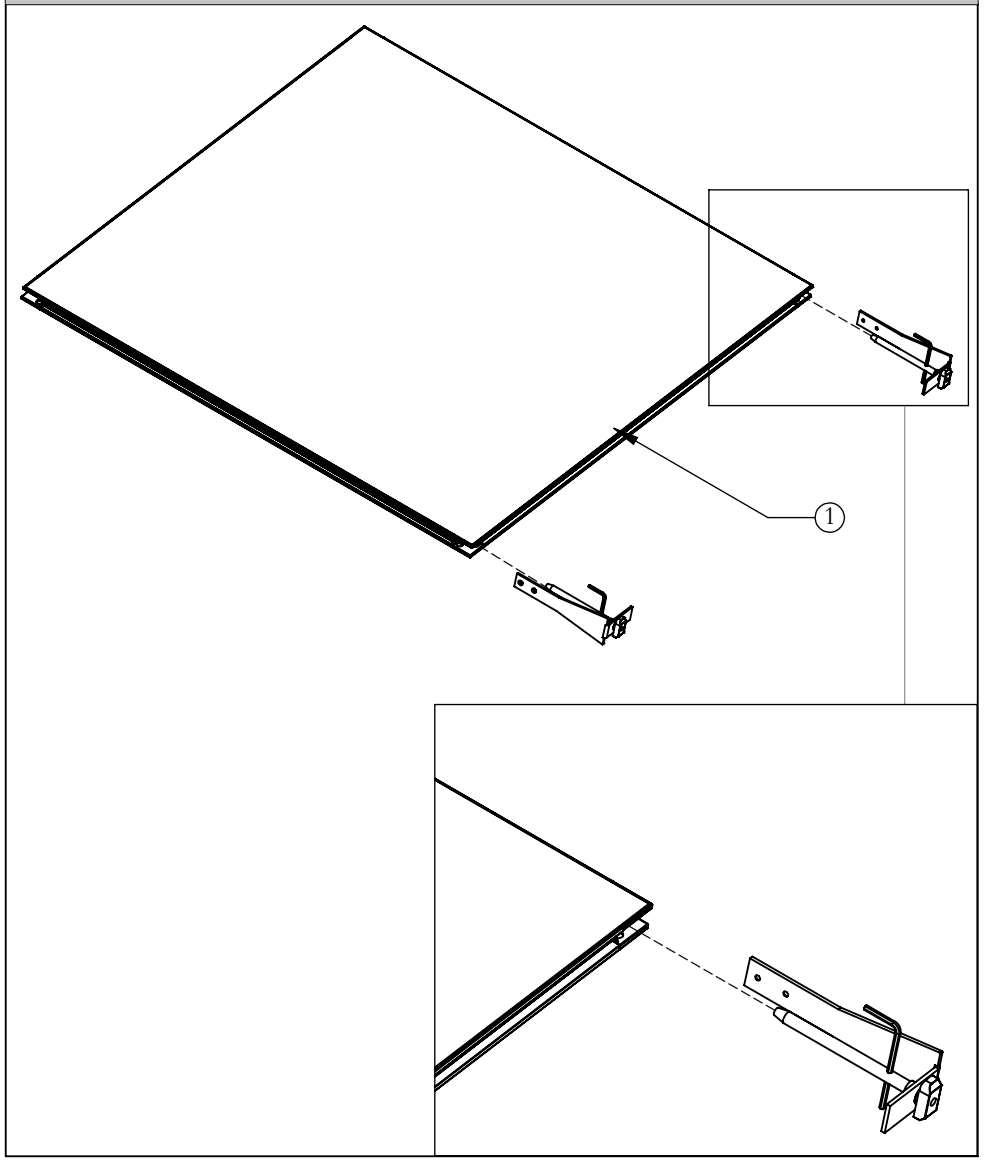

STEP 3: Insert Mounting Pin into the holes inside the Fabric Screen

ATTACH SCREEN

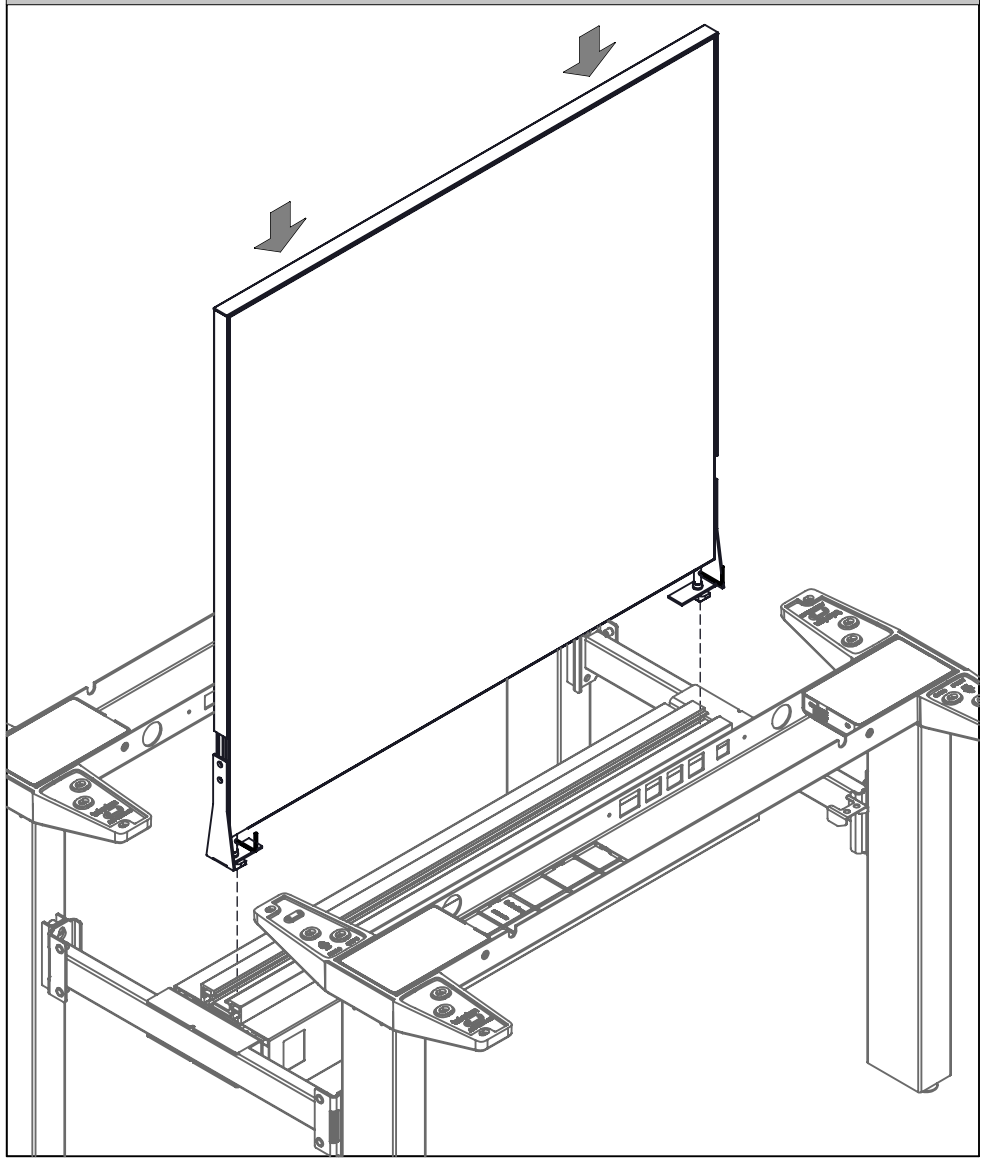

STEP 4: Rotate Mounting Nuts parallel with the Center Rail Channel, then attach Fabric Screen into the Center Rail Channel

TIGHTEN MOUNTING NUTS

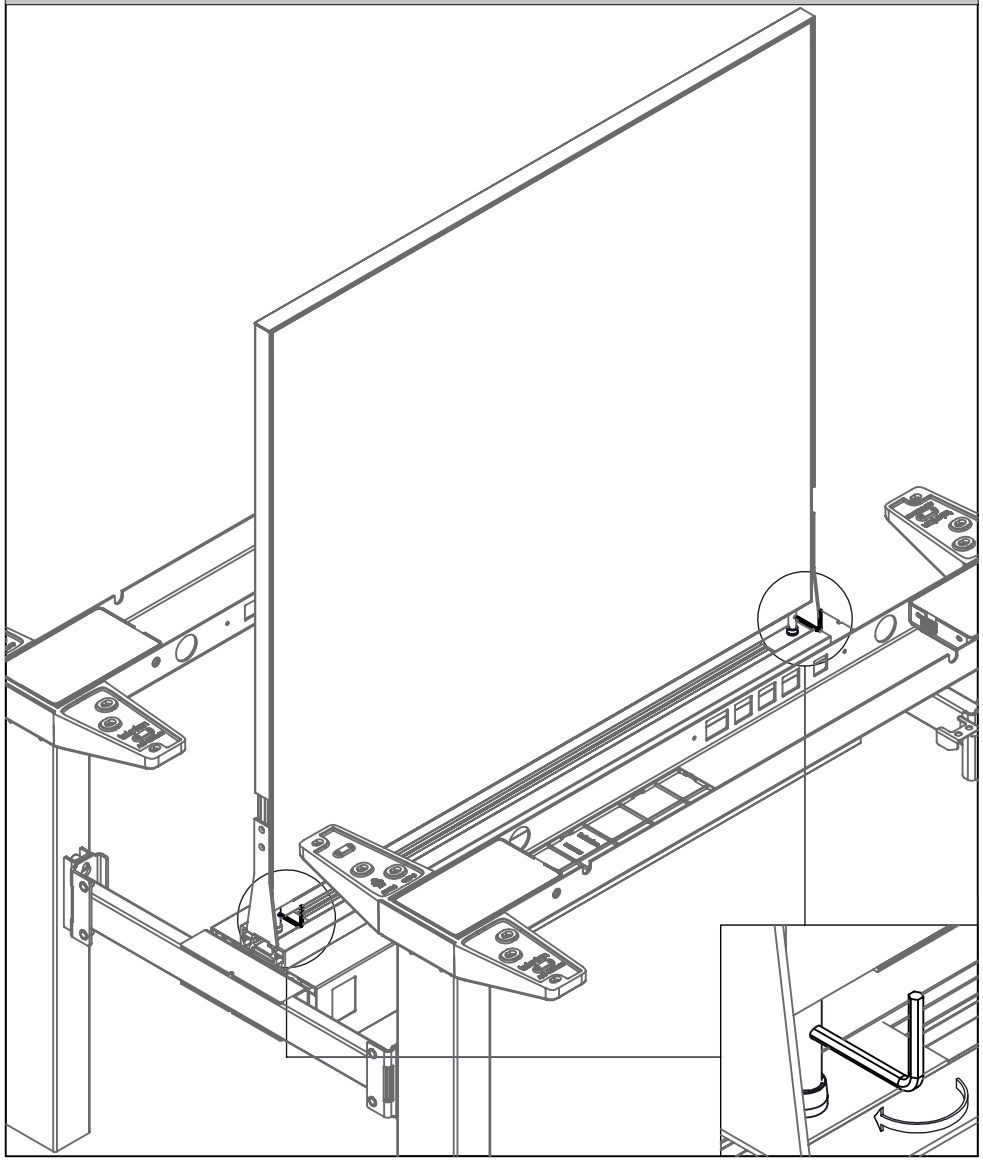

STEP 5: Rotate Allen Key to tighten Mounting Nuts

REMOVE ALLEN KEYS

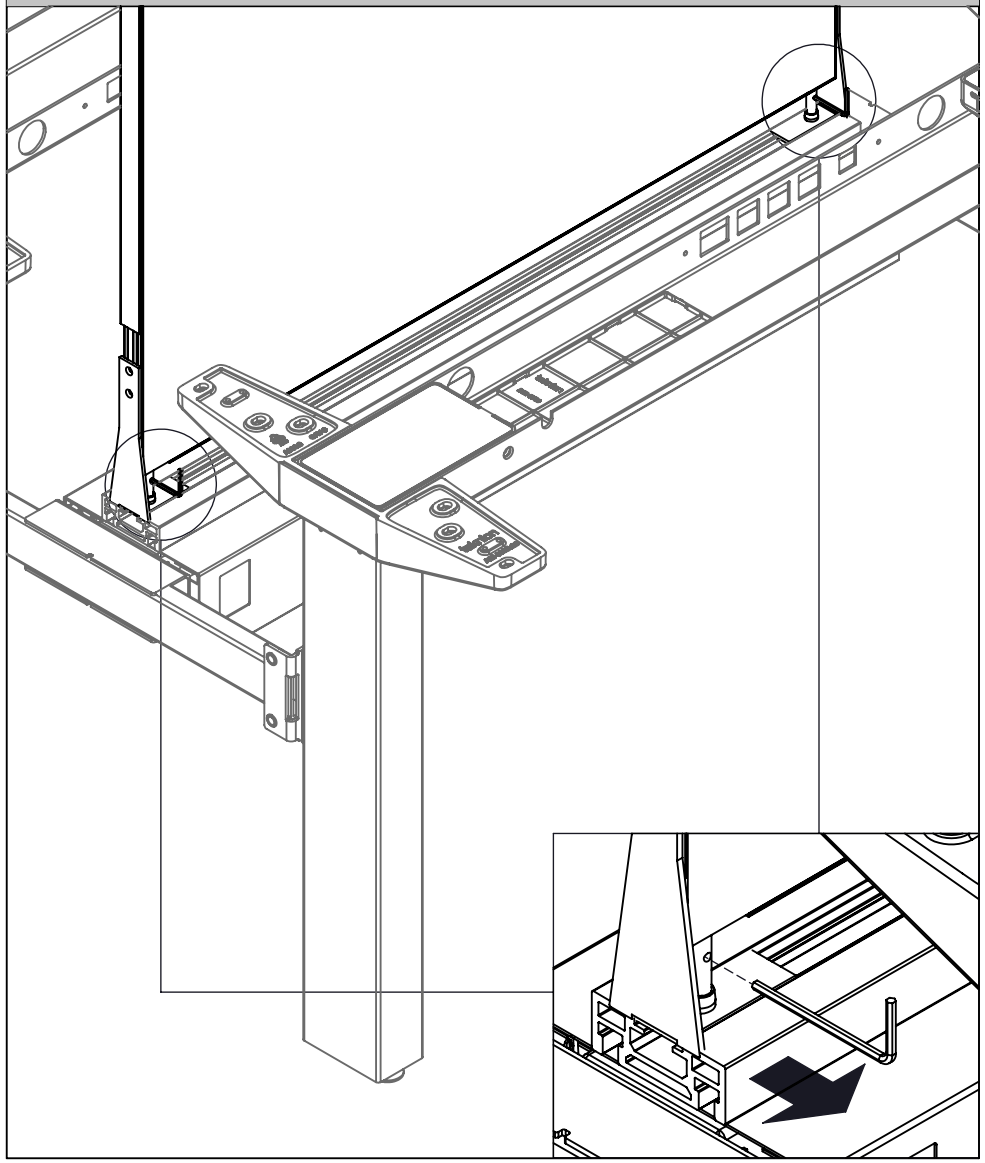

STEP 6: Remove Allen Keys

PRESS DOWN ON SCREEN

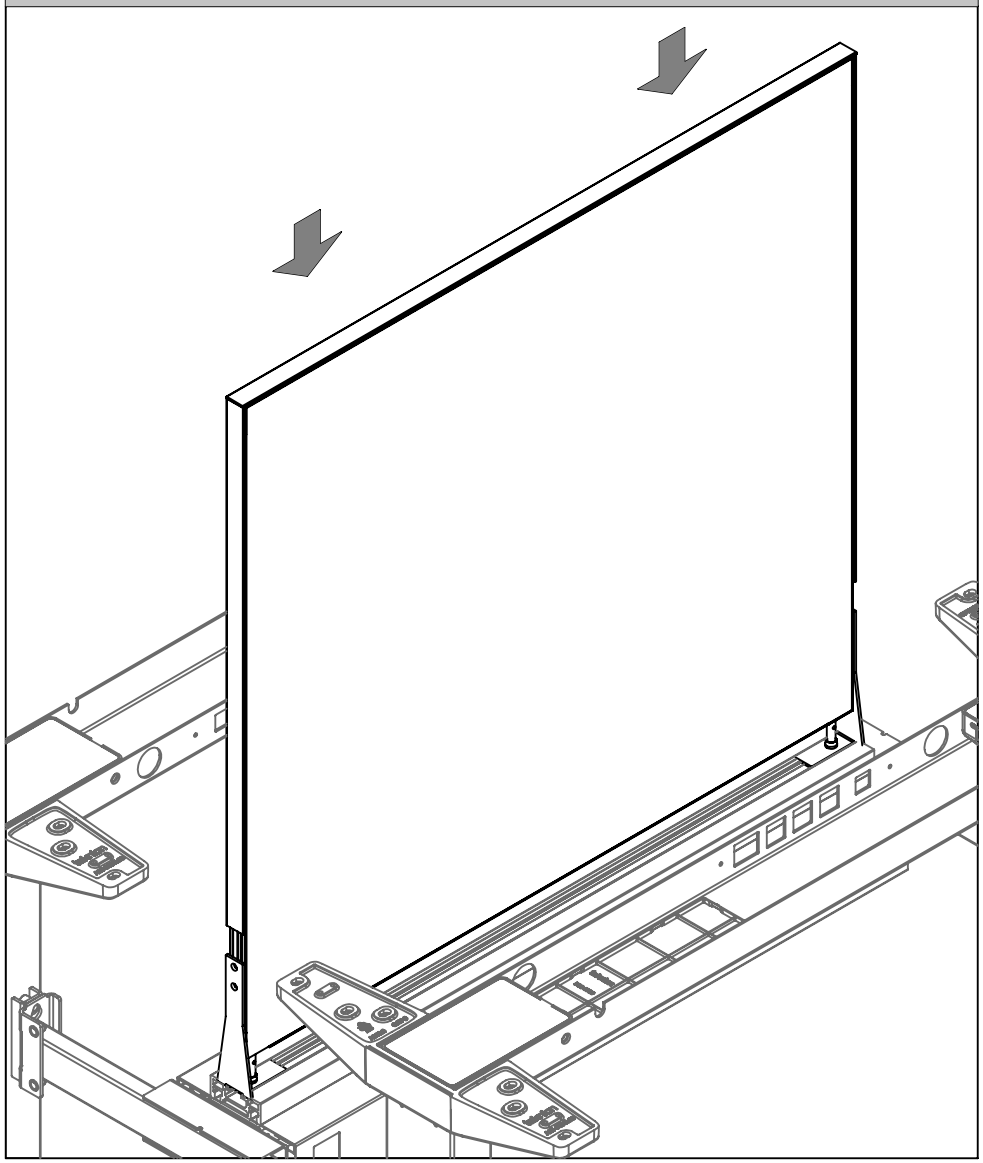

STEP 7: Press Fabric Screen down and make sure Frame is secured with Bushing

SECURE SCREEN

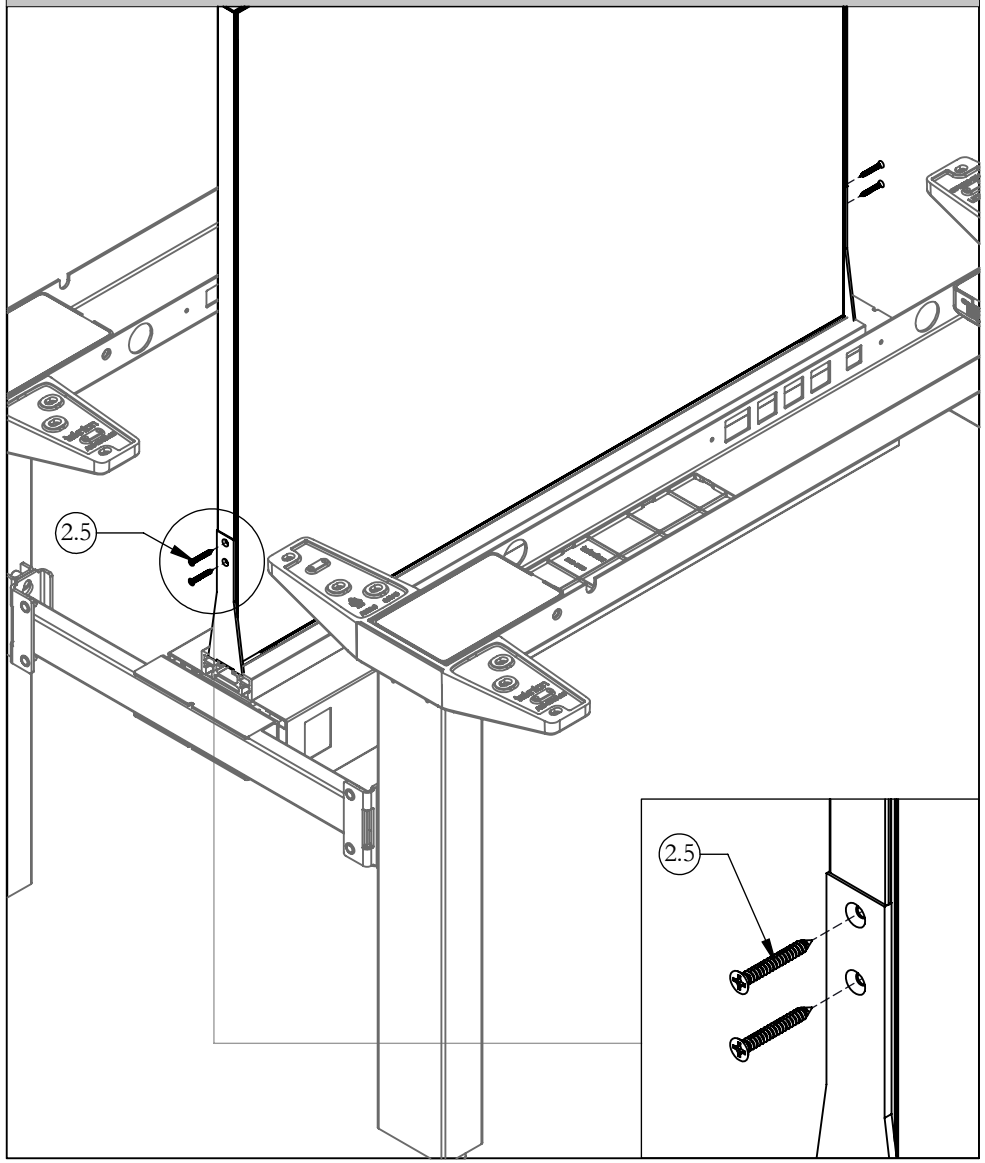

STEP 8: Fasten Support Brackets with Fabric Screen with Screws provided

Navigate End Gable - Metal (HNBCGEMN), Navigate Mid Gable - Metal (HNBCGMMN), Navigate Cable Channel (HNBFCN)

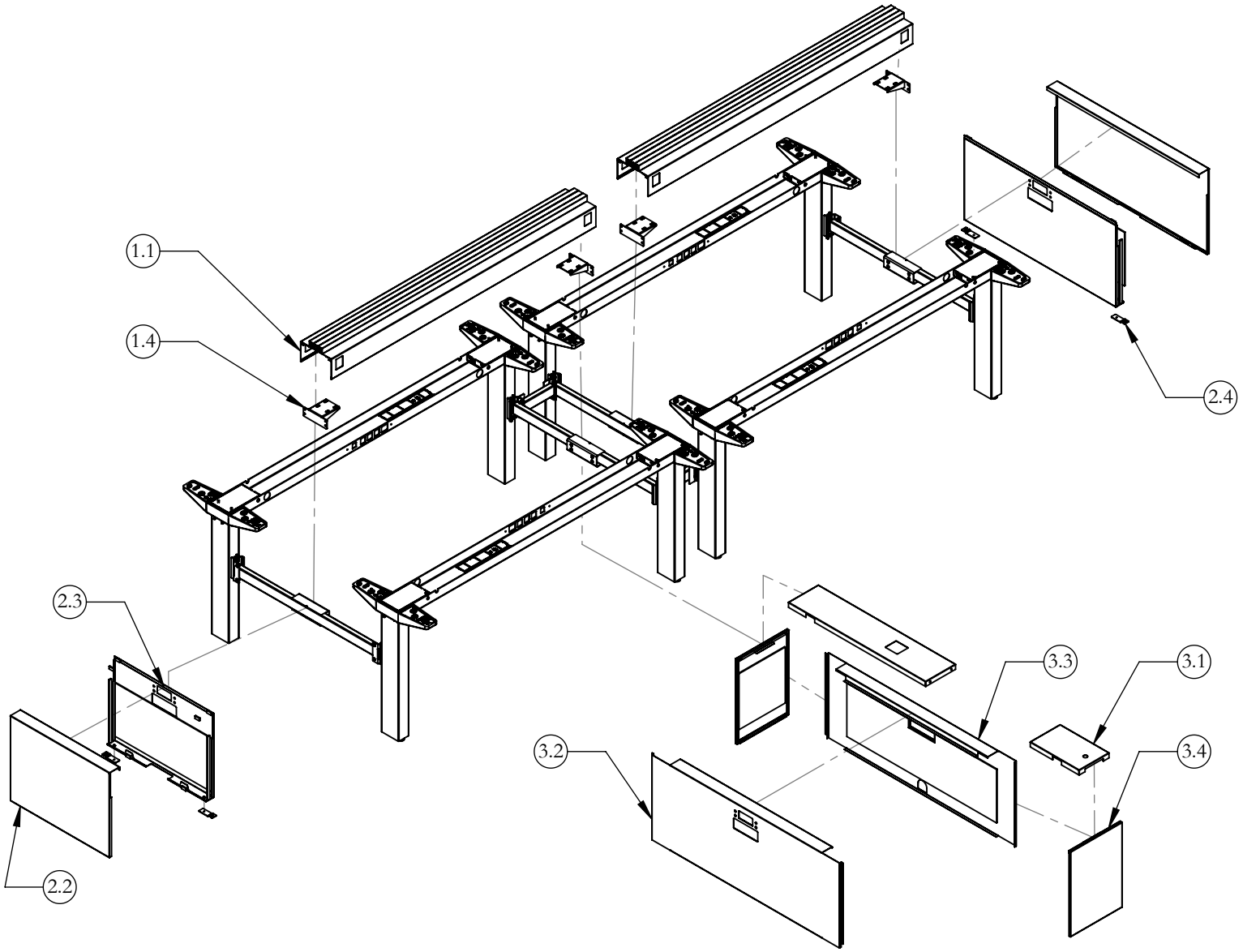

Part & Product Identification

ITEM NO.	PREVIEW	DESCRIPTION	PART NUMBER	QTY.
1. NAVIGATE WIRE CHANNEL (HNBFCN) X1				
1.1	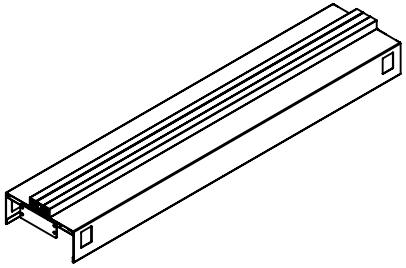	CABLE CHANNEL ASSY - DOUBLE SIDED	HNBFCNB	1
1.2	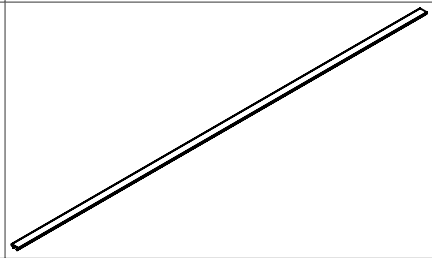	CENTER RAIL EXTRUSION CAP CUT LENGTH	A23-5200-X	1
1.3	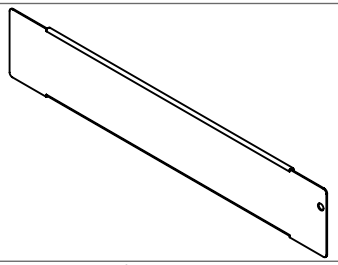	ACCESS DOOR NAVIGATE WIRE CHANNEL	A16-7374	2
1.4	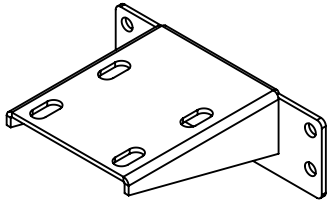	SUPPORT BRKT - SCREEN RAIL	A16-3009	2
1.5	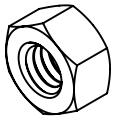	5/16-18 HEX NUT, 1/2 A/F, .265 THK.	E01-0755	8

ITEM NO.	PREVIEW	DESCRIPTION	PART NUMBER	QTY.
1.6	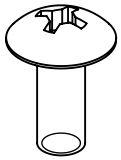	1/4-20X5/8" MACH SCR, BLACK, QUAD,TRUSS	E01-0113	8
1.7	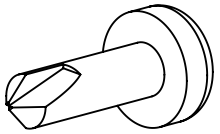	#8-18X1/2"CROSS SQUARE COMB.SELF	E07-0012	12
1.8	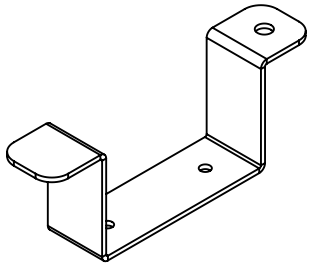	HANGER - CLUB TALK	A16-2364	2
1.9	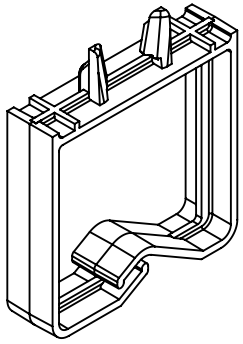	WIRE MANAGER CLIP	B02-2007	16

Part & Product Identification

ITEM NO.	PREVIEW	DESCRIPTION	PART NUMBER	QTY
2. NAVIGATE END GABLE - METAL (HNBCGEMN) X2				
2.1	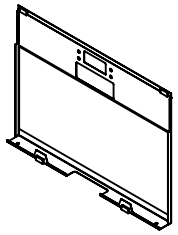	INSIDE COVER ASSY FOR METAL END GABLE DOUBLE SIDED, HAB	N09-8810-X	1
2.2	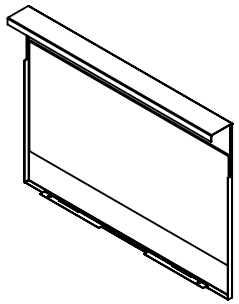	INSIDE COVER FOR METAL END GABLE DOUBLE SIDED, HAB	A16-7473-X	1
2.3	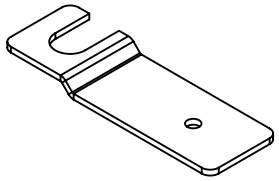	GABLE CONNECTING PLATE	A16-3651	2
2.4	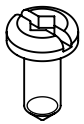	#10X1/2" TAP SCR QUAD PAN	E01-0023	2

ITEM NO.	PREVIEW	DESCRIPTION	PART NUMBER	QTY
3. NAVIGATE MID GABLE - METAL (HNBCGMMN) X1				
3.1	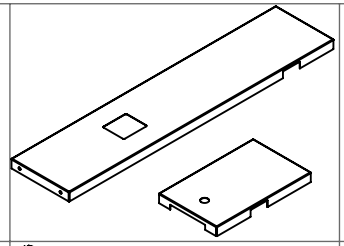	TOP COVER FOR METAL MID GABLE W/ POWER POLE, HAB	A16-3085 & A16-3086	1
3.2	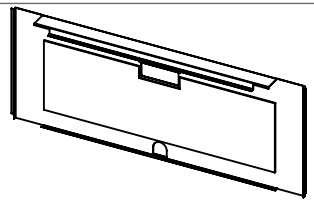	SIDE COVER ASSY W/ CABLE & BASEFEED CUTOUT FOR METAL MID GABLE, HAB	N09-5183-X	1
3.3	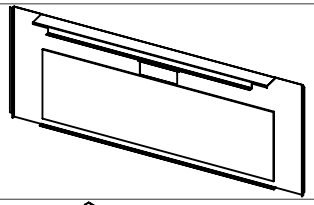	SIDE COVER ASSY W/ CABLE CUTOUT FOR METAL MID GABLE, HAB	N09-5185-X	1
3.4	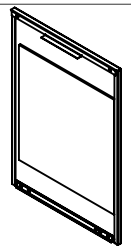	FRONT COVER ASSY FOR METAL MID GABLE, HAB	N09-5182	2
3.5	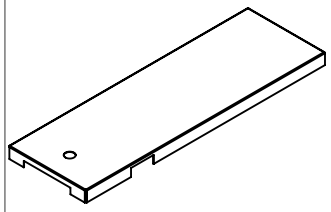	TOP COVER FOR METAL MID GABLE W/ POWER POLE, HAB (OPTIONAL)	A16-3025	2

REMOVE SUPPORT BRACKETS

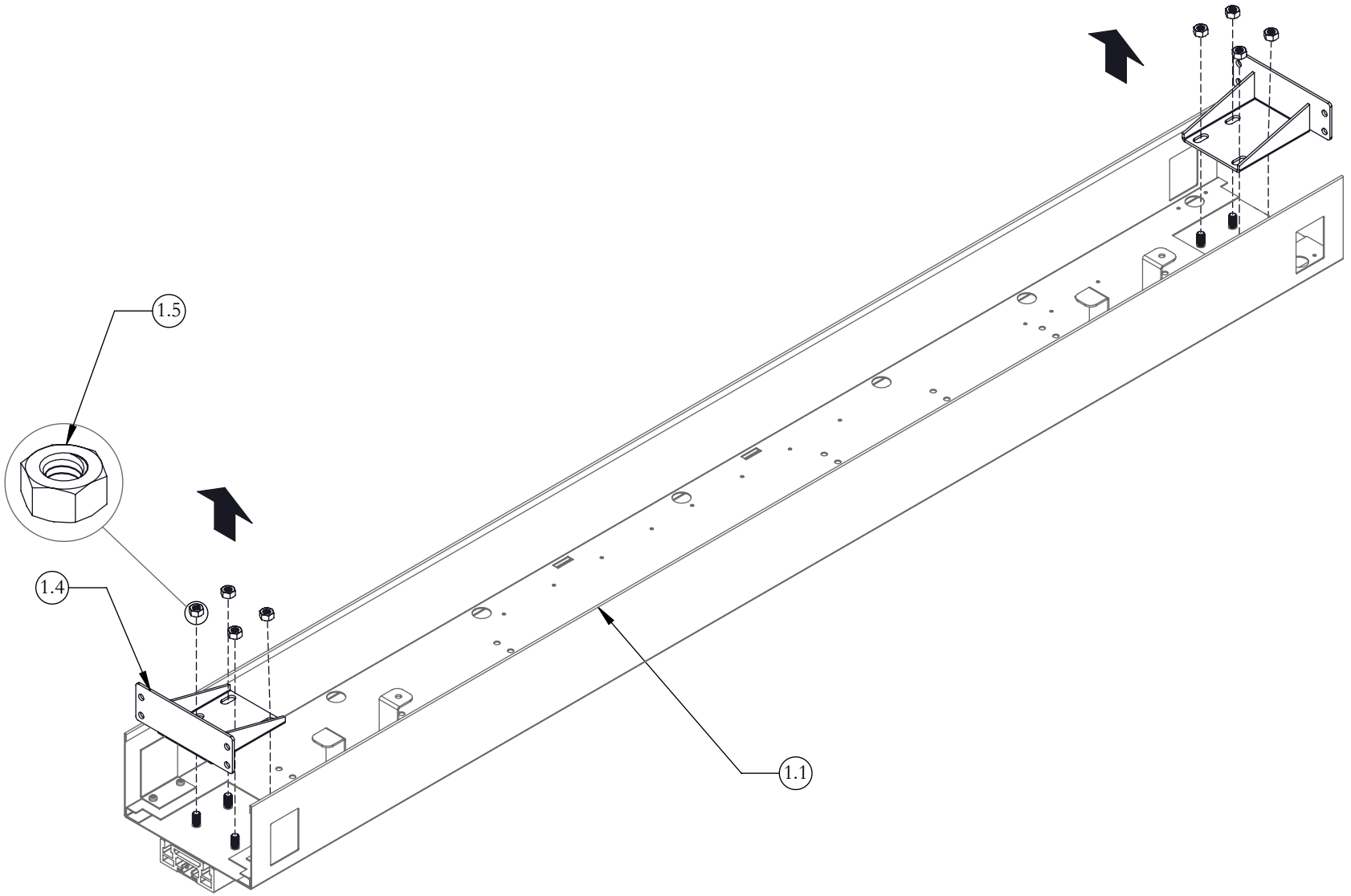

STEP 1: Remove Support Brackets. Make sure the bolts do not come out of the assembly

ATTACH SUPPORT BRACKET

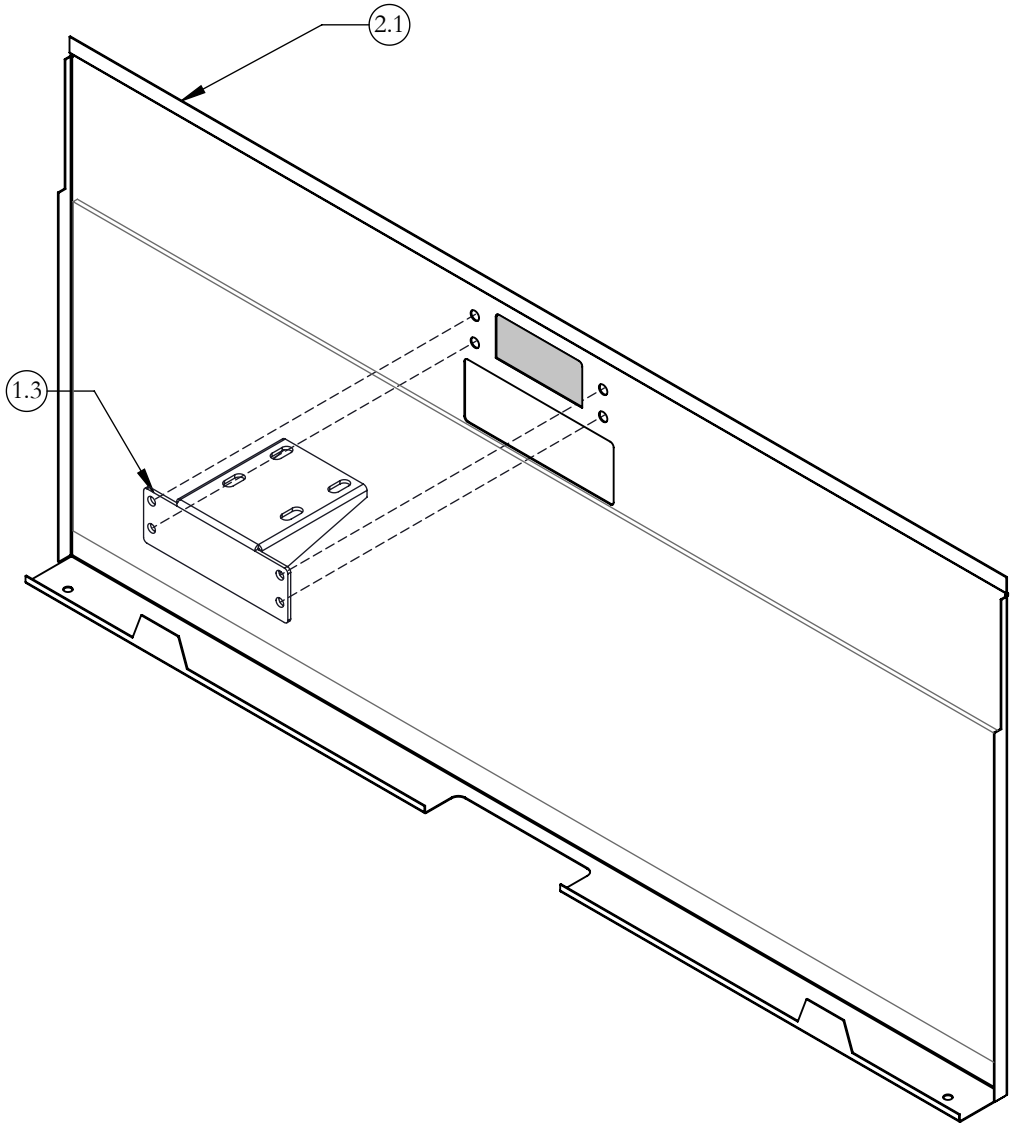

STEP 2: Insert Support Bracket through the cut-out on the Inside Cover Assembly as shown

ATTACH CONNECTING PLATES TO FRAME LEGS

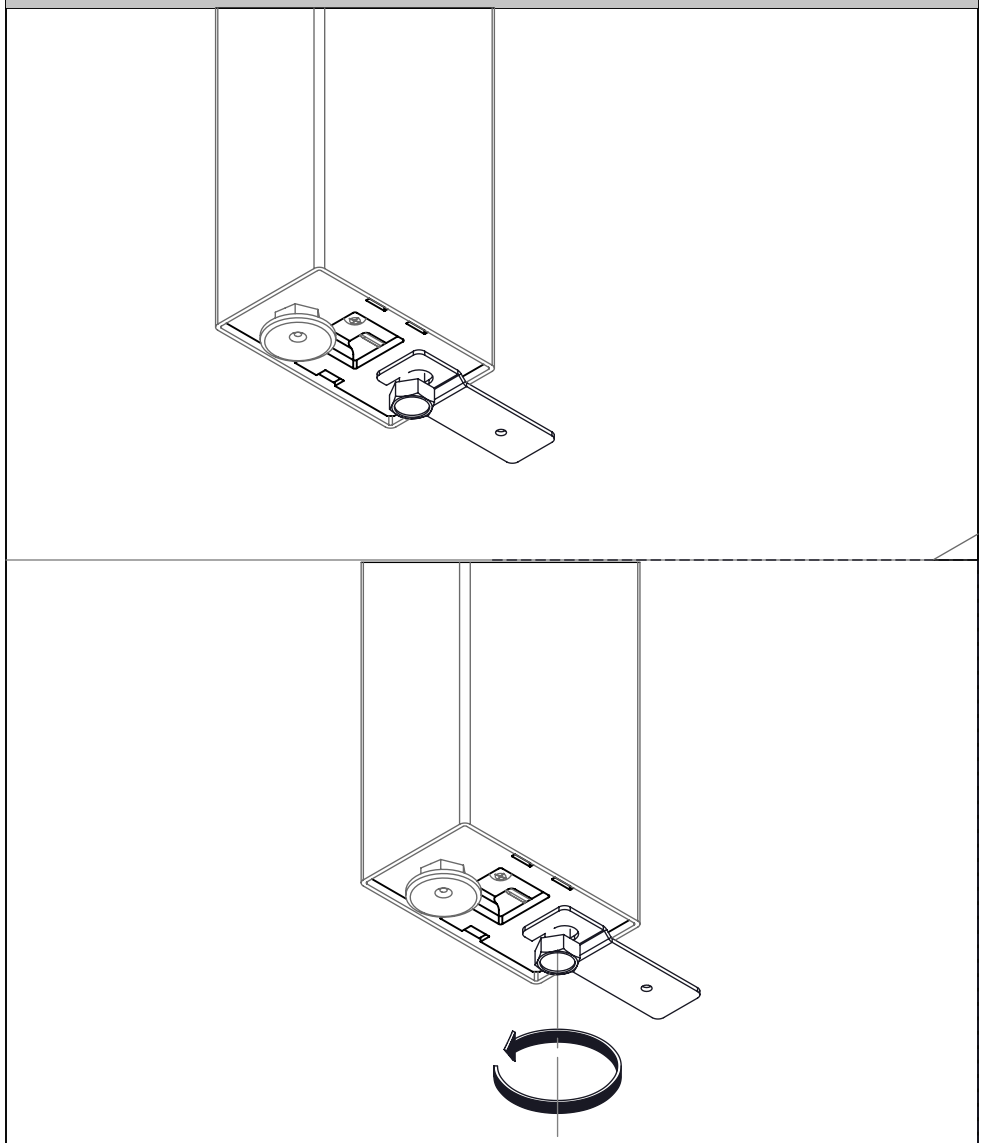

STEP 3 Loosen Legs Hex Bolt on both Legs to allow enough clearance for gable connecting plate. Then Fasten Gable Connecting Plates to Frame Legs.

MOUNT INSIDE COVER

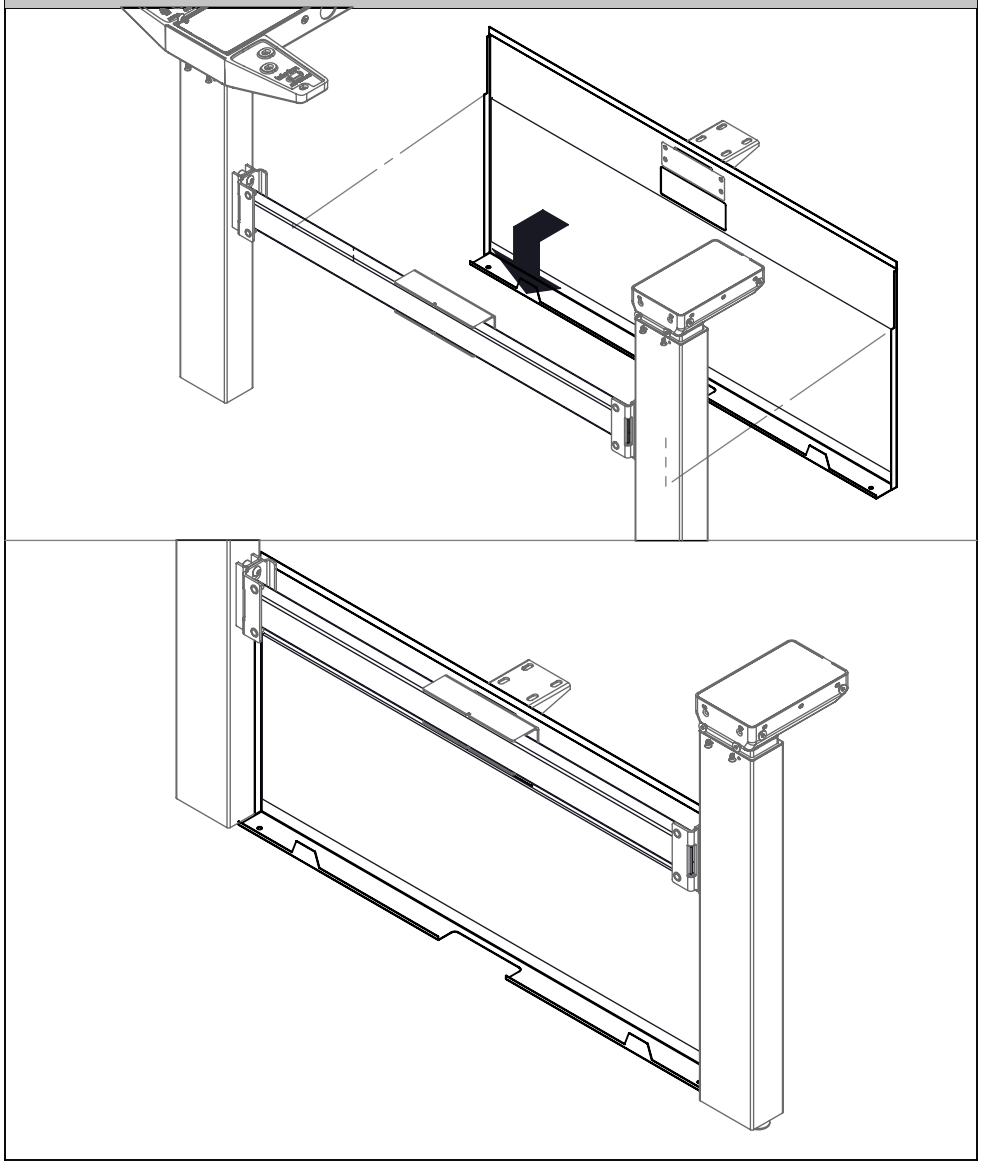

STEP 4: Mount Inside Cover Assembly onto Frame Stretcher Bar (parts of the frame are hidden for illustration purpose)

FASTEN INSIDE COVER IN PLACE

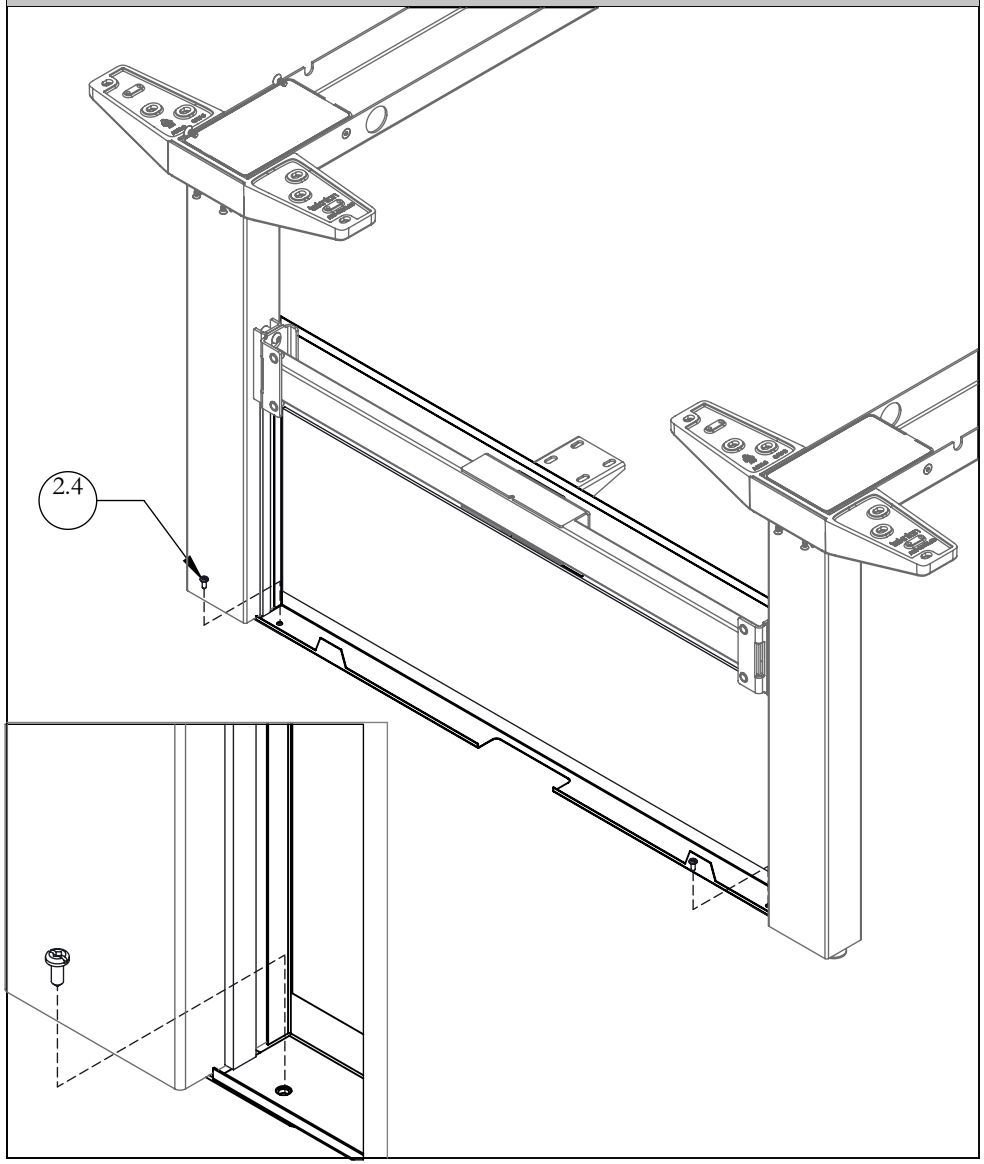

STEP 5: Make sure the face of the Inside Cover Assembly is flush with the Leg. Secure Inside Cover Assembly to Gable Connecting Plate on both sides using Tap Quad Pan screws provided.

SECURE INSIDE COVER ASSEMBLY TO FRAME

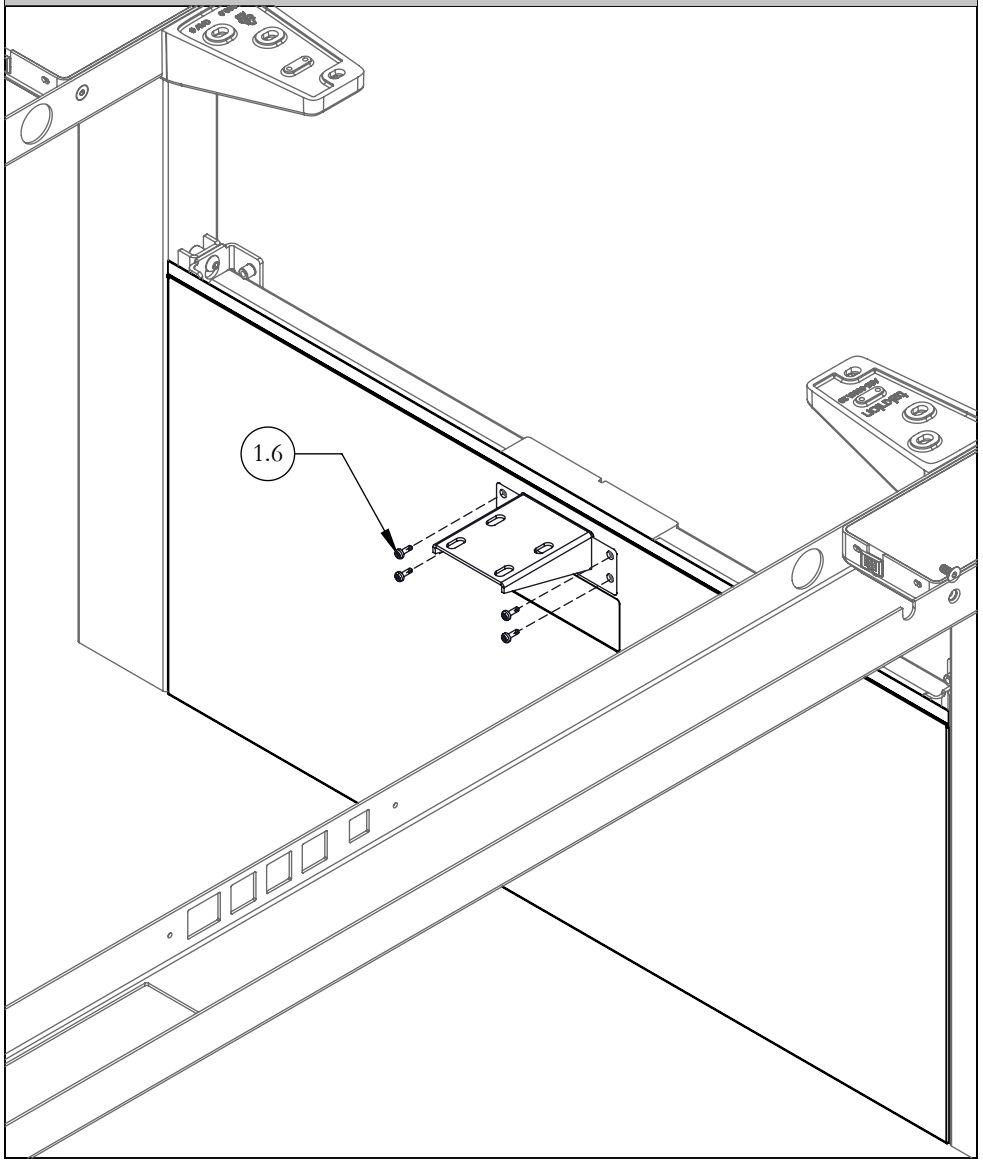

STEP 6: Secure Inside Cover Assembly to Stretcher Bar with Bolts.

MOUNT OUTSIDE COVER ASSEMBLY

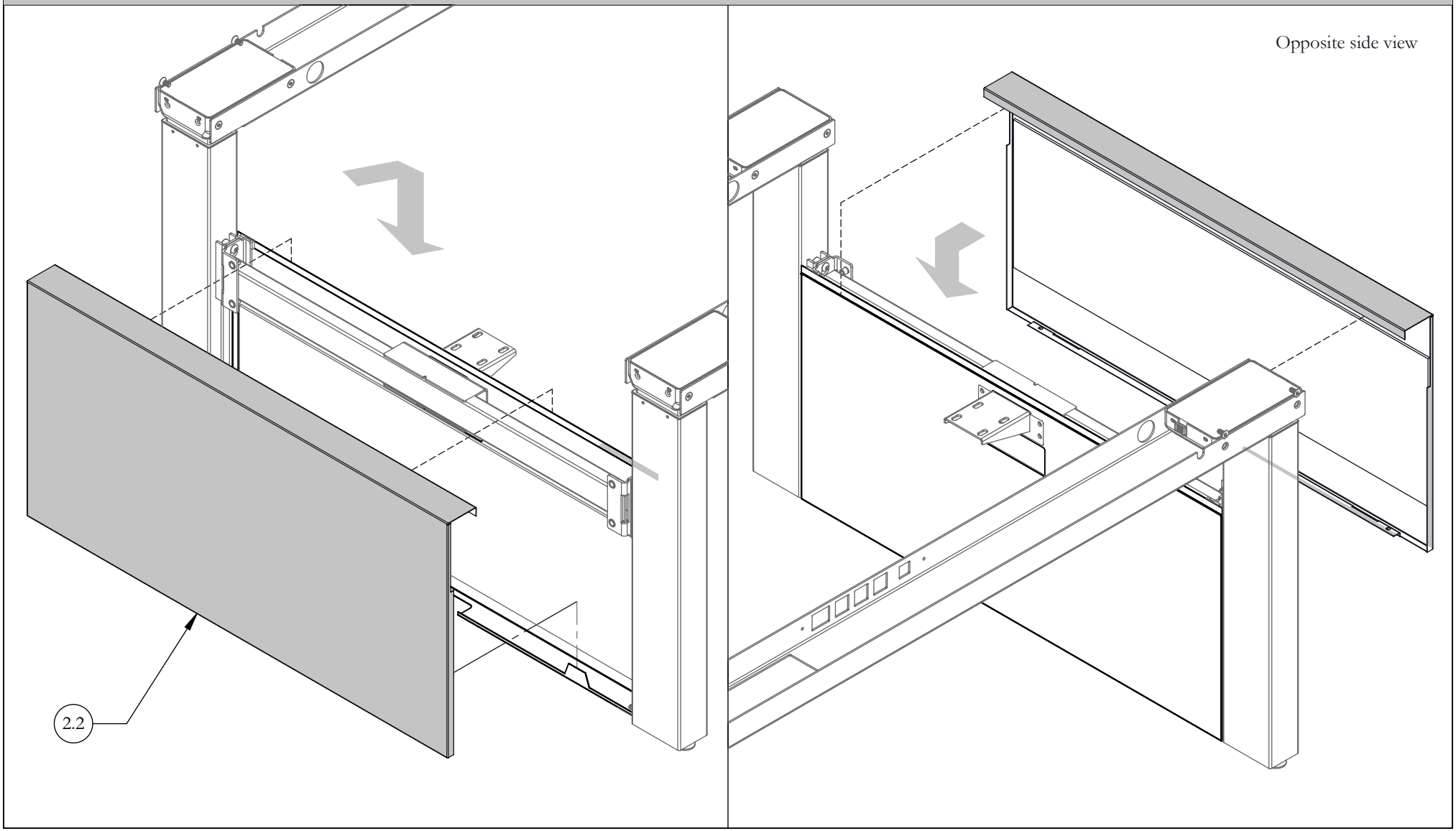

STEP 7:Mount Outside Cover Assembly to the highlighted part of the Inside Cover Assembly as shown.

MID POWER POLE SUPPORT PLATE (OPTIONAL)

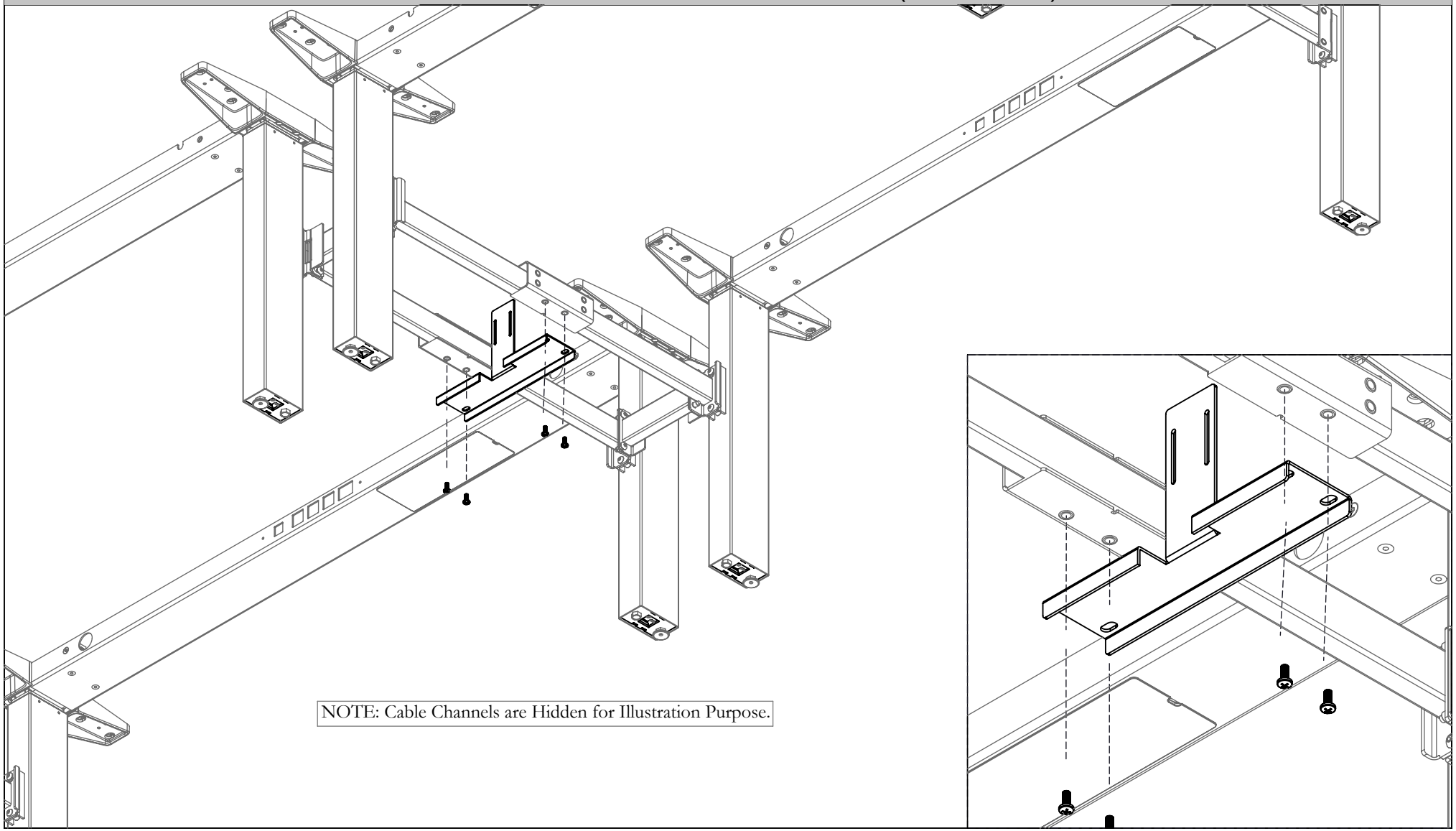

Optional: If Mid Power Pole is specified. Please fasten Connecting Bracket to the underside of the Stretcher Bars as shown.

NOTE: Please refer to installation guide HABN_322b

ATTACH SUPPORT BRACKET

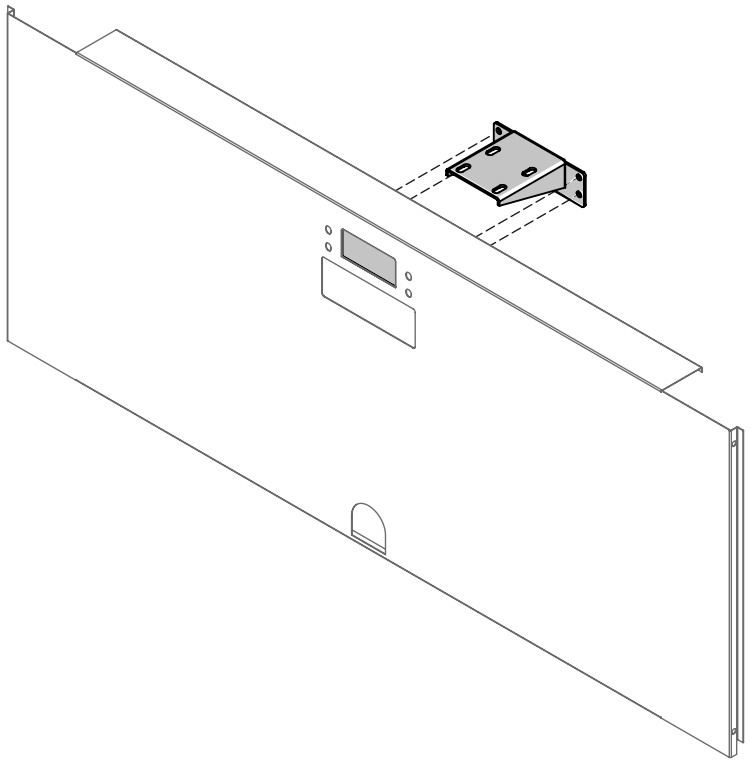

STEP 8: Insert Support Bracket through the cut-out on the Side Cover Assembly

SCREEN AND GABLES

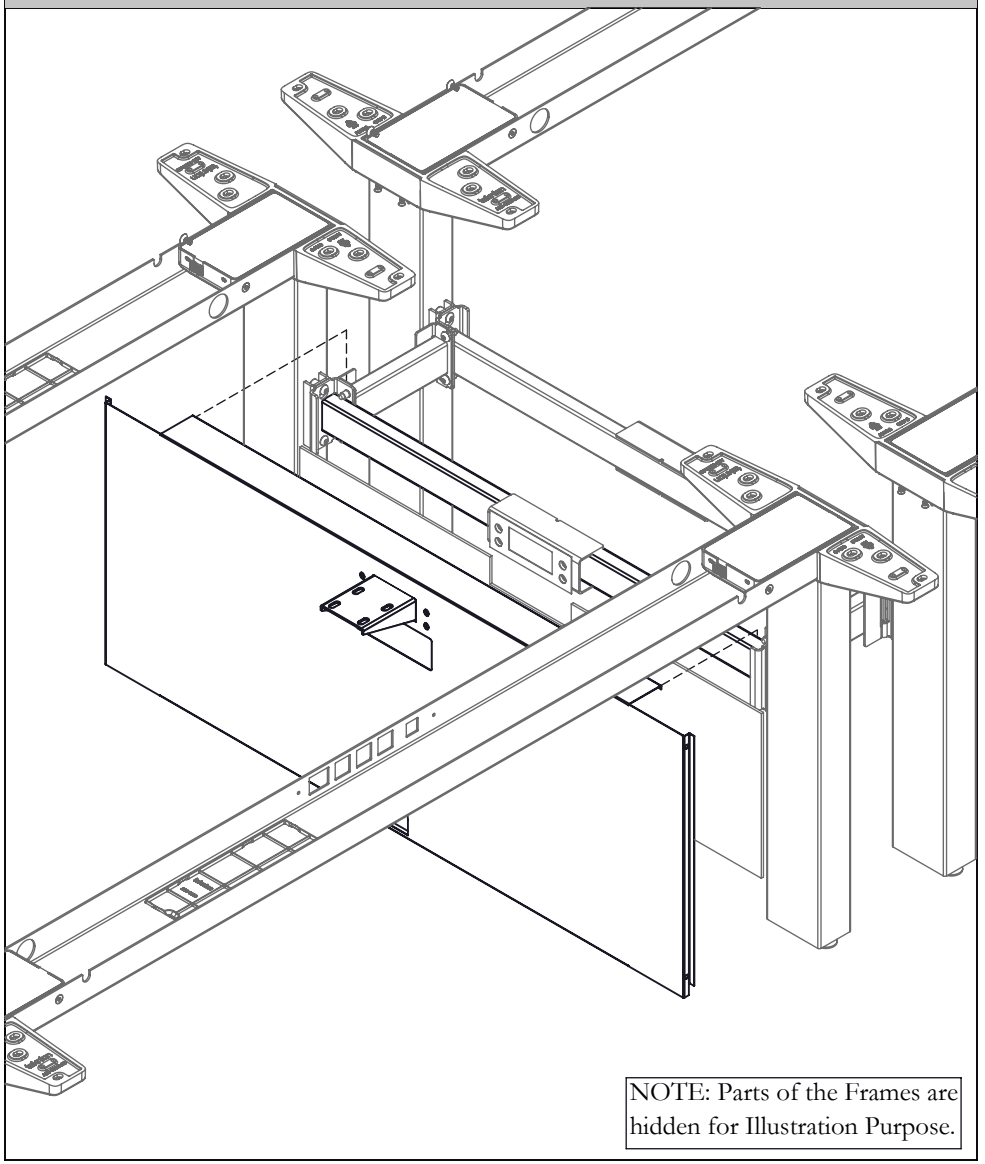

STEP 9: Mount Side Cover Assembly onto the Stretcher Bar as shown

NOTE: Please refer to Specification Drawing to mount the correct Side Cover Assembly

SECURE SIDE COVER ASSEMBLY

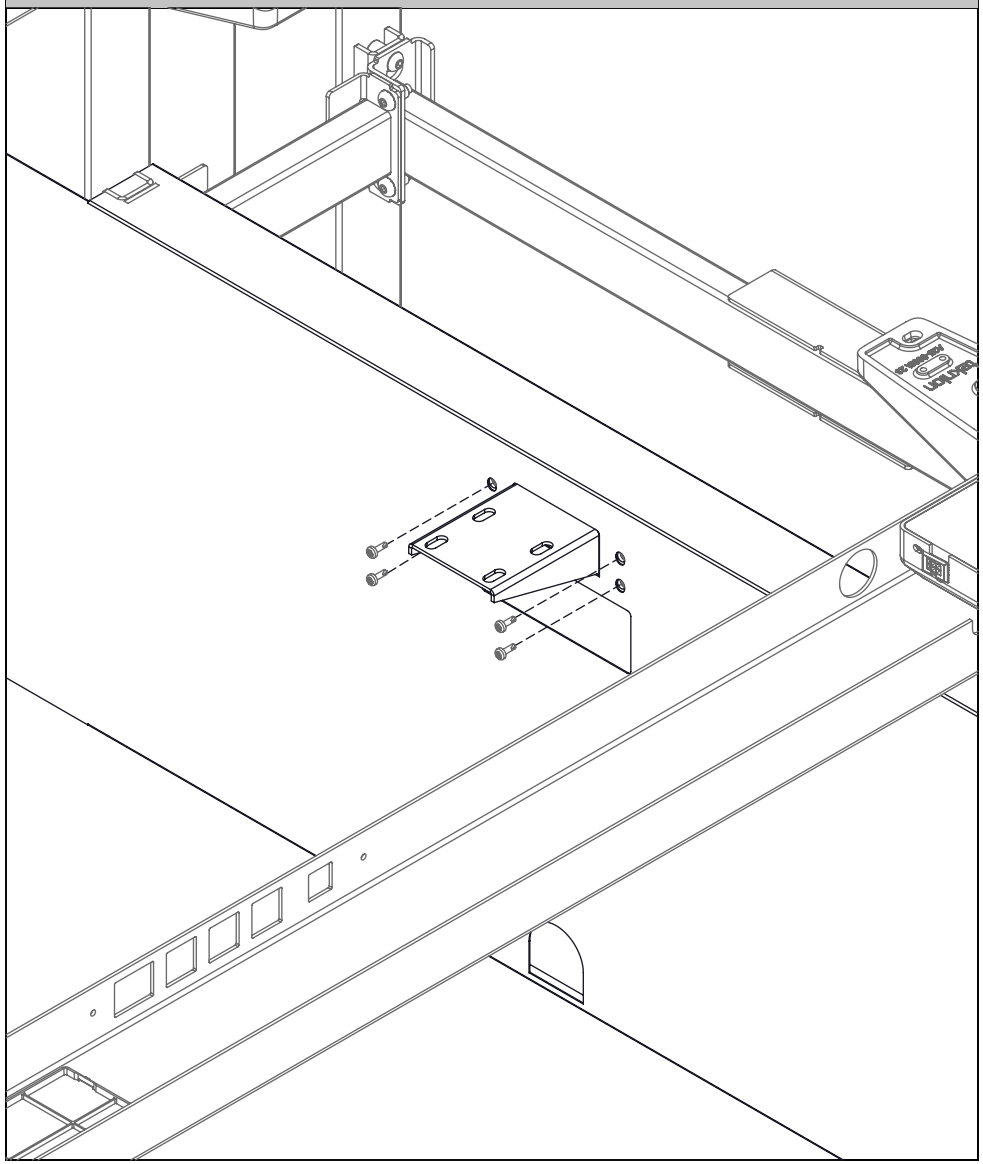

STEP 10: Secure Side Cover Assembly with Stretcher Bar with Screws

CABLE CHANNEL ASSEMBLY

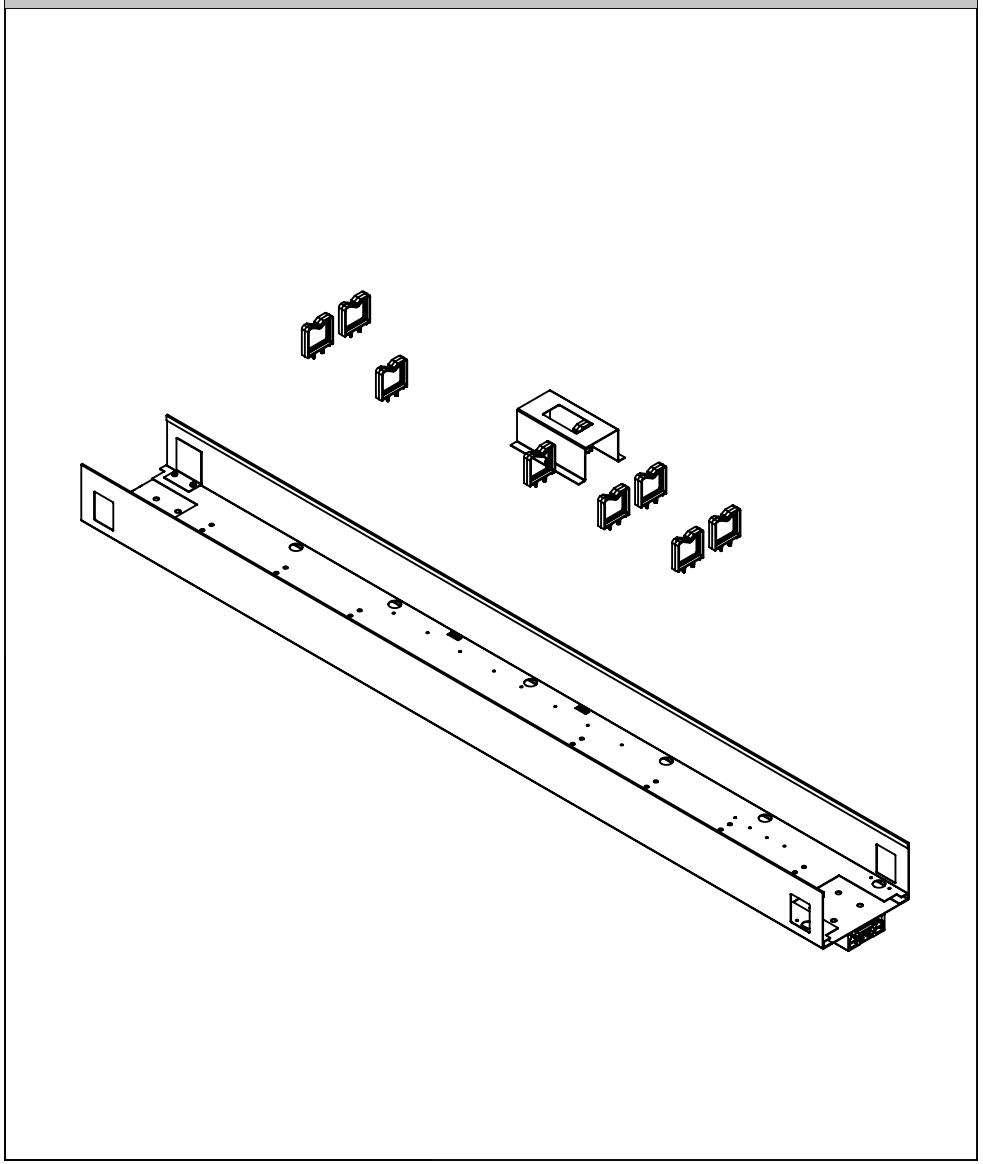

NOTE: Electrics components to be installed on Cable Channel before connecting to Support Bracket. Please refer to Installation Guide 321a, 321b, 321c,322a or 322b for corresponding Electrics installation.

ATTACH CABLE CHANNEL & CENTER RAIL

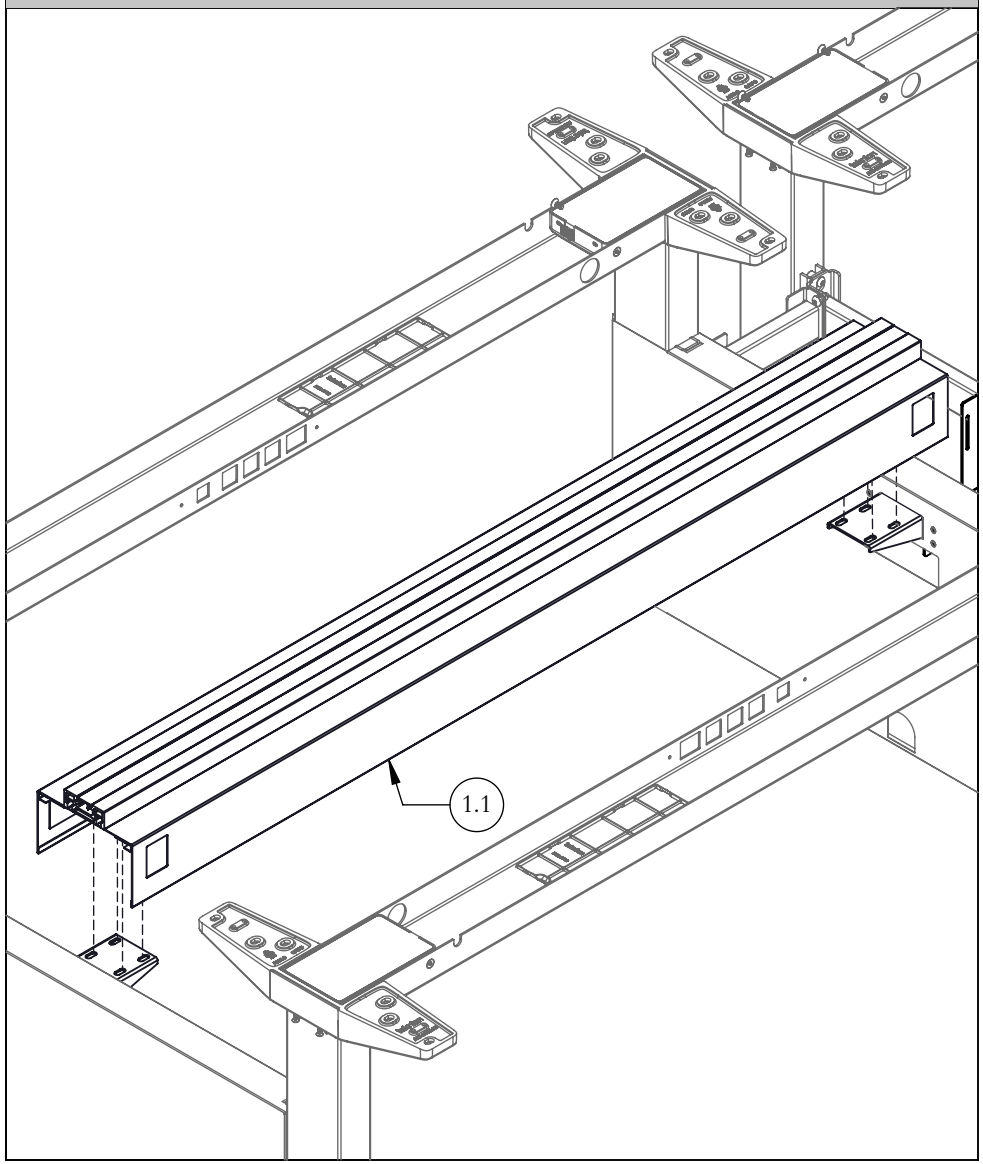

STEP 11: Align holes on Support Brackets, Cable Channel Assembly. Insert Bolts inside Centre Rail Extrusion through Cable Channel Assembly and Brackets as shown

SECURE CABLE CHANNEL

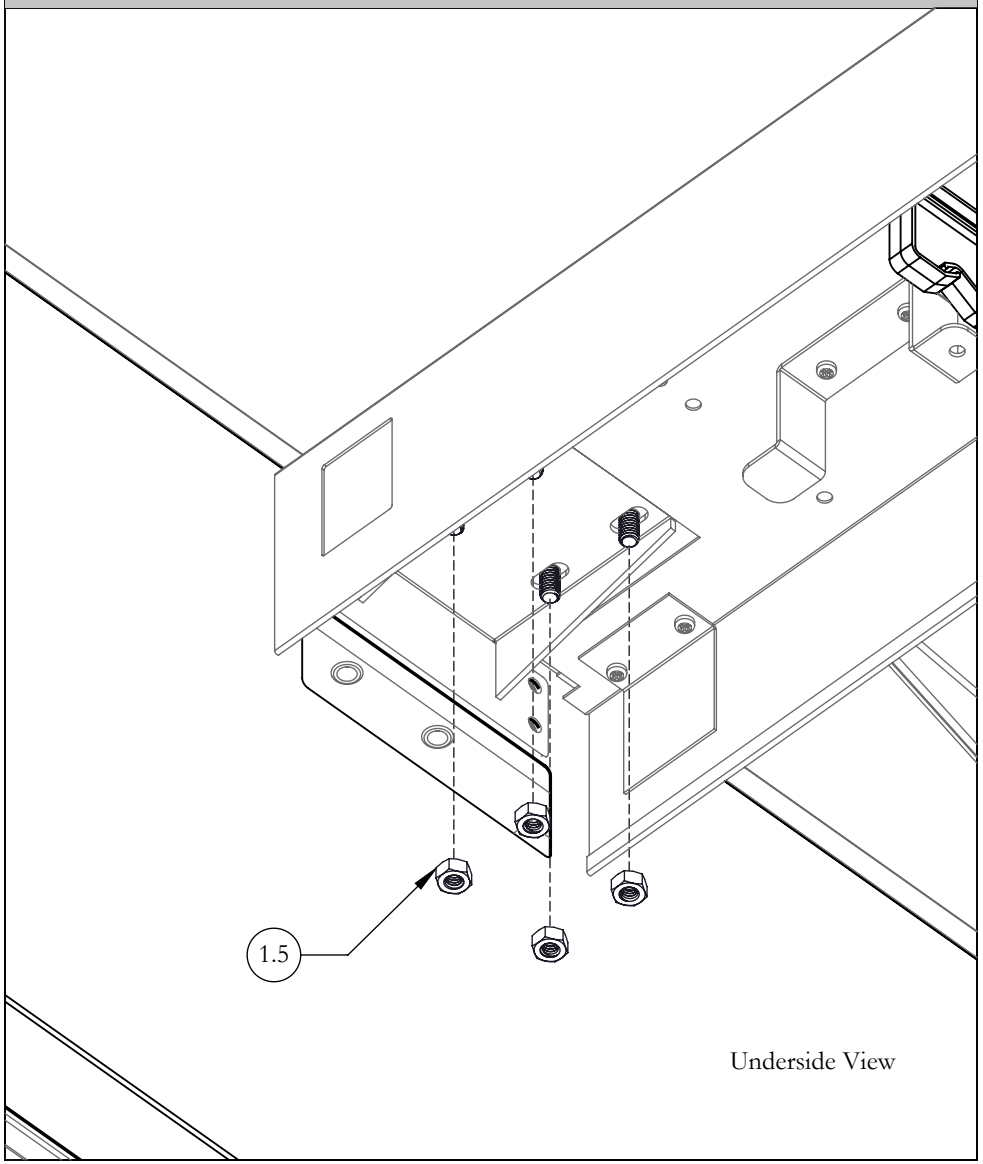

STEP 12: Secure Cable Channel in place with Nuts

ATTACH SUPPORT BRACKET

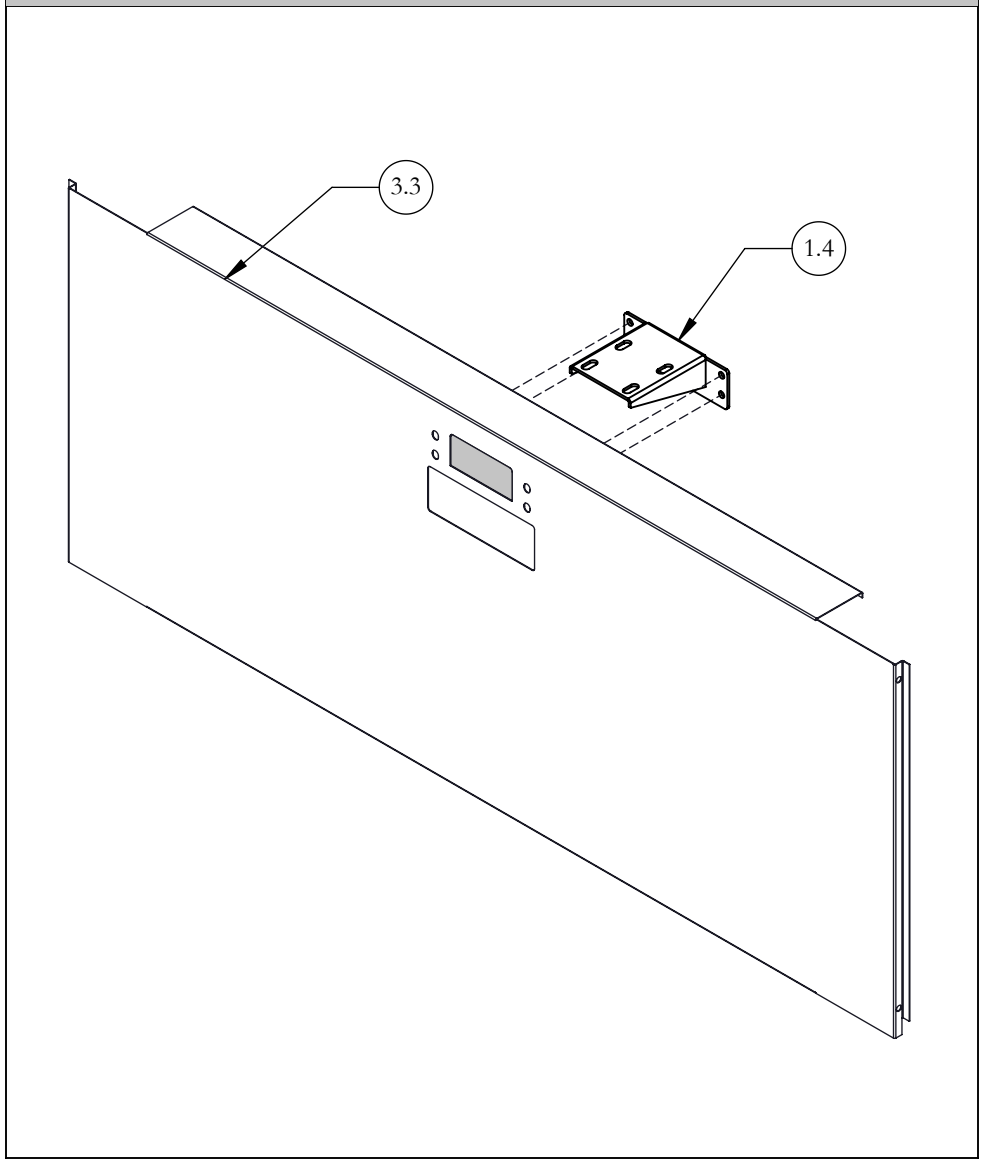

STEP 13: Insert Support Bracket through the cut-out on the Side Cover Assembly

MOUNT SIDE COVER ASSEMBLY

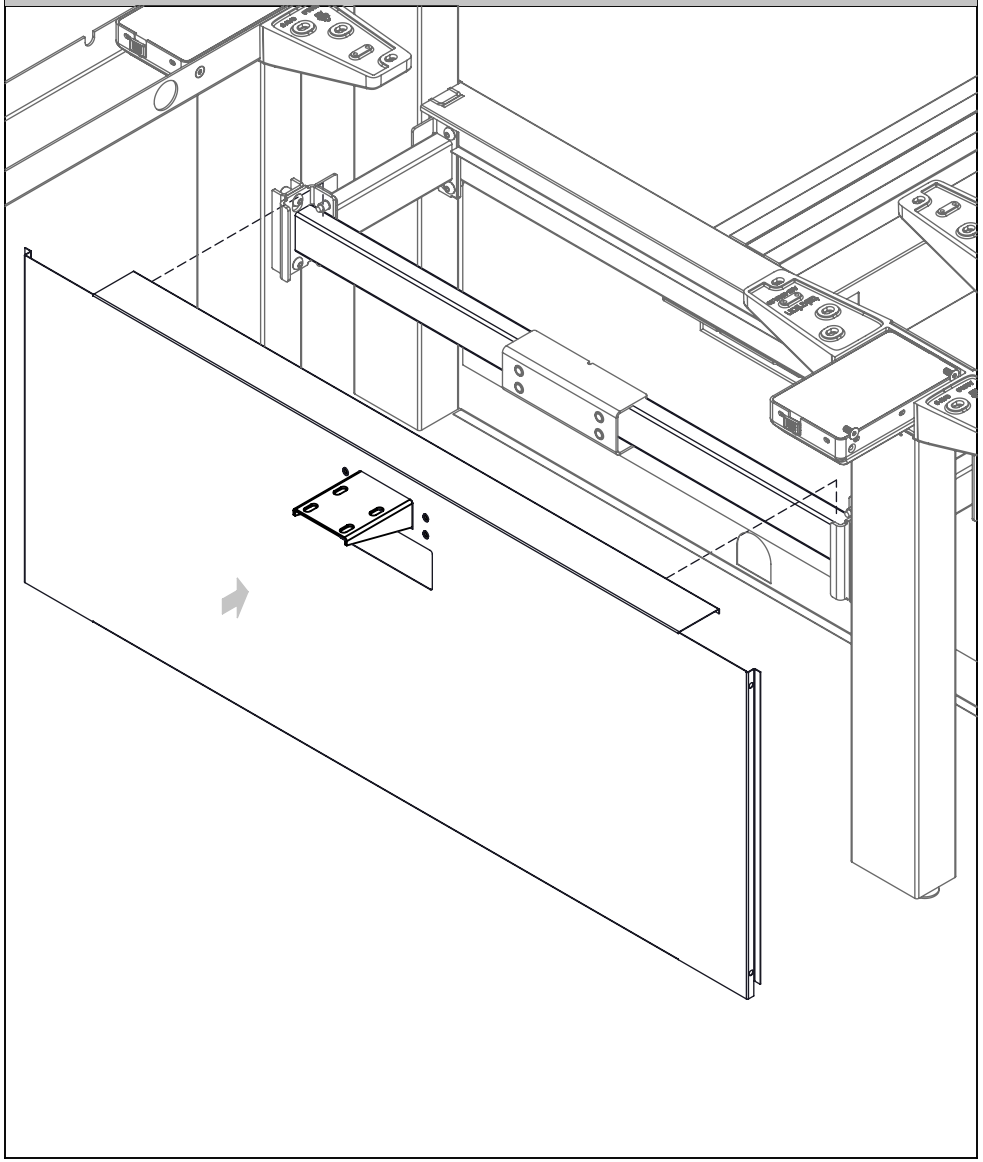

STEP 14: Mount Side Cover Assembly onto the Stretcher Bar as shown

SECURE SIDE COVER ASSEMBLY

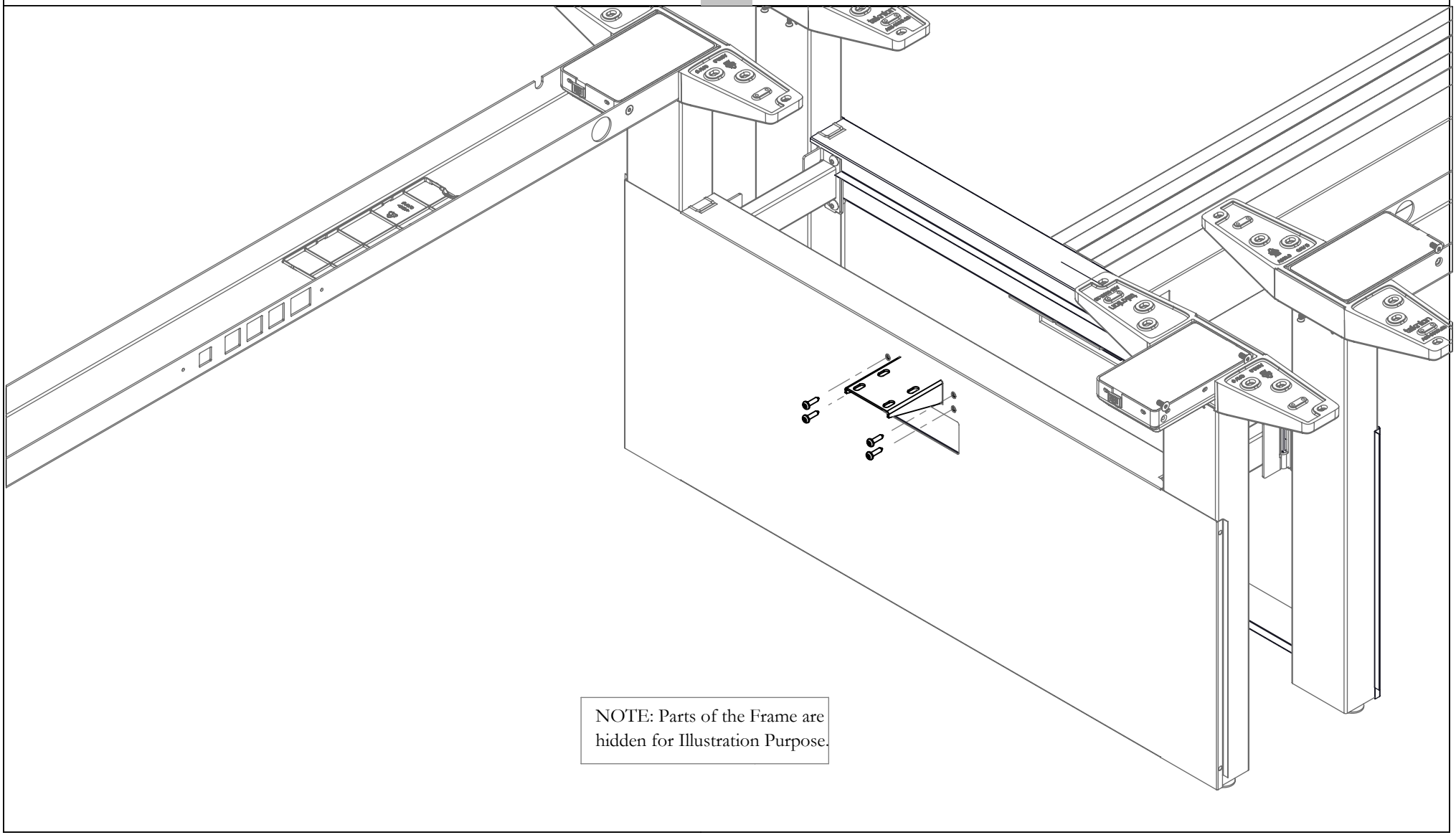

STEP 15: Secure Side Cover Assembly with Stretcher Bar with Bolts.

MOUNT FRONT COVER ASSEMBLIES

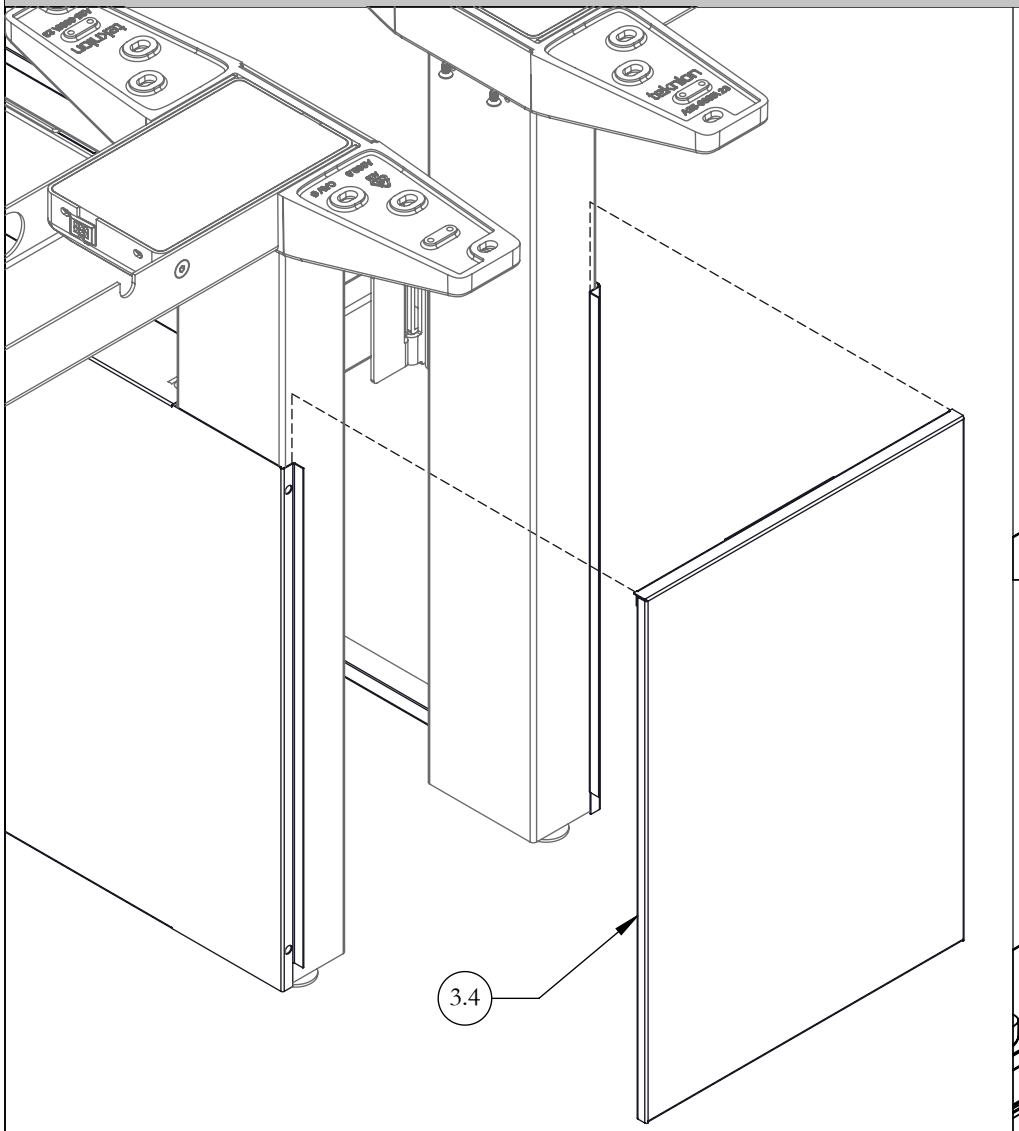

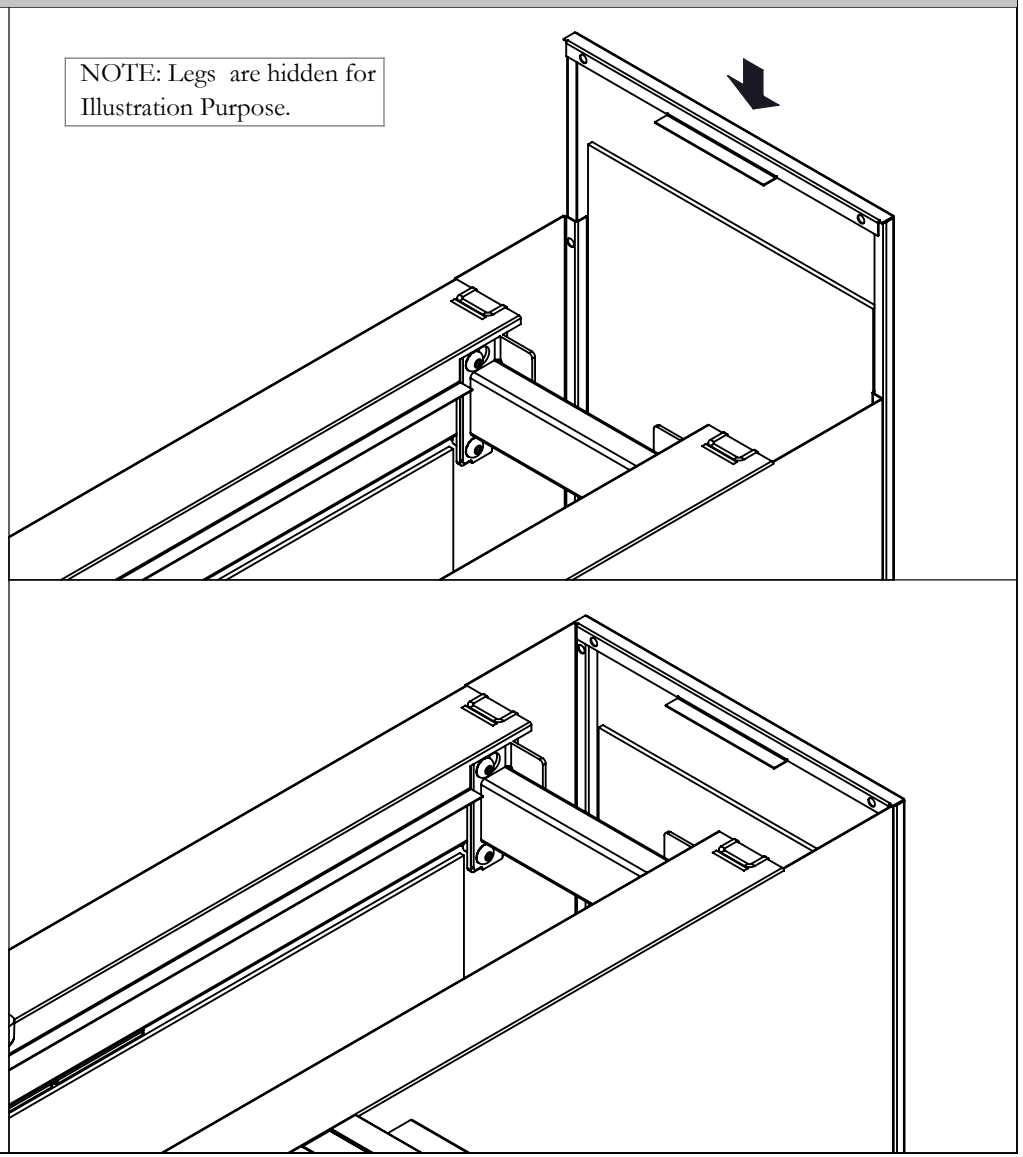

STEP 16: Mount Front Covers onto the Side Covers as shown in Detail View

NOTE: Make sure Magnets remain attached to the legs

CABLE CHANNEL ASSEMBLY

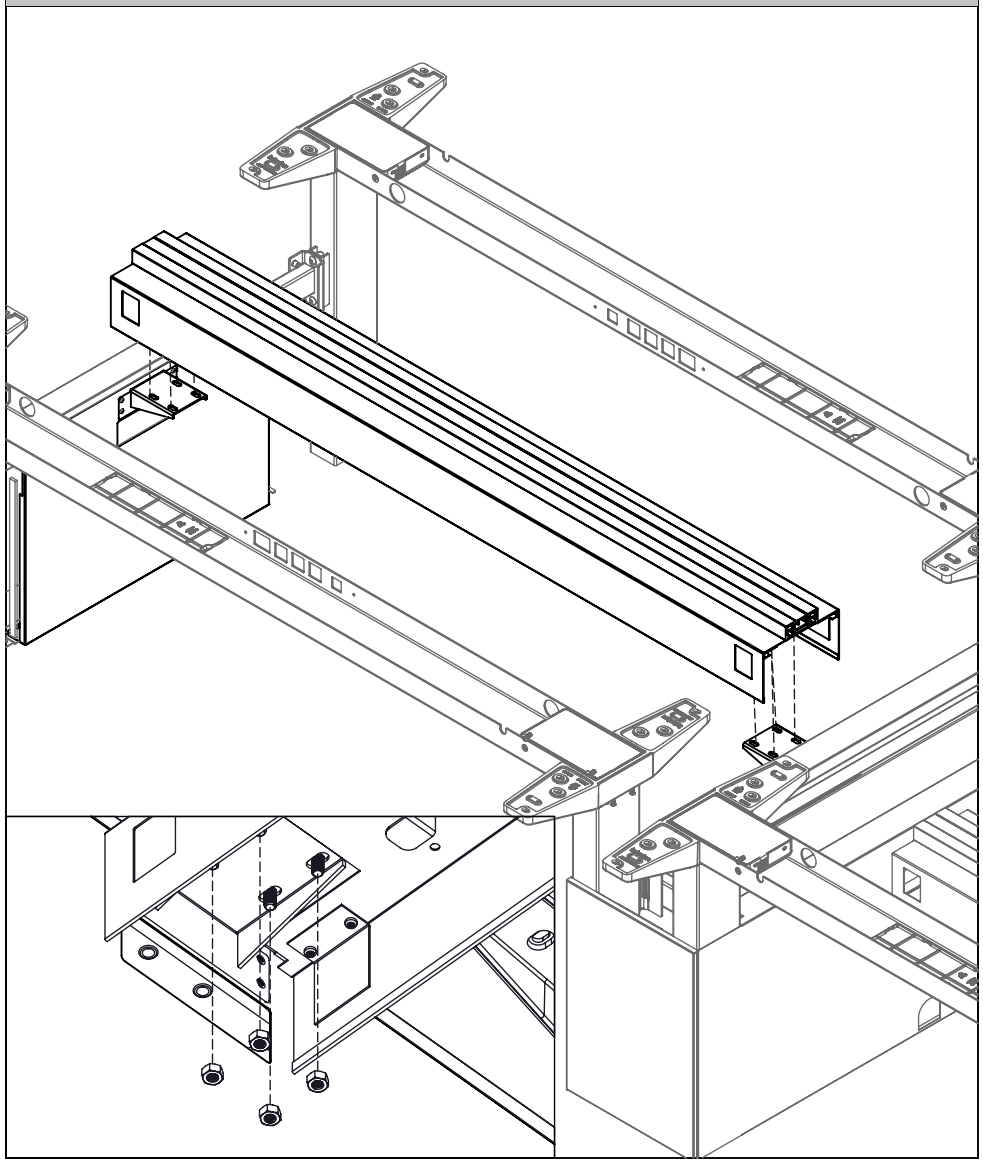

STEP 17: Align holes on Support Brackets, Cable Channel Assembly. Insert Bolts inside Center Rail Extrusion through Cable Channel Assembly and Brackets as shown. Secure Cable Channel in place with Nuts.

ATTACH TOP COVER

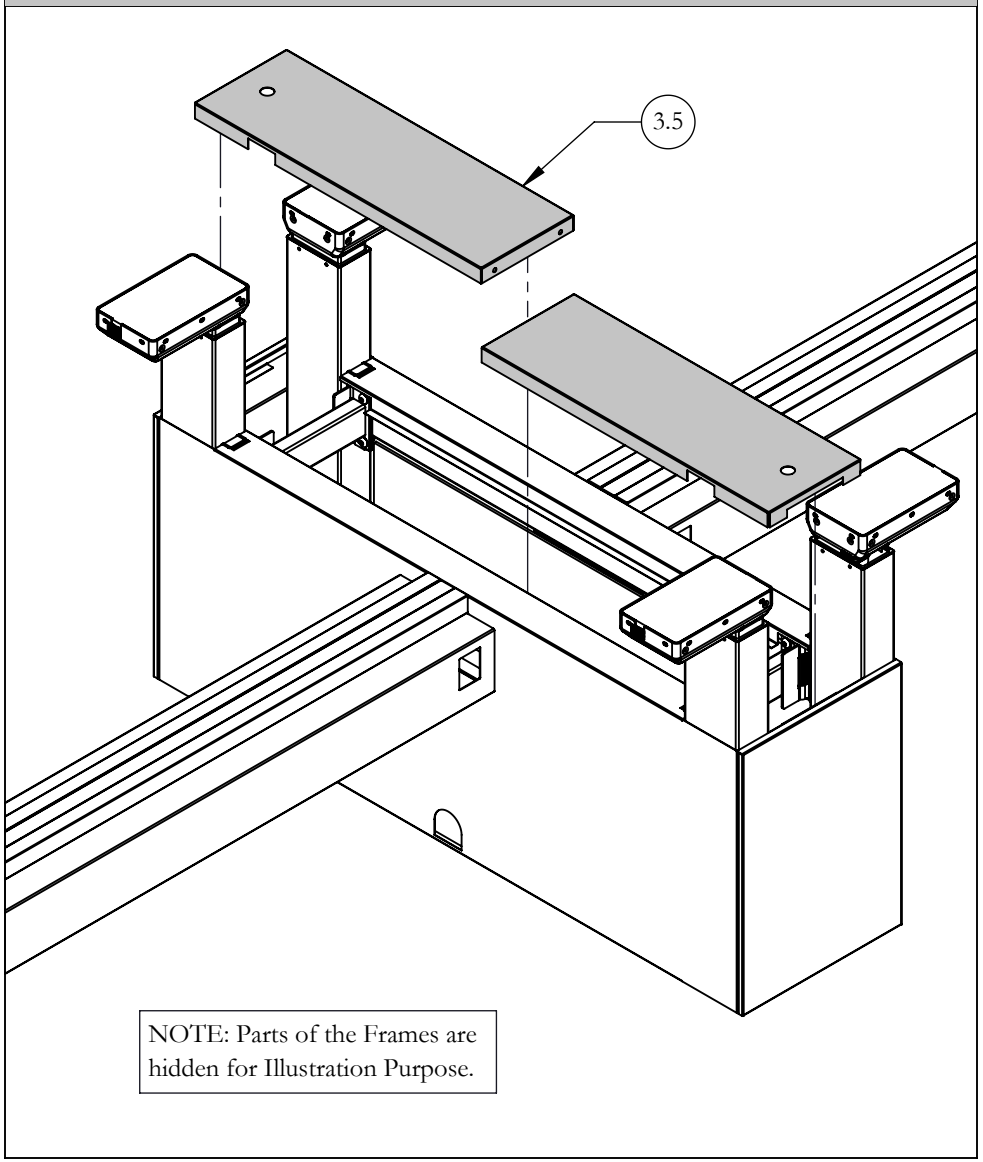

STEP 18: Attach Top Covers onto the highlighted extrusions on the Side and Front Cover Assemblies.

TOP COVER WITH POWER POLE CUTOUT (OPTIONAL)

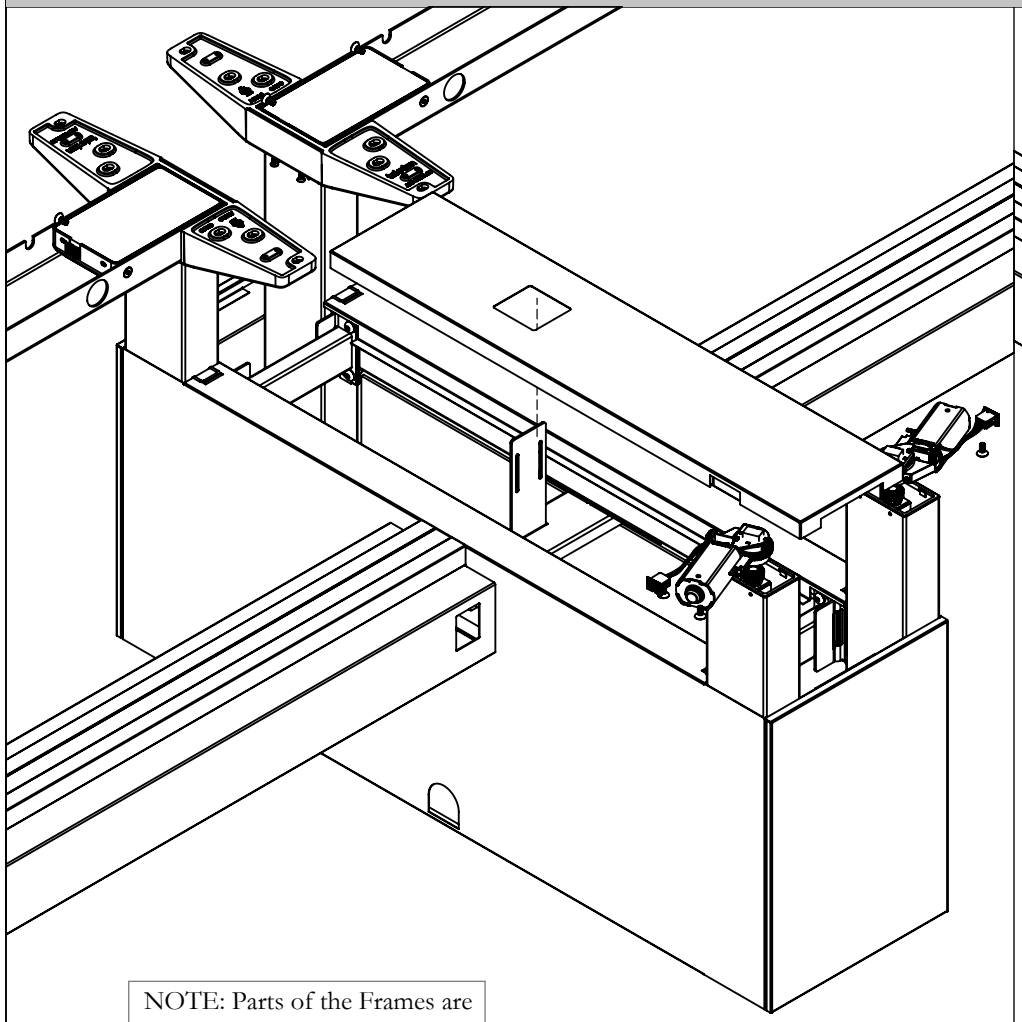

NOTE: Parts of the Frames are hidden for Illustration Purpose.

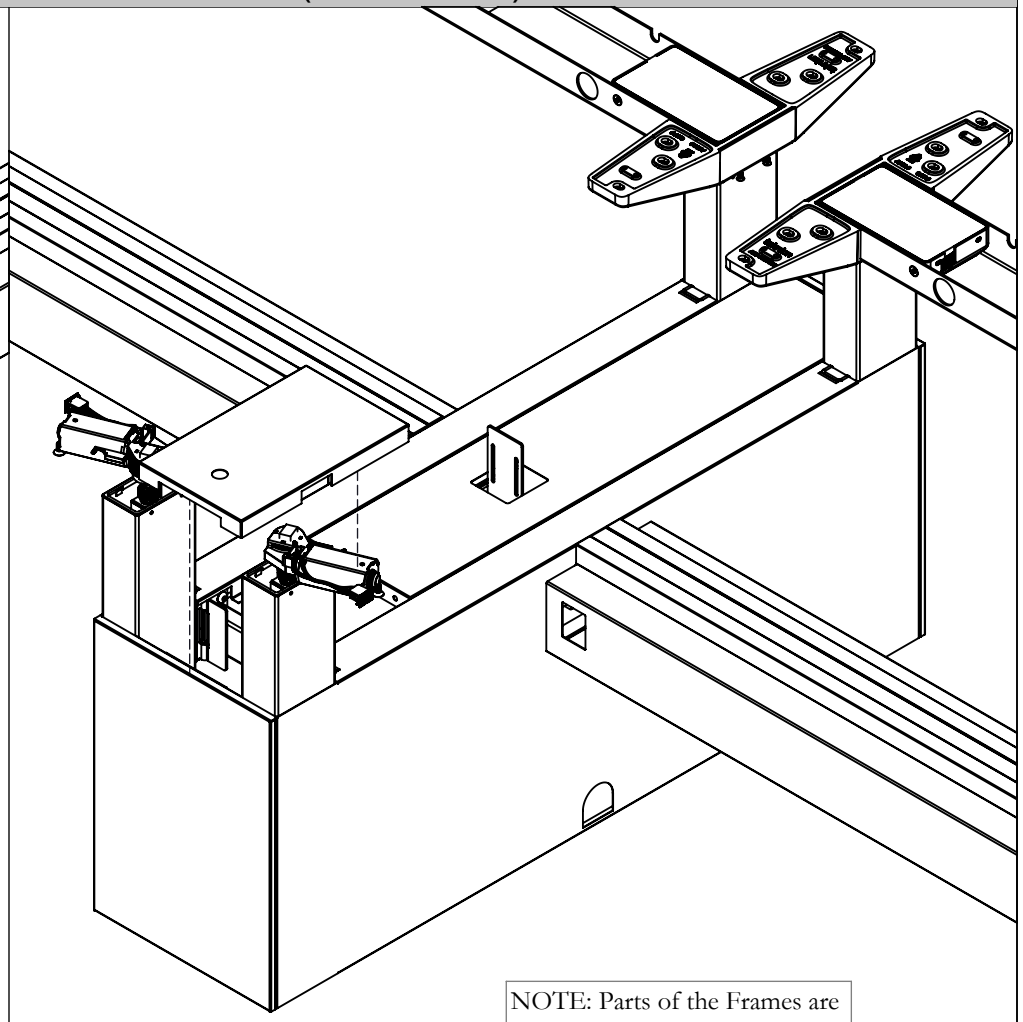

NOTE: Parts of the Frames are hidden for Illustration Purpose.

STEP 19: If Mid gable Power Pole is Specified, attach Top Covers onto the hightlighted extrusions on the Side and Front Cover Assemblies as shown

CENTER RAIL EXTRUSION CAP

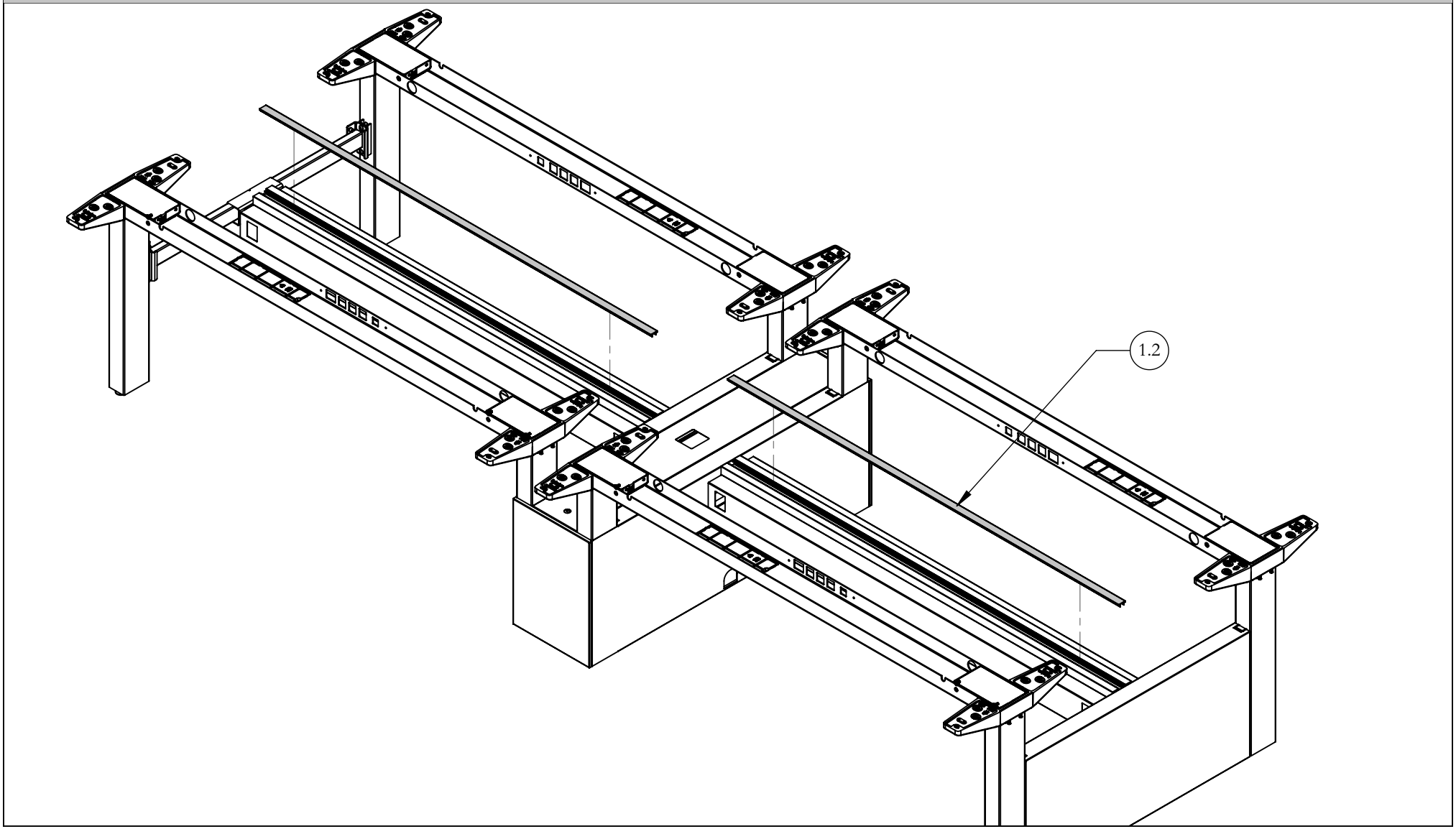

STEP 20: Insert Center Rail Extrusion Caps onto Center Rail Extrusion as shown.

Navigate Mid Gable - Solid (HNBCGMSN), Navigate Cable Channel (HNBFCN), Navigate End Gable - Solid (HNBCGESN)

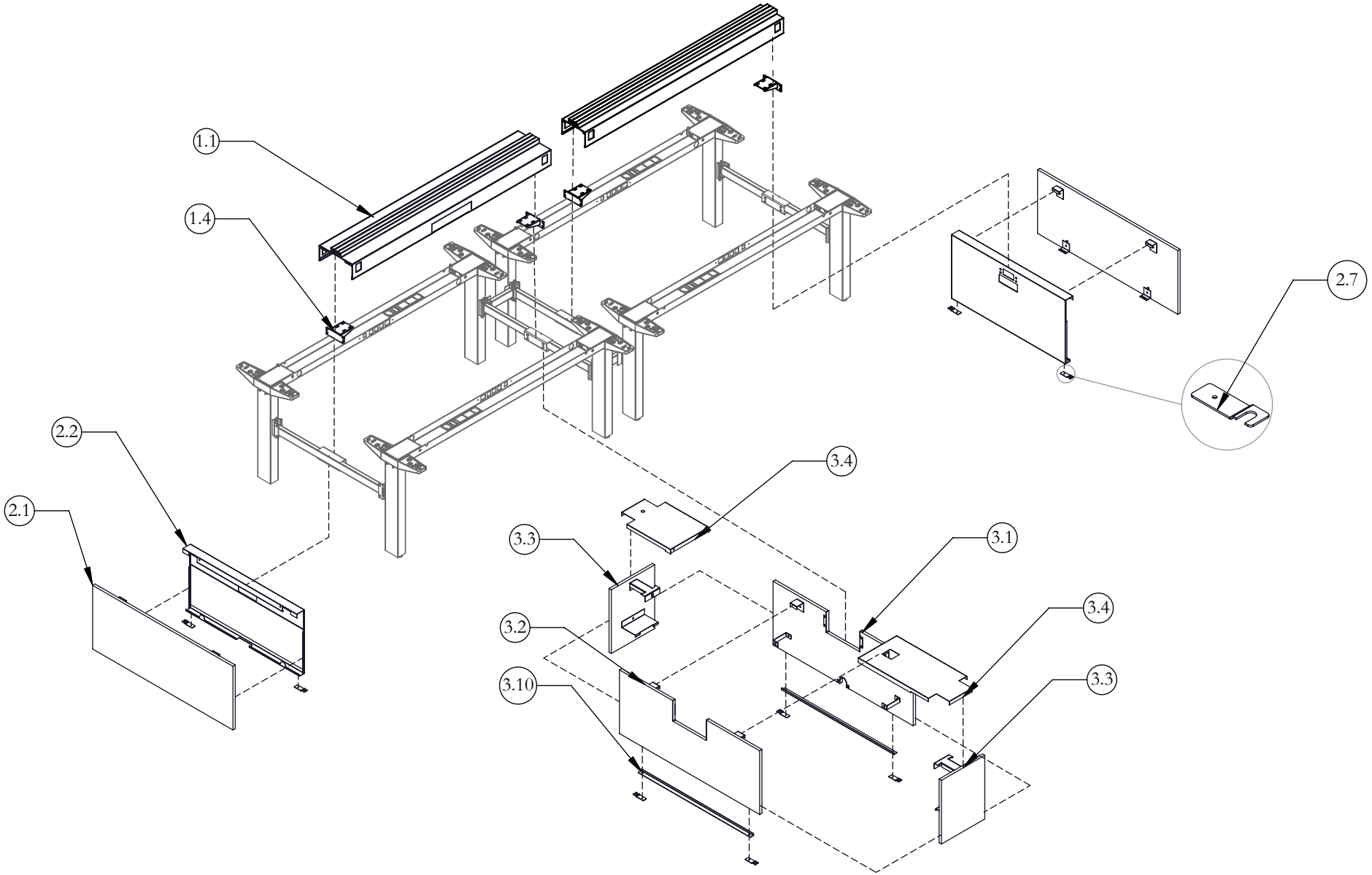

Part & Product Identification

ITEM NO.	PREVIEW	DESCRIPTION	PART NUMBER	QTY
1. NAVIGATE WIRE CHANNEL (HNBFCN) X1				
1.1	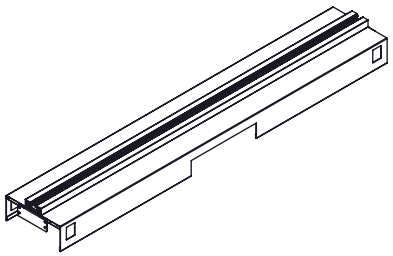	CABLE CHANNEL ASSY - DOUBLE SIDED	HNBFCNB	1
1.2	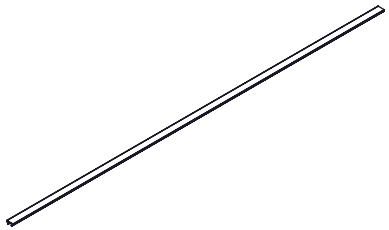	CENTER RAIL EXTRUSION CAP CUT LENGTH	A23-5200-X	1
1.3	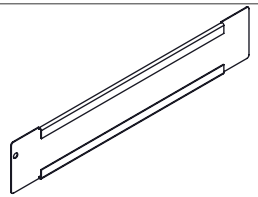	ACCESS DOOR NAVIGATE WIRE CHANNEL	A16-7374	2
1.4	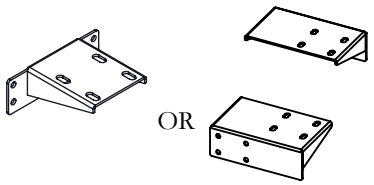	SUPPORT BRKT - SCREEN RAIL	A16-3009 OR A16-7245	2
1.5	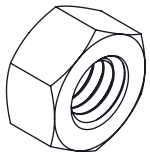	5/16-18 HEX NUT, 1/2 A/F, .265 THK.	E01-0755	8

ITEM NO.	PREVIEW	DESCRIPTION	PART NUMBER	QTY
1.6	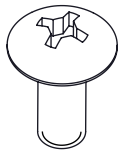	1/4-20X5/8" MACH SCR, BLACK, QUAD,TRUSS	E01-0113	8
1.7	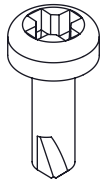	#8-18X1/2"CROSS SQUARE COMB.SELF	E07-0012	12
1.8	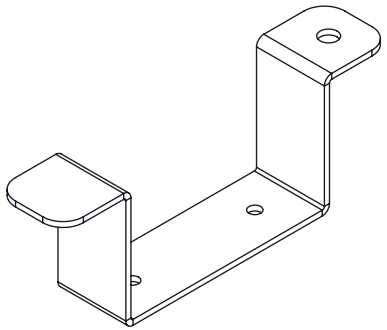	HANGER - CLUB TALK	A16-2364	2
1.9	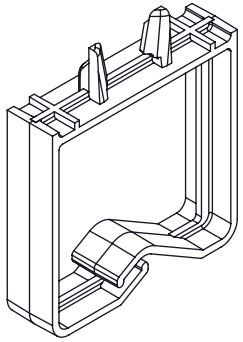	WIRE MANAGER CLIP	B02-2007	16

Part & Product Identification

ITEM NO.	PREVIEW	DESCRIPTION	PART NUMBER	QTY
2. Navigate End Gable - Solid (HNBCGESN) x1				
2.1	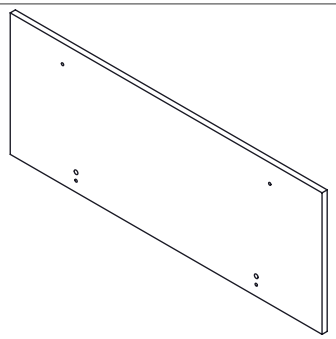	COVER FOR END GABLE, DOUBLE SIDED, HAB	C07-4595-X	1
2.2	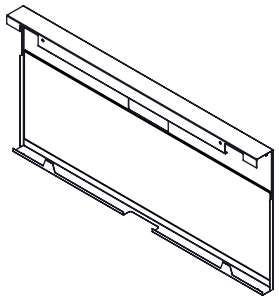	INSIDE COVER ASSY FOR WOOD END GABLE, DOUBLE SIDED, HAB	N09-8799-X	1
2.3	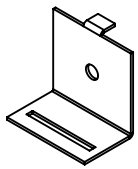	BOTTOM BRACKET FOR WOOD END GABLE, HAB	a16-3020	2
2.4	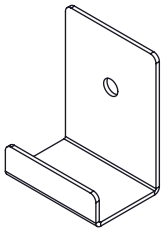	HANGING BRACKET FOR WOOD END GABLE, HAB	A16-3021	2

ITEM NO.	PREVIEW	DESCRIPTION	PART NUMBER	QTY
2.5	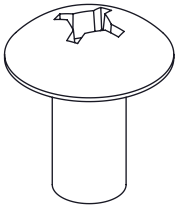	1/4-20 UNCx0.500" 2A,CROSS/SQ.COMB.SOCK.,TRS.HEAD,MACH.SCR.,STEEL,ZN	E01-0110	4
2.6	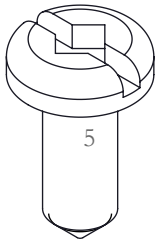	#10X1/2" TAP SCR, QUAD,PAN	E01-0023	2
2.7	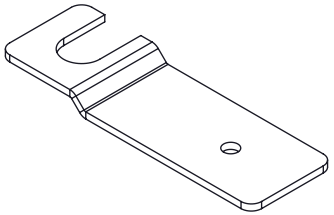	GABEL CONNECTING PLATE	A16-3651	2

Part & Product Identification

ITEM NO.	PREVIEW	DESCRIPTION	PART NUMBER	QTY.
3. Navigate Mid Gable - Solid - Mid Condition (HNBCGMSN) x1				
3.1	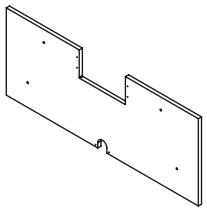	SIDE COVER FOR MID GABLE, DOUBLE SIDED, HAB	C05-8921-X	1
3.2	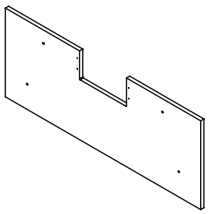	SIDE COVER FOR MID GABLE, DOUBLE SIDED, HAB	C05-8863-X	1
3.3	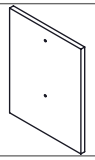	FRONT COVER FOR MID GABLE, HAB	C05-8864	2
3.4	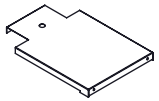 & 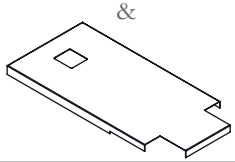	TOP COVER FOR WOOD MID GABLE W/POWER POLE, DOUBLE SIDED, HAB	A16-3087-X & A16-3088-X	1 Each
3.5		HANGING BRACKET, FOR WOOD MID GABLE, HAB	A16-3203	4
3.6	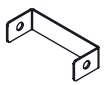	BOTTOM CONNECTING BRKT FOR WOOD MID GABLE, HAB	A16-3026	4

ITEM NO.	PREVIEW	DESCRIPTION	PART NUMBER	QTY.
3.7		FRONT HANGING BRKT FOR WOOD MID GABLE, HAB	A16-3028	2
3.8	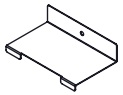	BOTTOM BRKT FOR WOOD MID GABLE, HAB	A16-3027	2
3.9		1/4-20 UNCx0.500" 2A,CROSS/SQ.COMB.	E01-0110	12
3.10	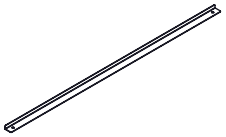	GABEL BOTTOM ANGLE BAR, DOUBLE SIDED, HAB	A16-3655-X	2
3.11	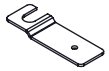	GABEL CONNECTING PLATE	A16-3651	4
3.12		#10X1/2" TAP SCR, QUAD,PAN	E01-0023	4
3.13	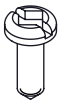	SCREW, WOOD,#6 X 7/16", DEEP THREAD, QUAD, TRUSS	E04-0050	10
3.14	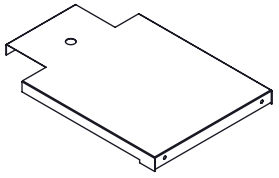	TOP COVER FOR WOOD MID GABLE, HAB (OPTIONAL)	A16-3029-X	2

REMOVE SUPPORT BRACKETS

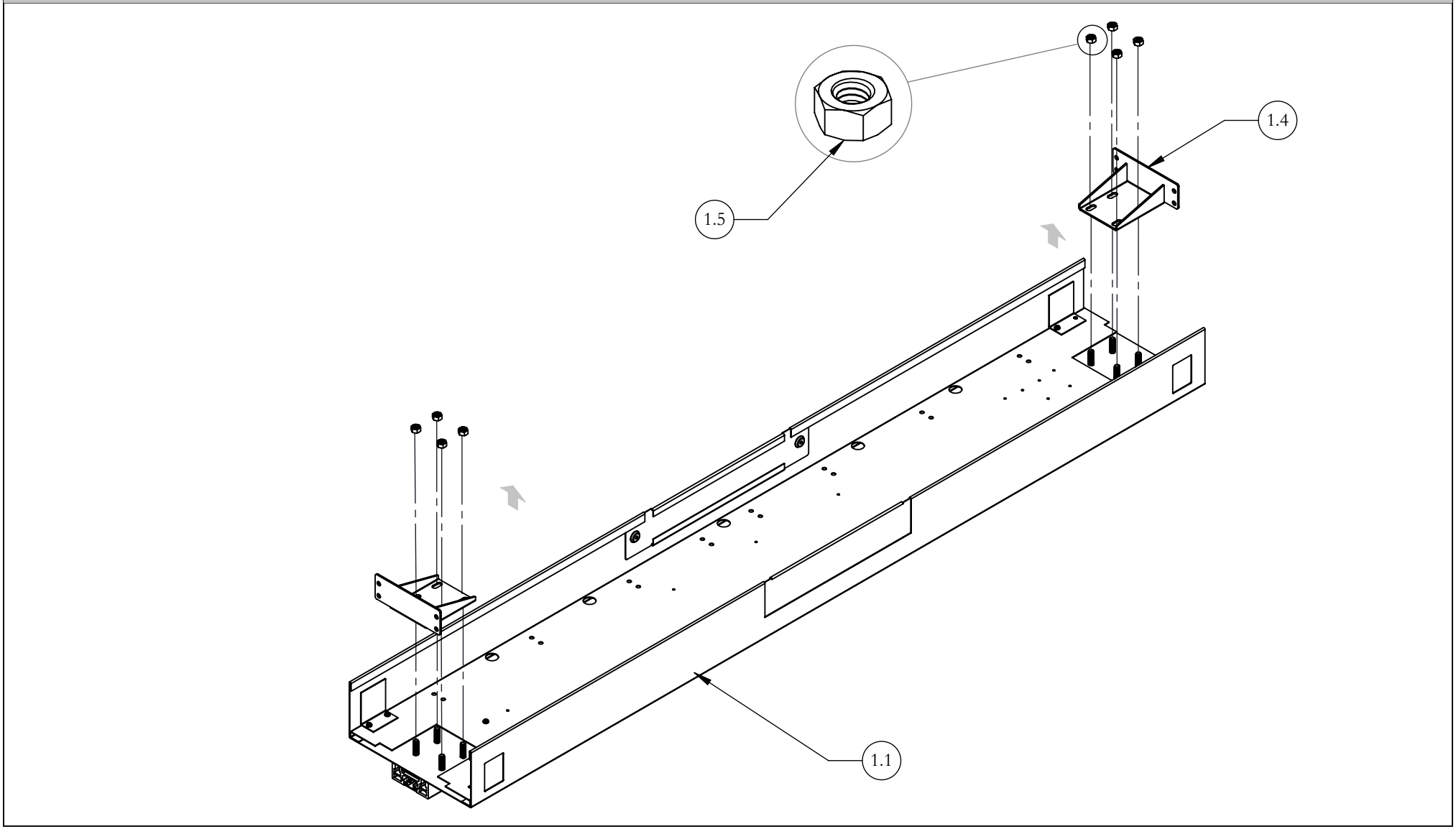

STEP 1: Remove Support Brackets.

ATTACH GABLE SUPPORT BRACKET

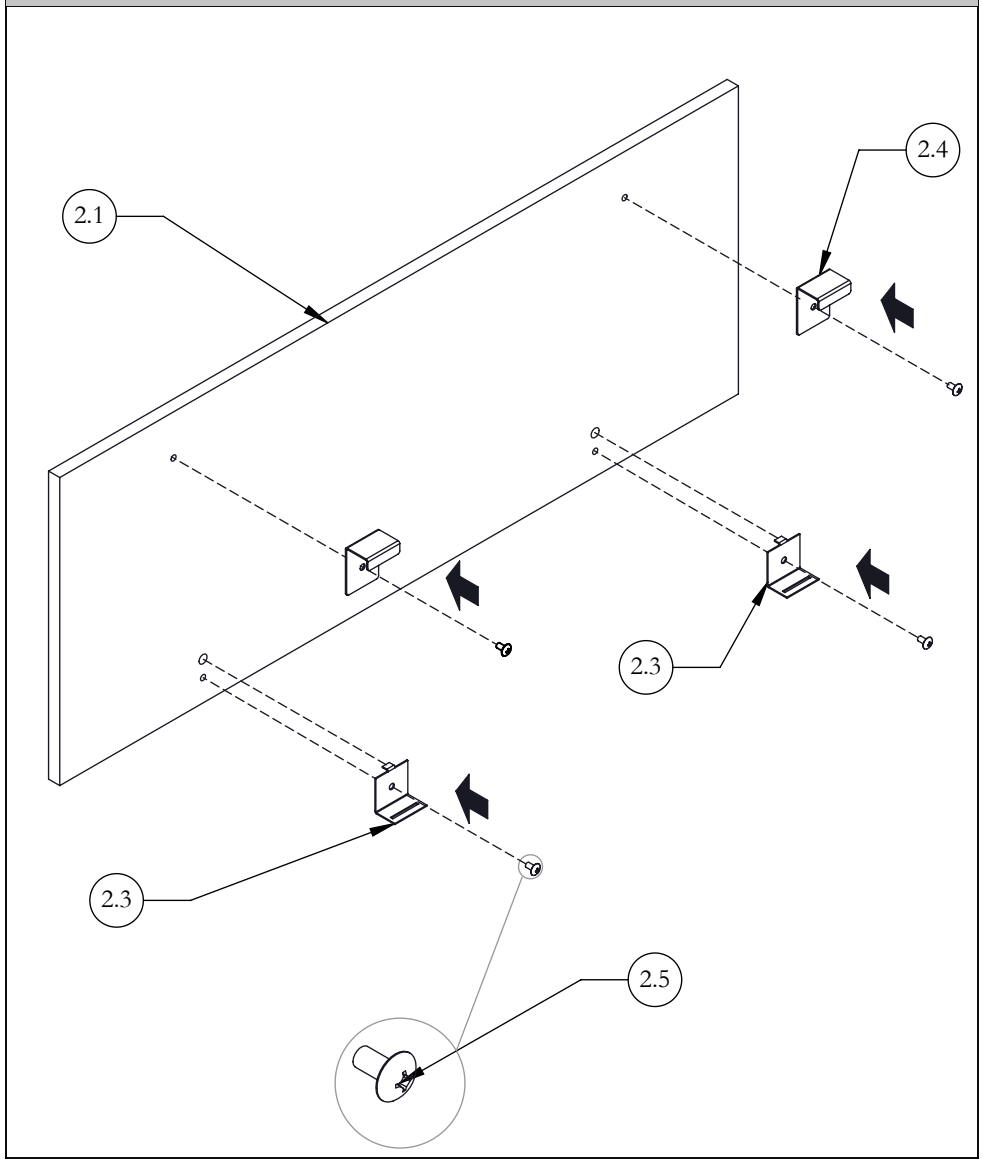

STEP 2: Attach and Fasten Gable Brackets.

ATTACH SUPPORT BRACKET

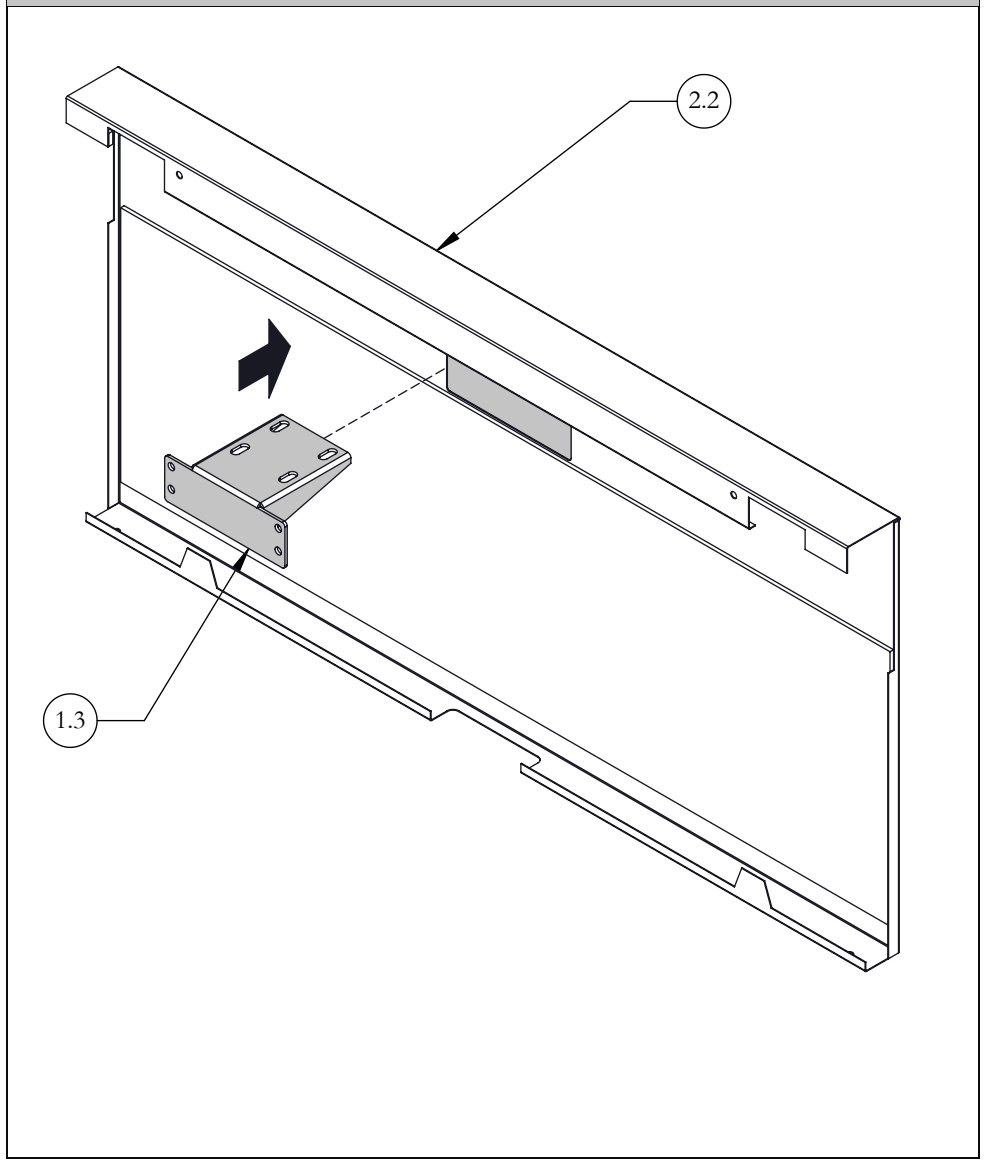

STEP 3: Insert Support Bracket through the cut-out on the Inside Cover Assembly as shown.

ATTACH CONNECTING PLATES TO FRAME LEGS

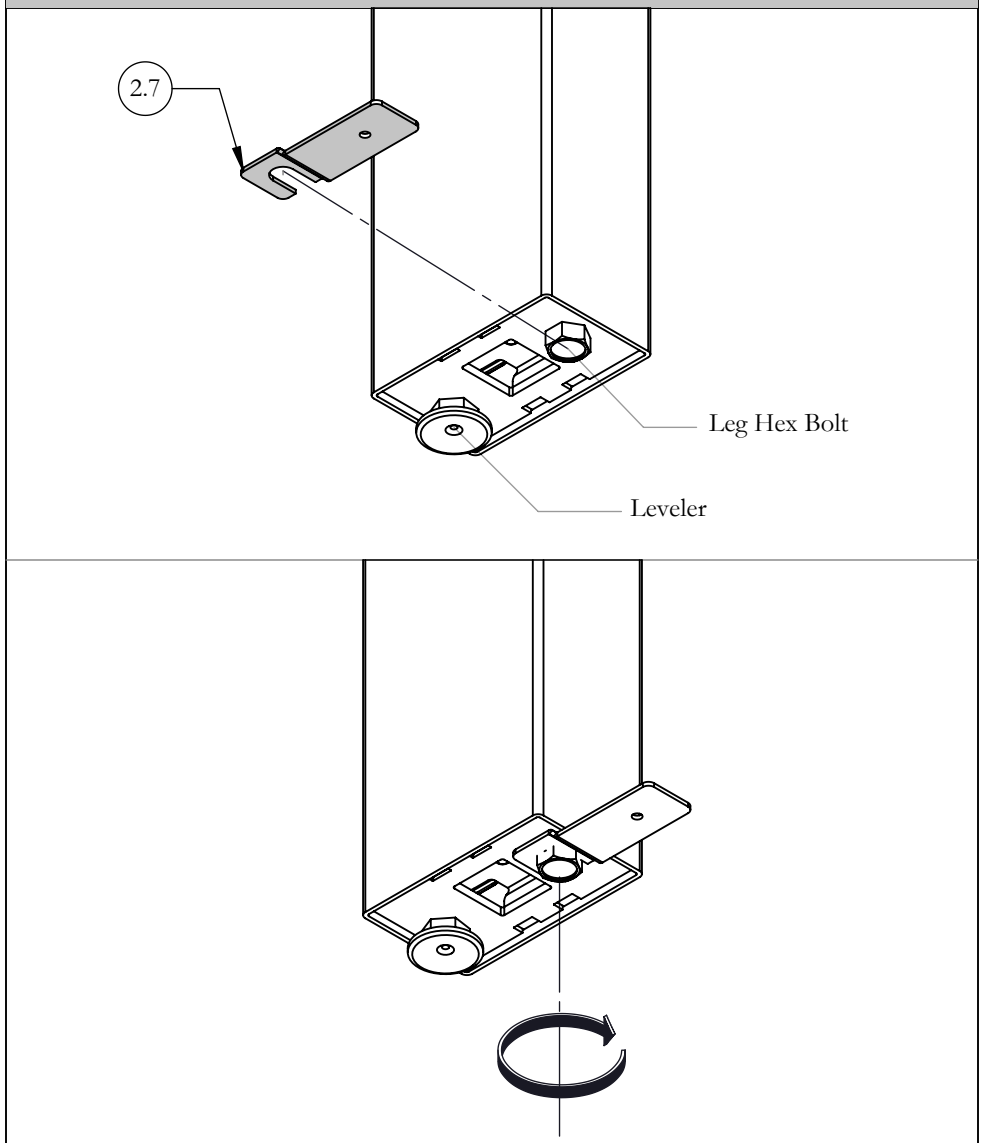

STEP 4: Loosen Legs Hex Bolt on both Legs to allow enough clearance for gable connecting plate. Then Fasten Gable Connecting Plates to Frame Legs.

MOUNT INSIDE COVER ASSEMBLY

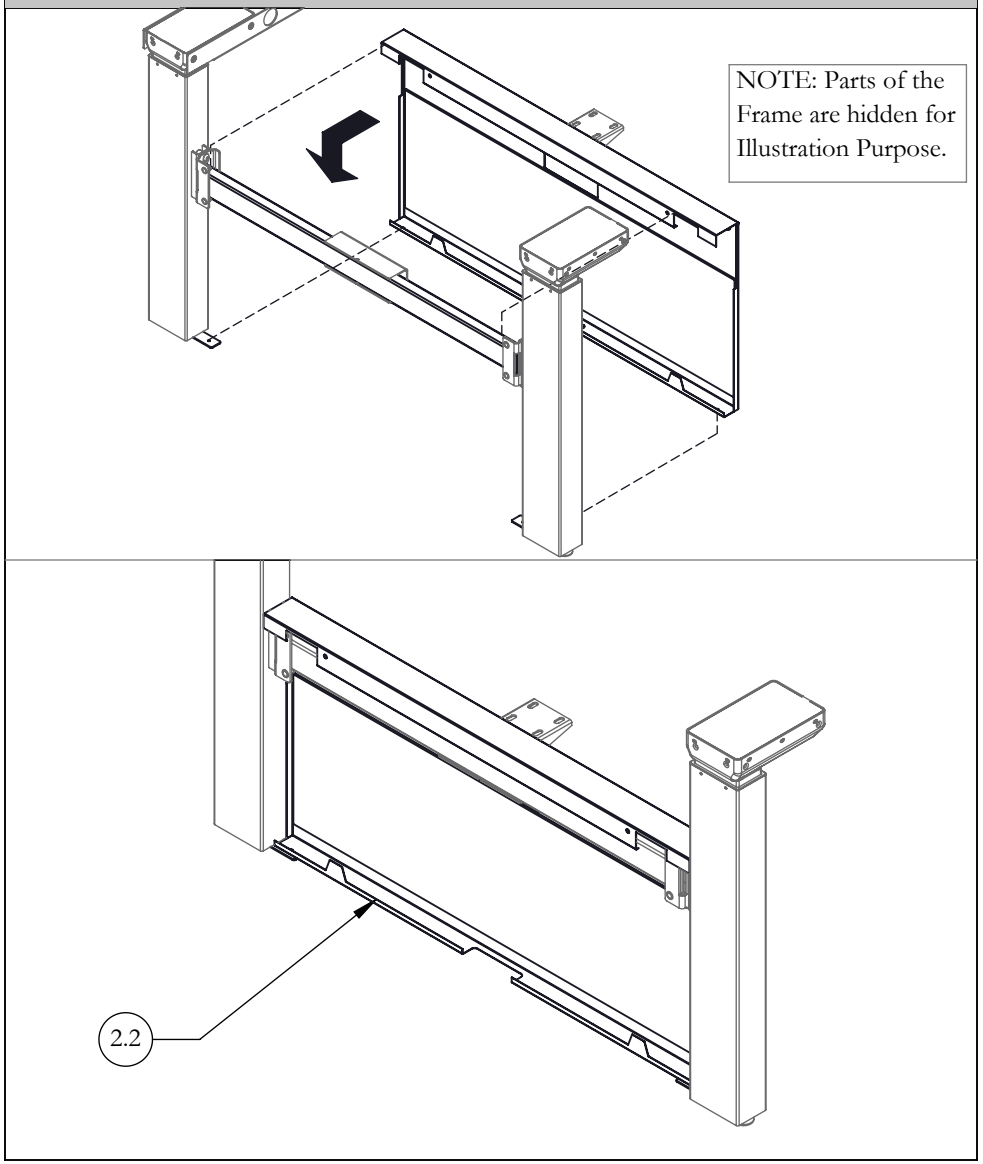

STEP 5: Mount Inside Cover Assembly onto Frame Stretcher Bar. Make sure the face of the Inside Cover assembly is flush with the Leg as shown Above.

SECURE INSIDE COVER IN PLACE

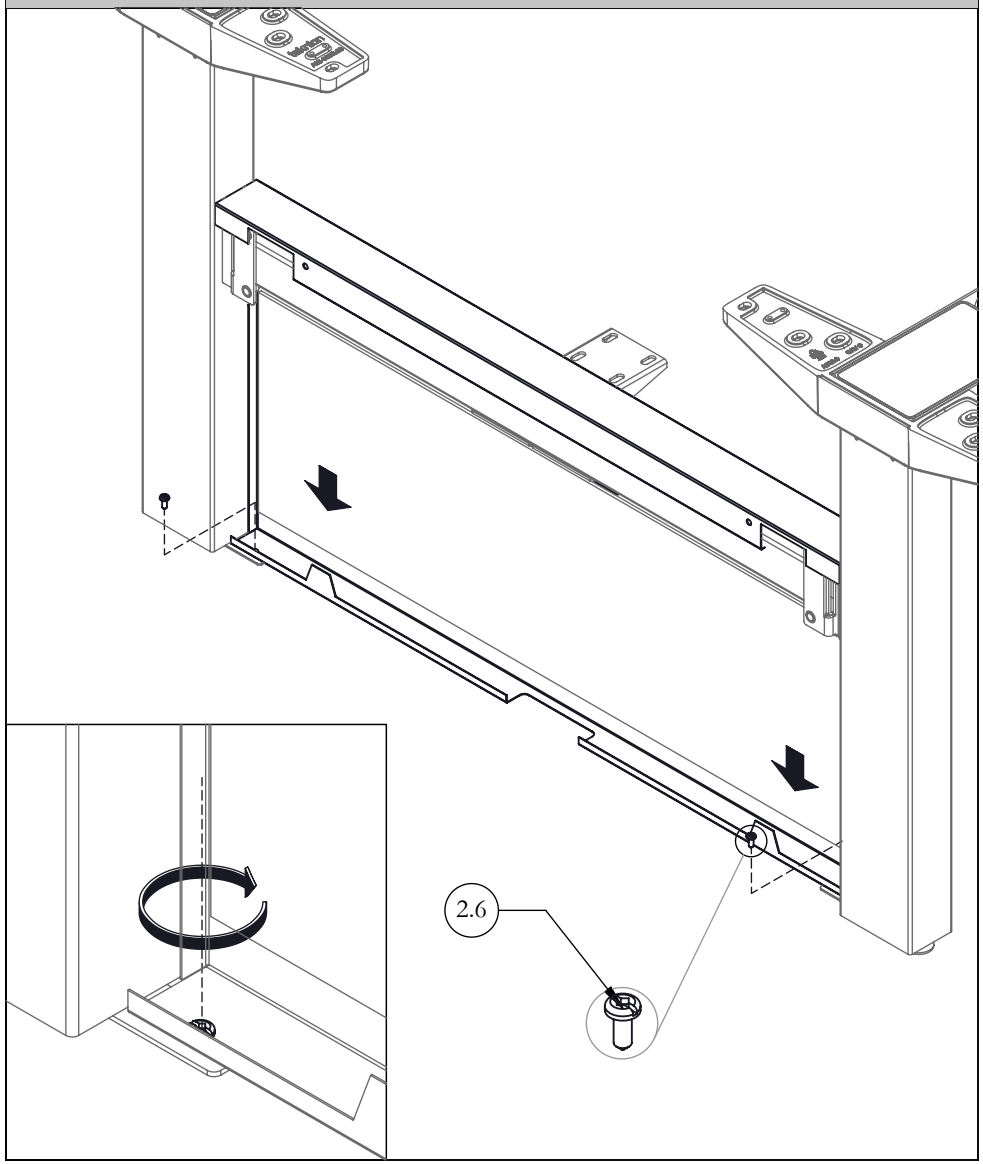

STEP 6: Make sure the face of the Inside Cover Assembly is flush with the Leg. Secure Inside Cover Assembly to Gable Connecting Plate on both sides using Tap Quad Pan screws provided.

SECURE INSIDE COVER ASSEMBLY TO FRAME

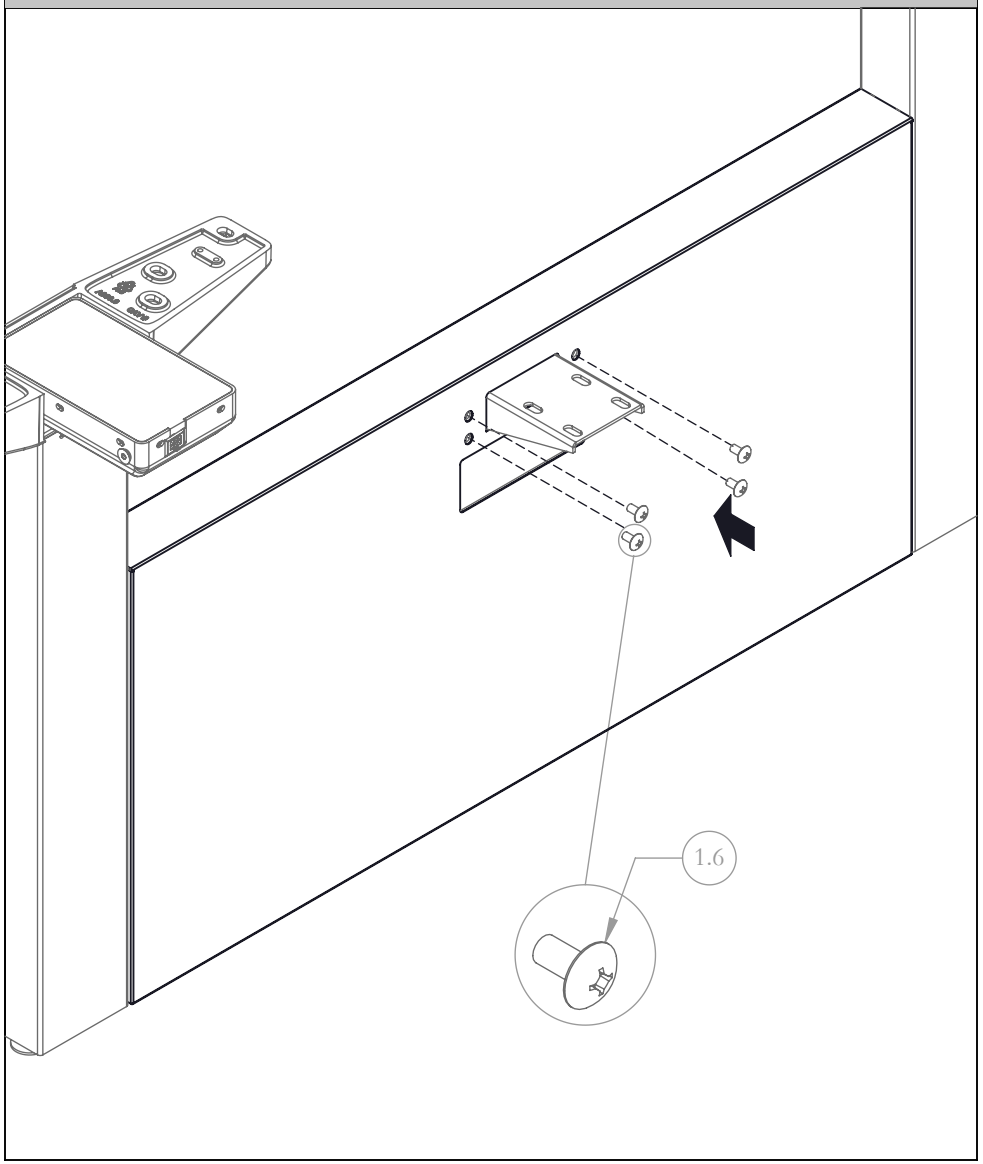

STEP 7: Secure Inside Cover Assembly to Stretcher Bar with Bolts.

MOUNT OUTSIDE COVER ASSEMBLY

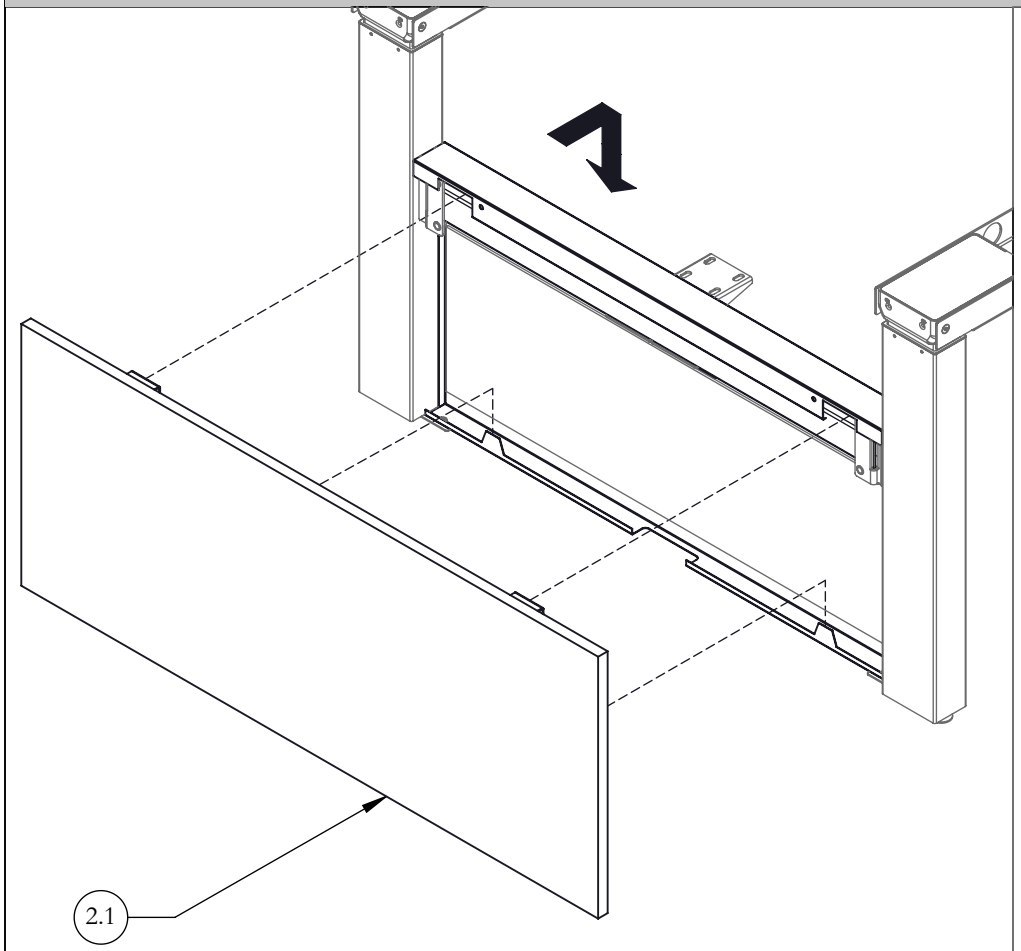

NOTE: Parts of the Frame are hidden for Illustration Purpose.

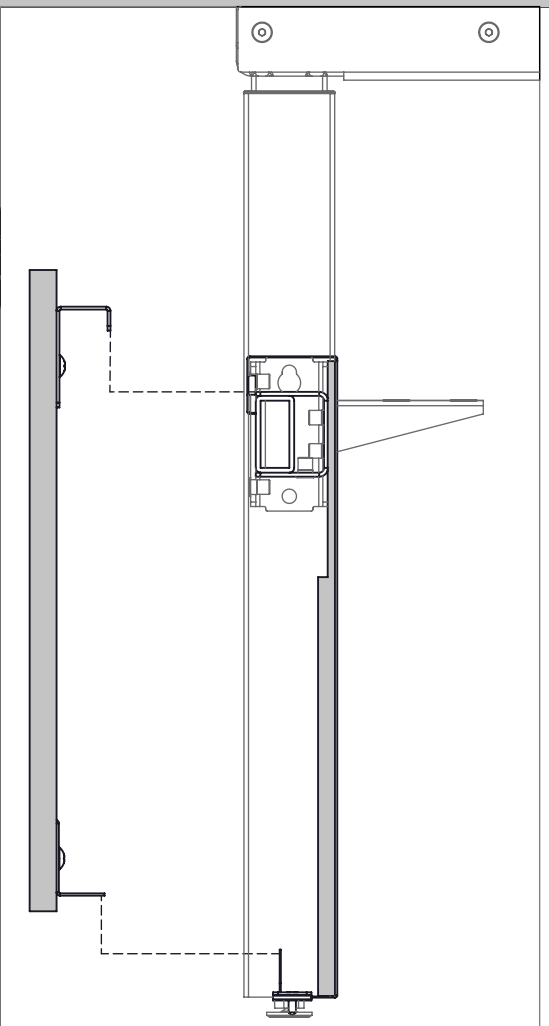

Section View

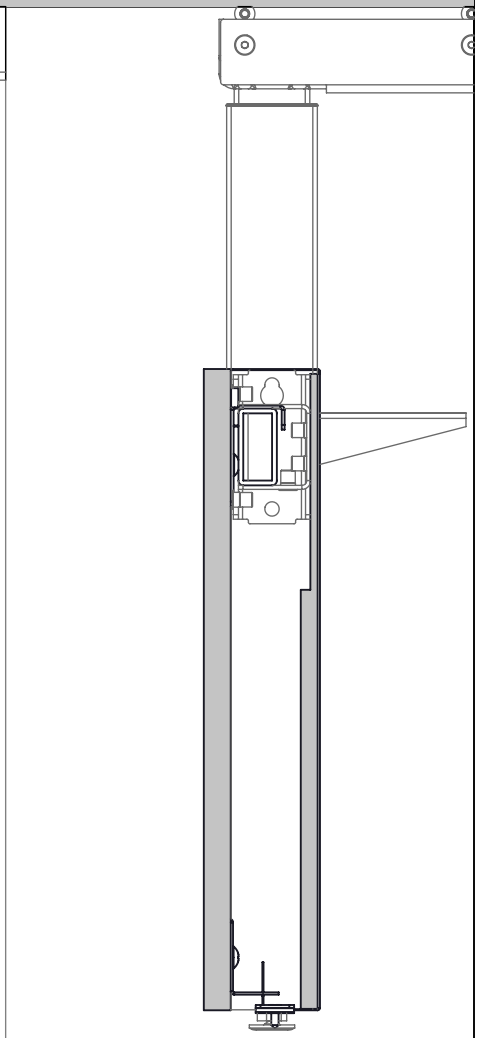

Section View

STEP 8:Mount Outside Cover Assembly to the highlighted part of the Inside Cover Assembly as shown.

ATTACH CONNECTING PLATES TO FRAME

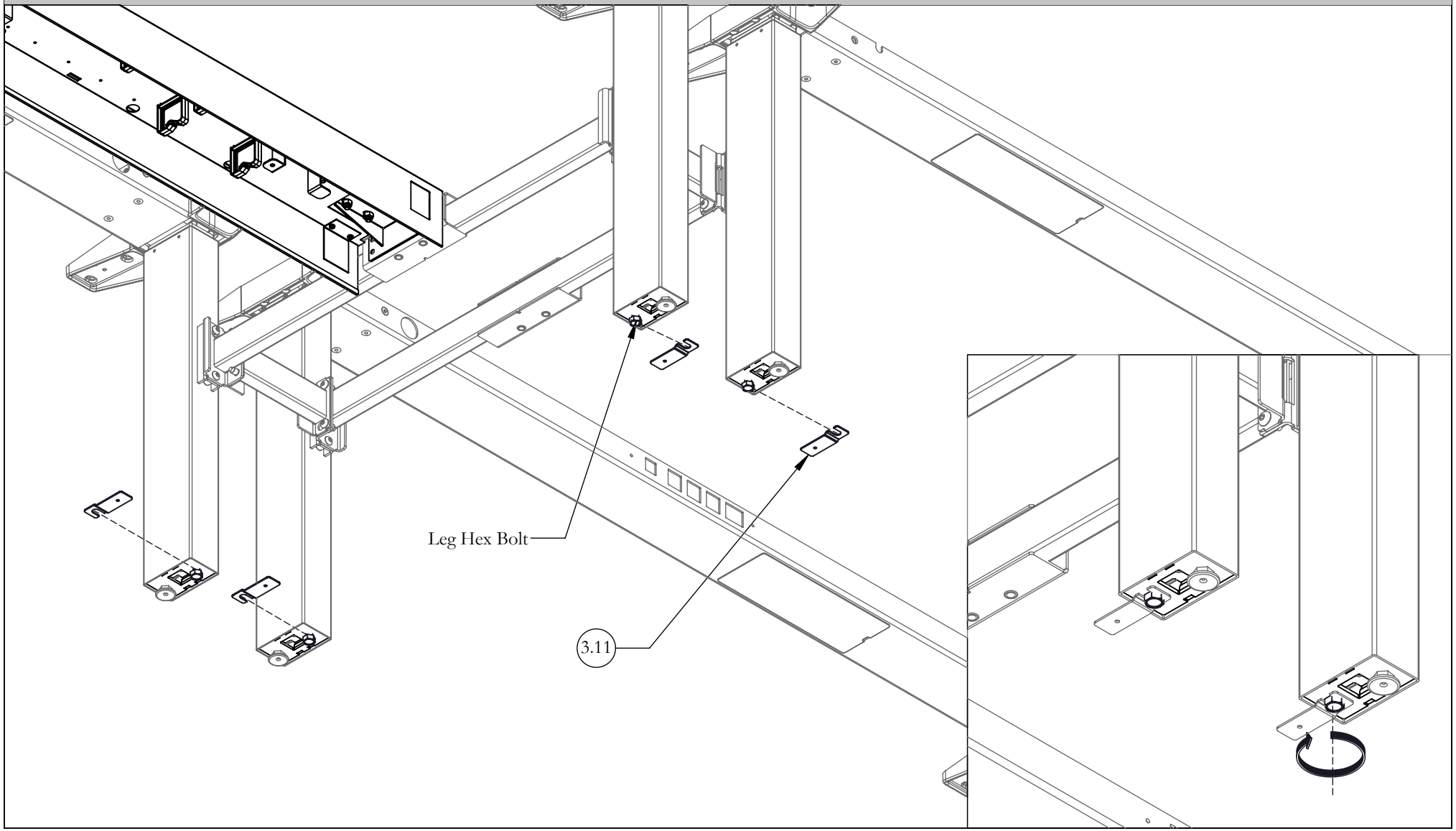

STEP 9: Loosen Hex Bolt to allow enough room for Gable Connecting Plate. Fasten Gable Connecting Plates to Frame Legs.

MOUNT BOTTOM ANGLE BAR

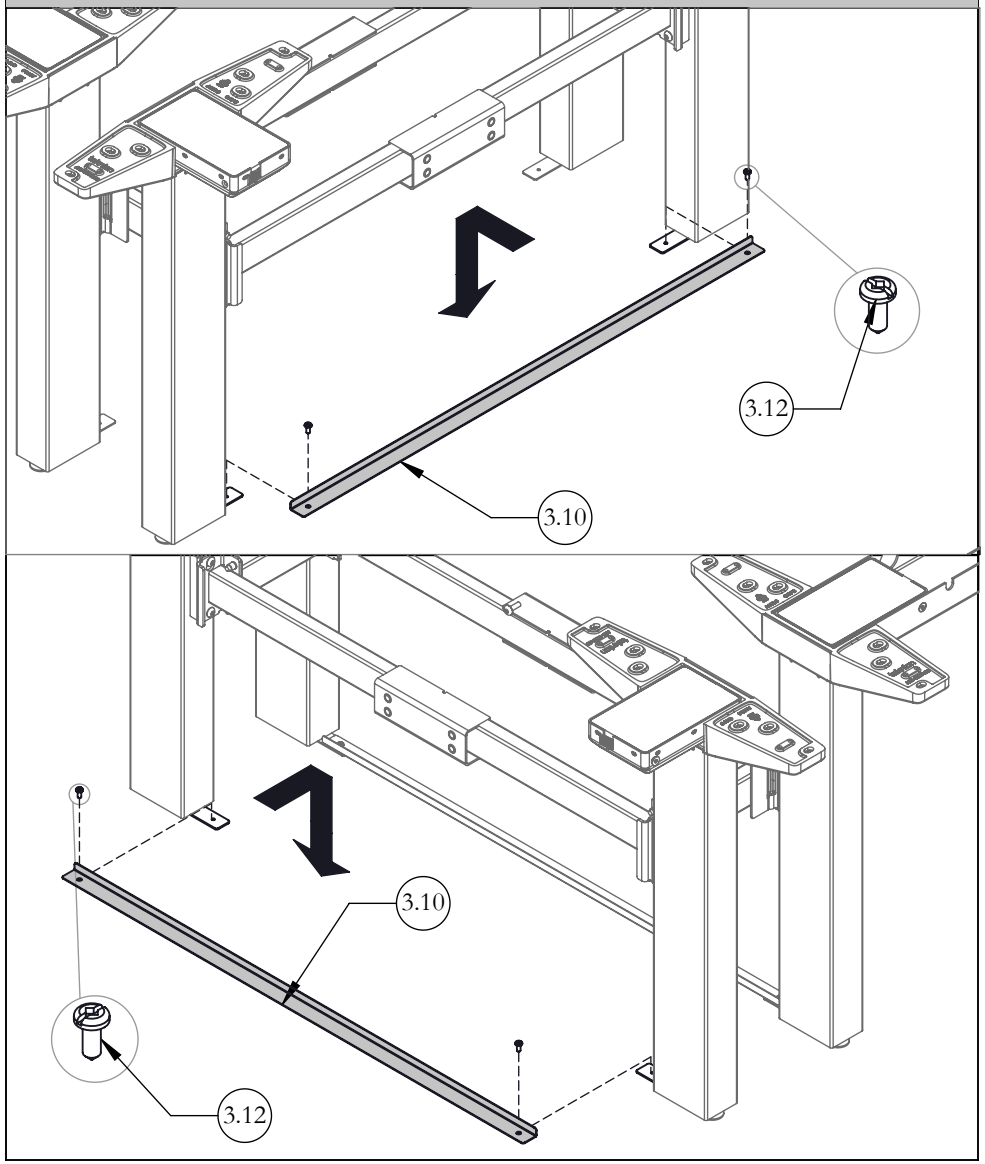

STEP 10: Mount Bottom Angle Bar and Secure to Gable Connecting Plate on both sides using Tap Quad Pan screws provided.

MID POWER POLE SUPPORT PLATE

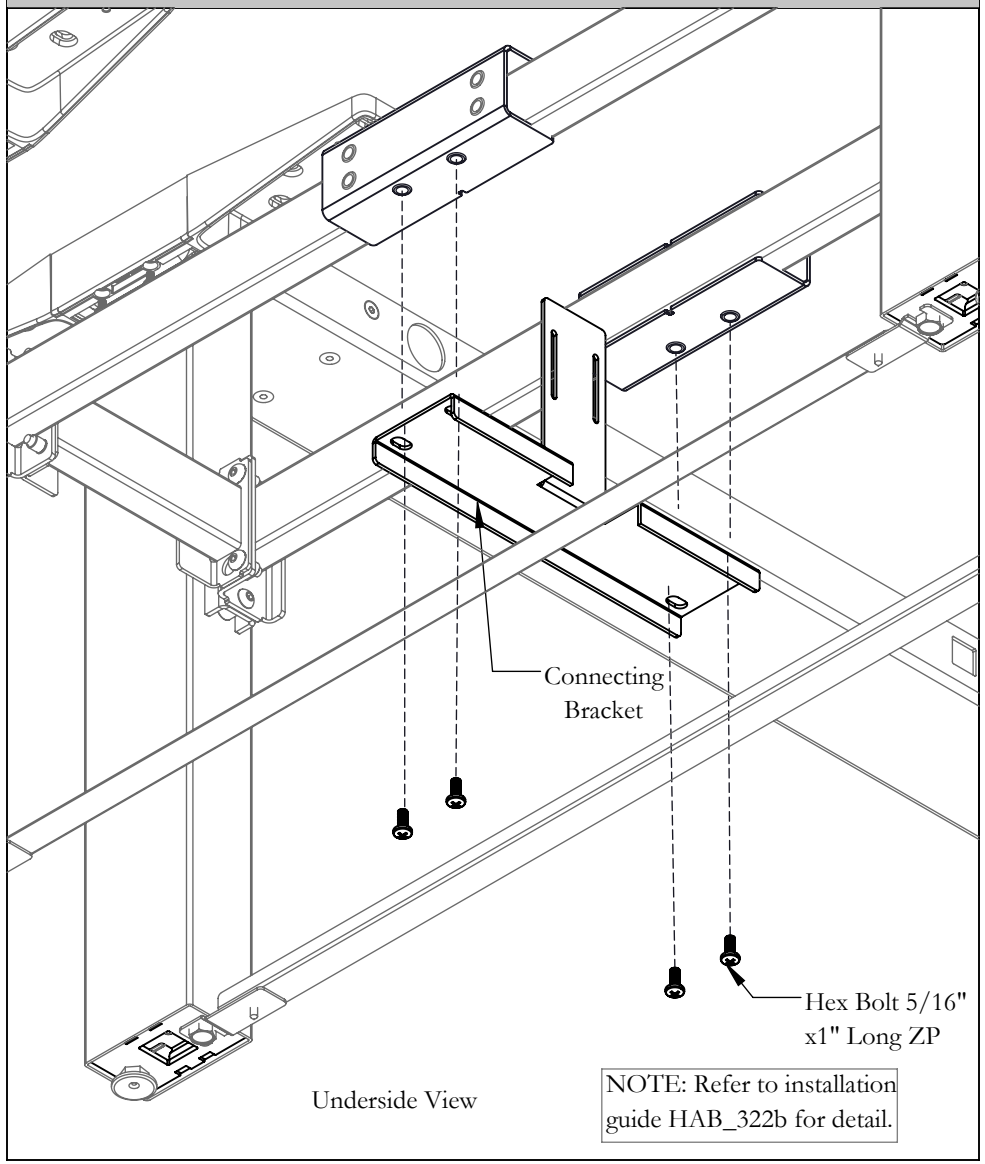

Optional: If Mid Power Pole is Specified. Please fasten Connecting Bracket to the Underside of the Stretchbar Bars as shown.

ATTACH MID GABLE SUPPORT BRACKET

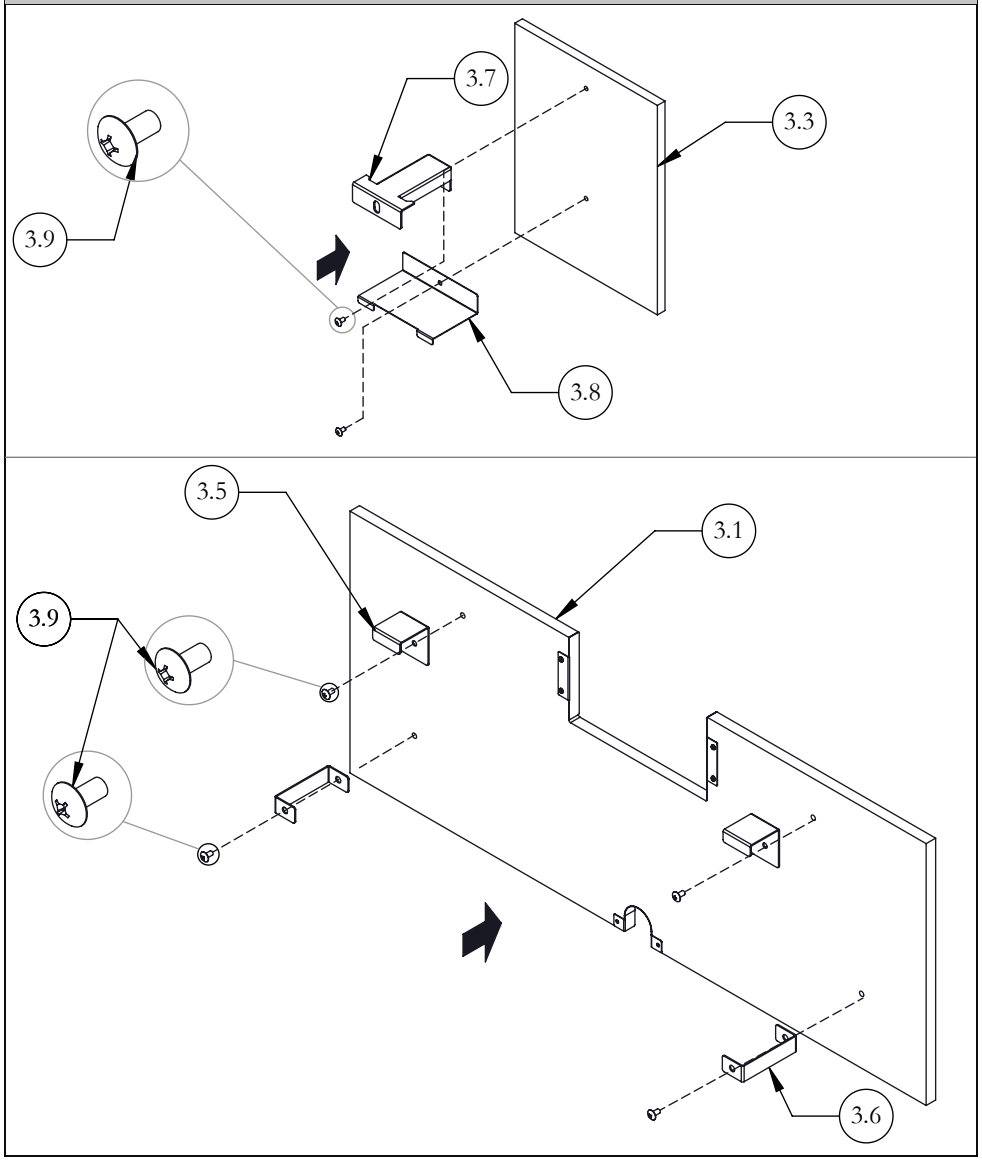

STEP 11: Secure the Brackets and Cover Plates to Side Cover Assemblies and Front Cover as Shown.

MOUNT SIDE COVER ASSEMBLY

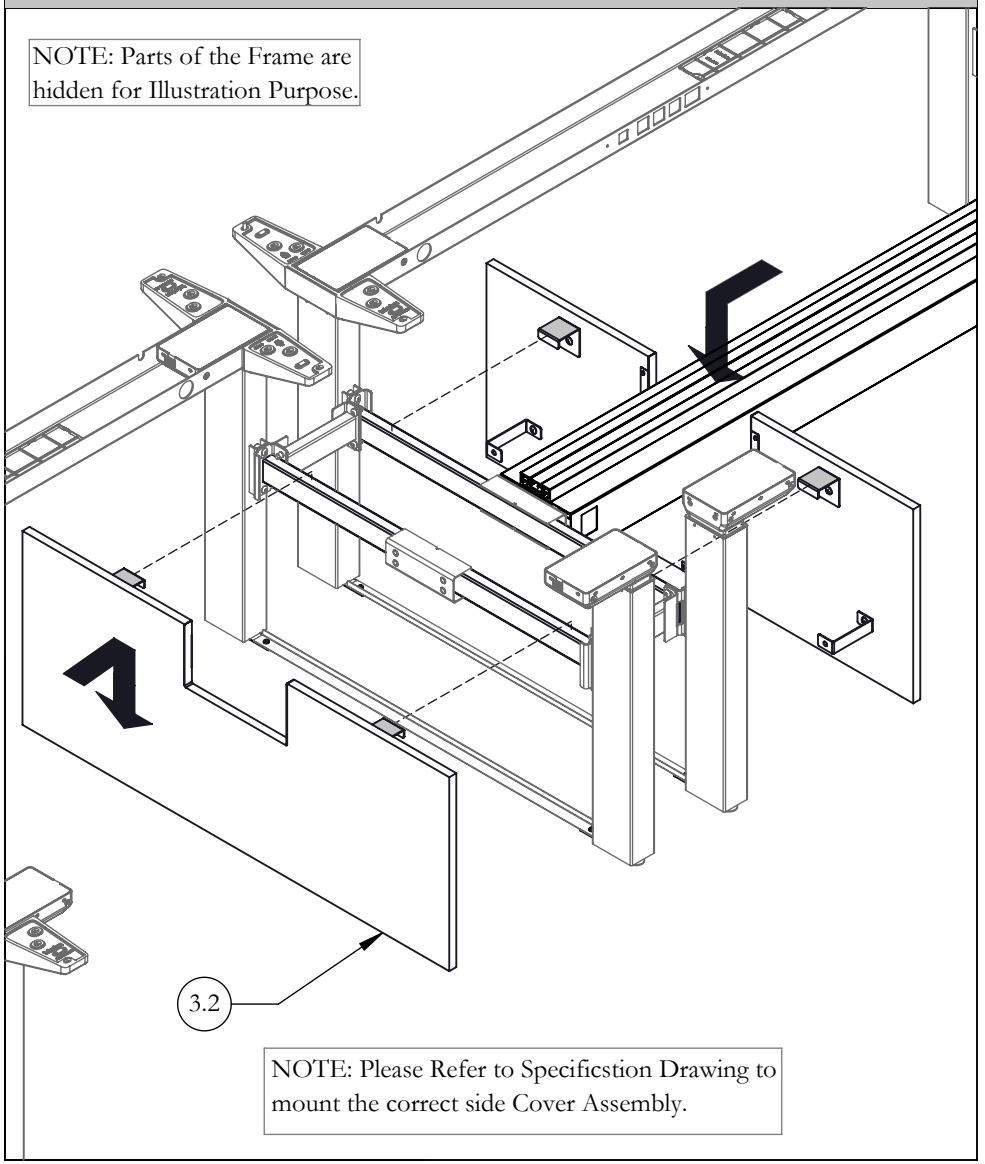

STEP 12: Mount Side Cover Assembly onto the Stretcher Bar as shown.

SECURE SIDE COVER ASSEMBLY

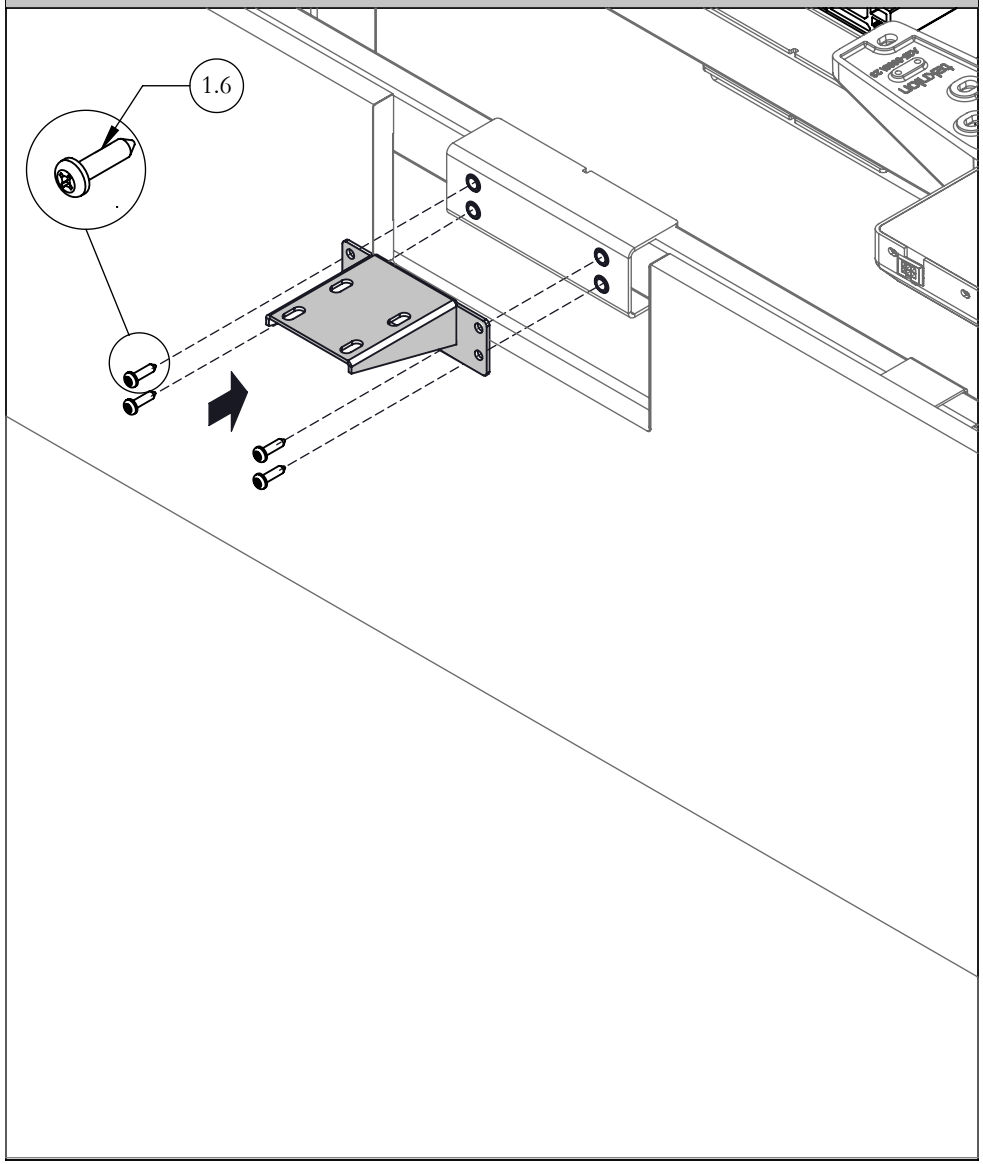

STEP 13: Secure Side Cover Assembly onto Stretcher Bar with Bolts. Do it on both Sides.

CABLE CHANNEL ASSEMBLY

NOTE:Install Cable Channel Cover Plate on Cable Channel Where Vertical Wire Carrier is not specified or unused location.

NOTE: Electrics are not included with the Cable Channel.

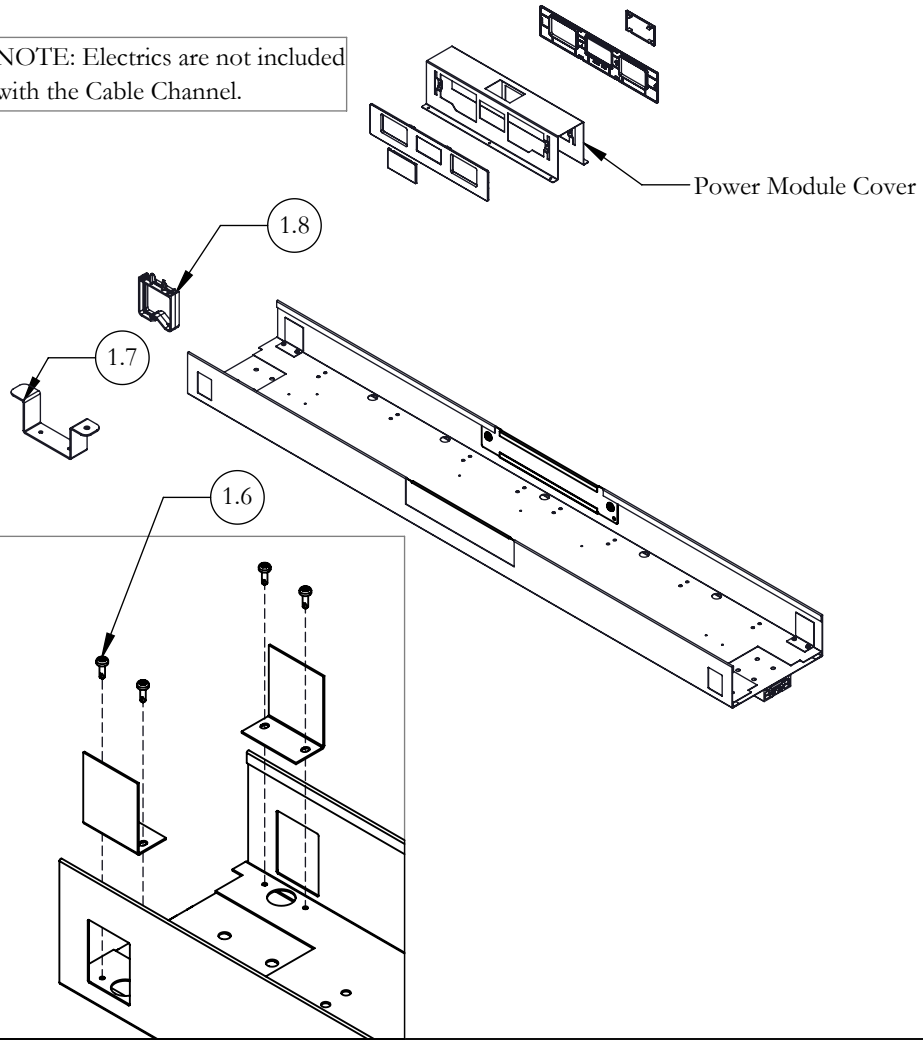

NOTE: Electrics components to be installed on Cable Channel before connecting to Support Bracket. Please refer to Installation Guide 321a, 321b, 321c,322a or 322b for corresponding Electrics installation.

ATTACH CABLE CHANNEL & CENTER RAIL

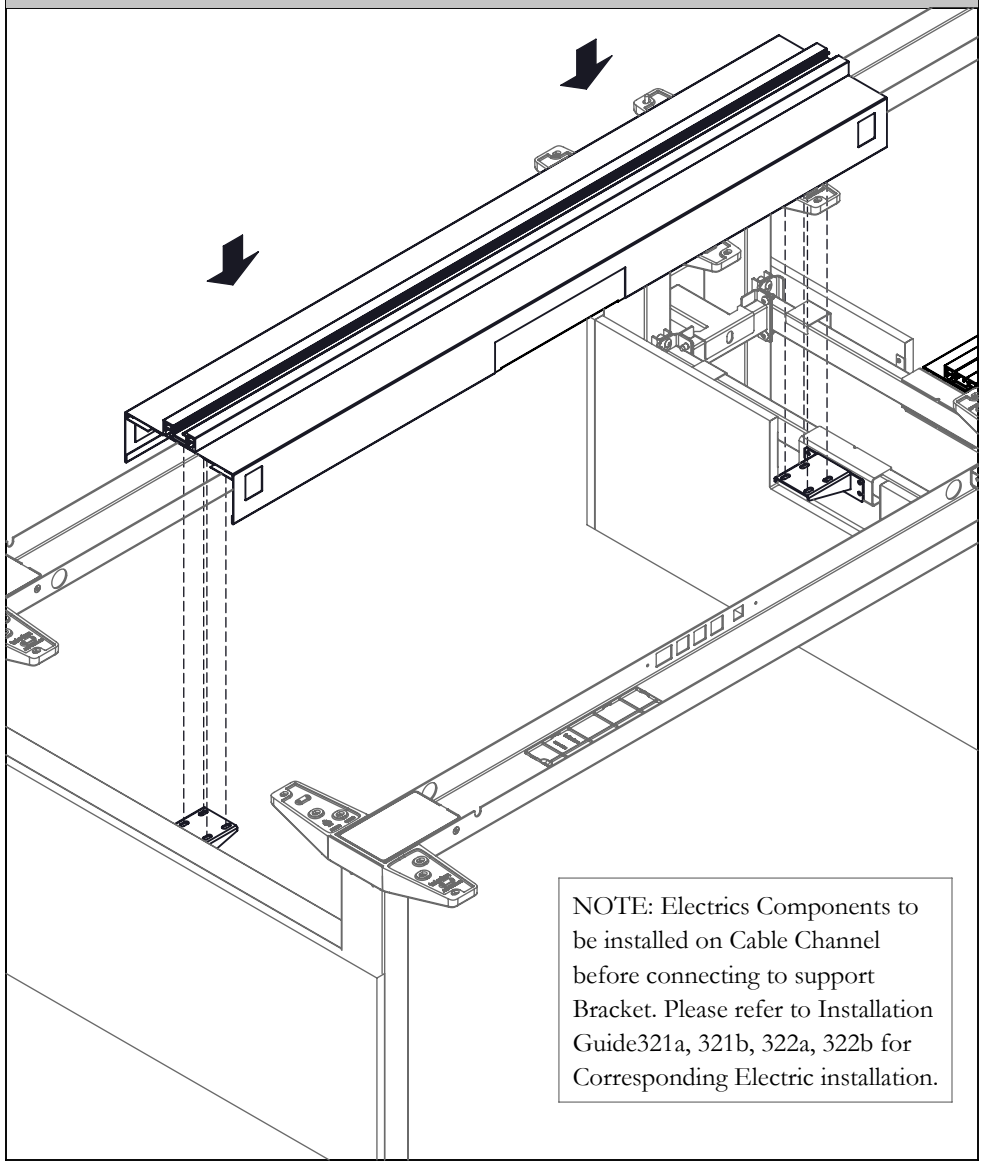

STEP 14: Align holes on Support Brackets, Cable Channel Assembly. Insert Bolts inside Centre Rail Extrusion through Cable Channel Assembly and Brackets as shown

SECURE CABLE CHANNEL

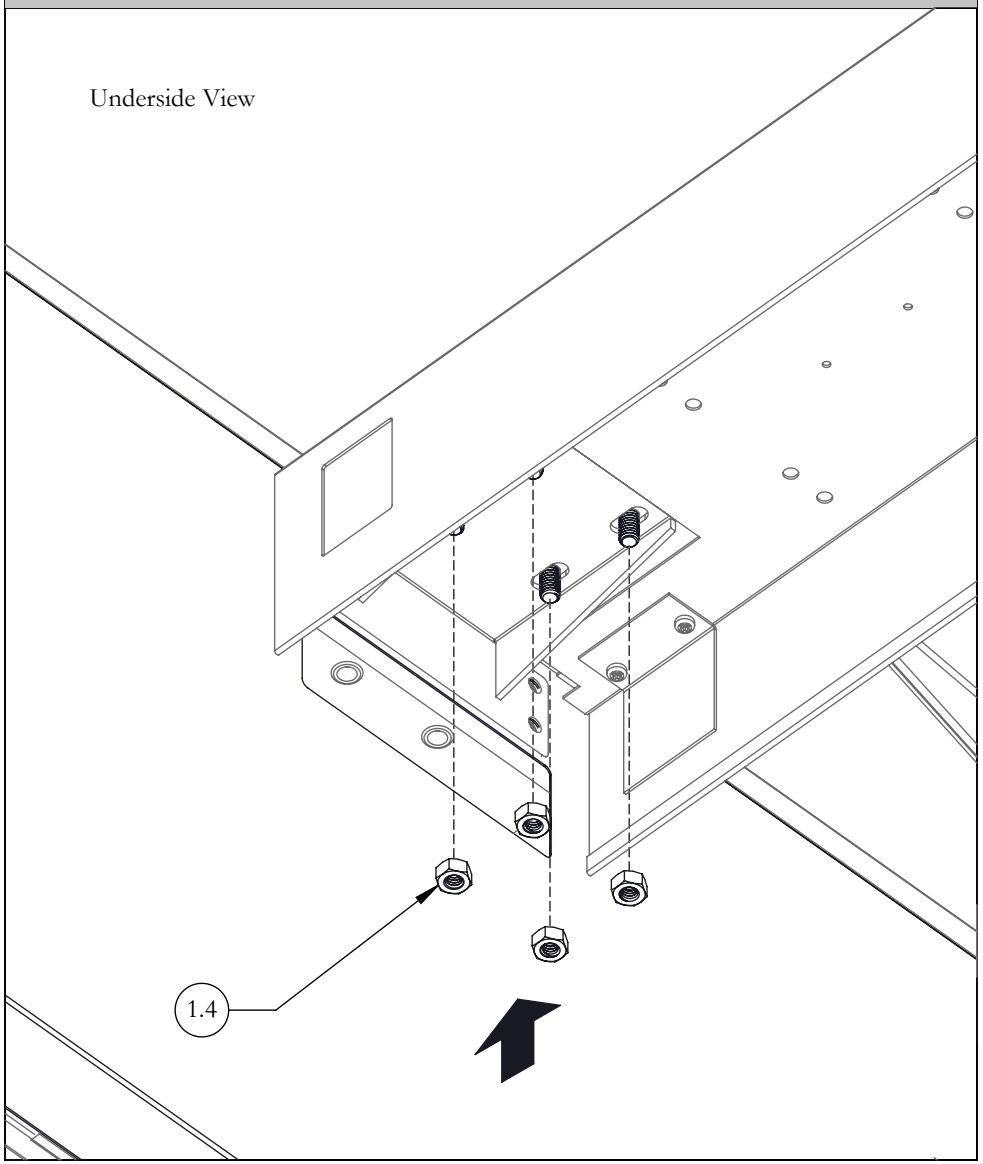

STEP 15: Secure Cable Channel in place with Nuts

MOUNT FRONT COVER ASSEMBLY

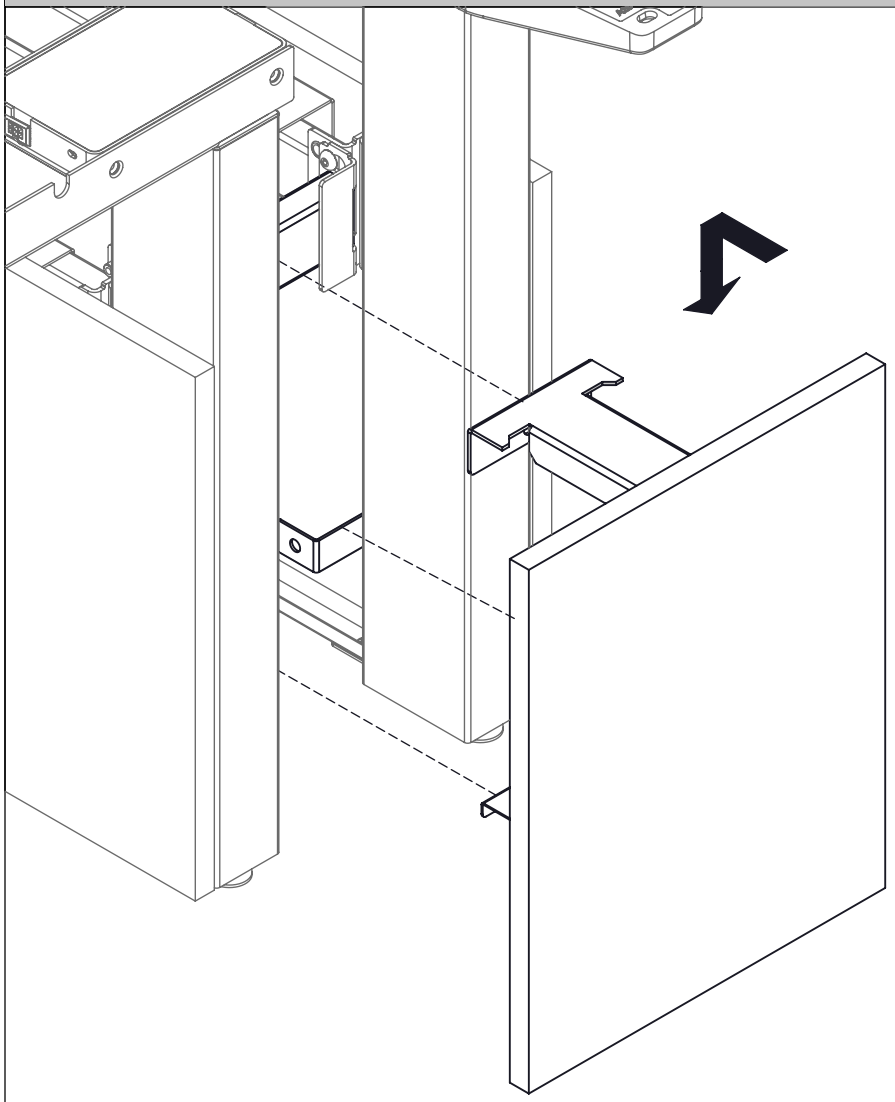

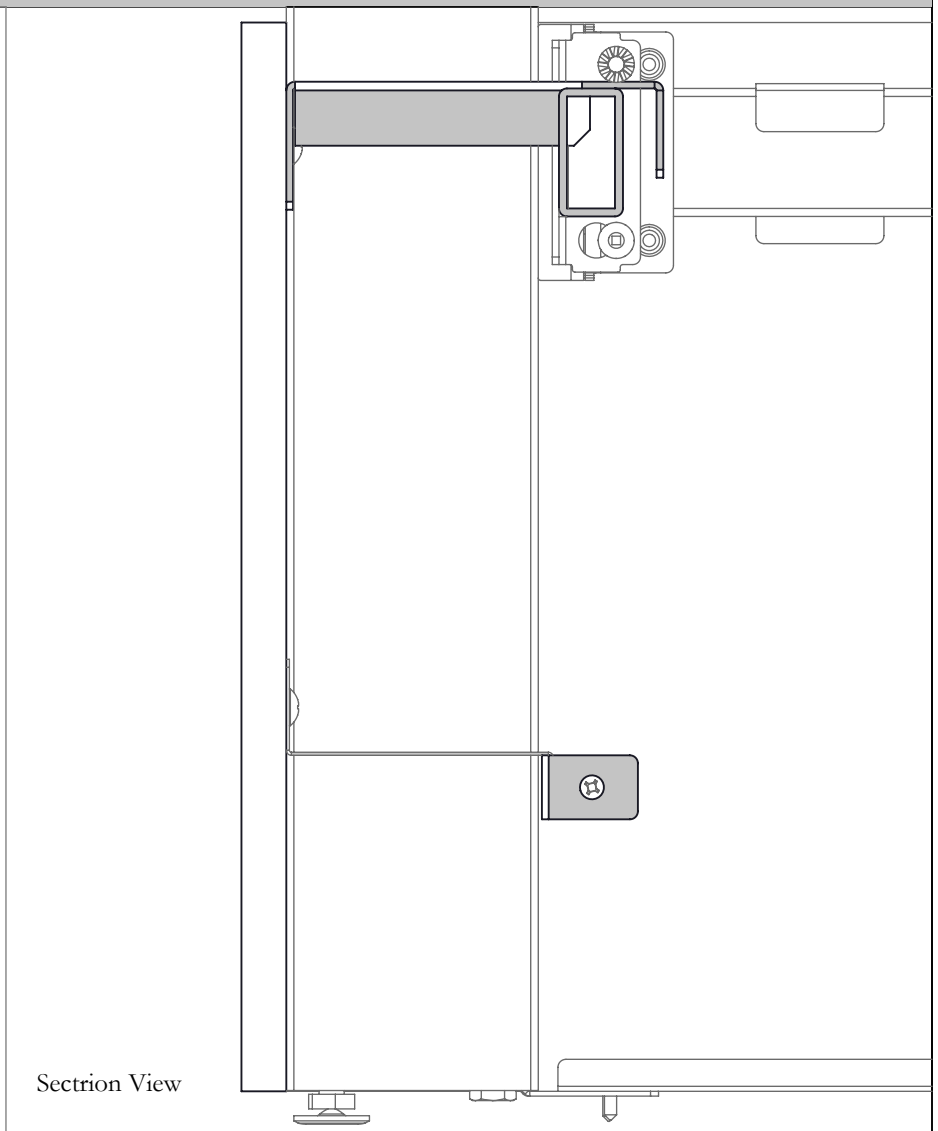

Sectrion View

STEP 16: Mount Front Covers onto the Frame Link and Bottom connecting Brackets.

TOP COVER W/ POWER POLE CUTOUT (OPTIONAL)

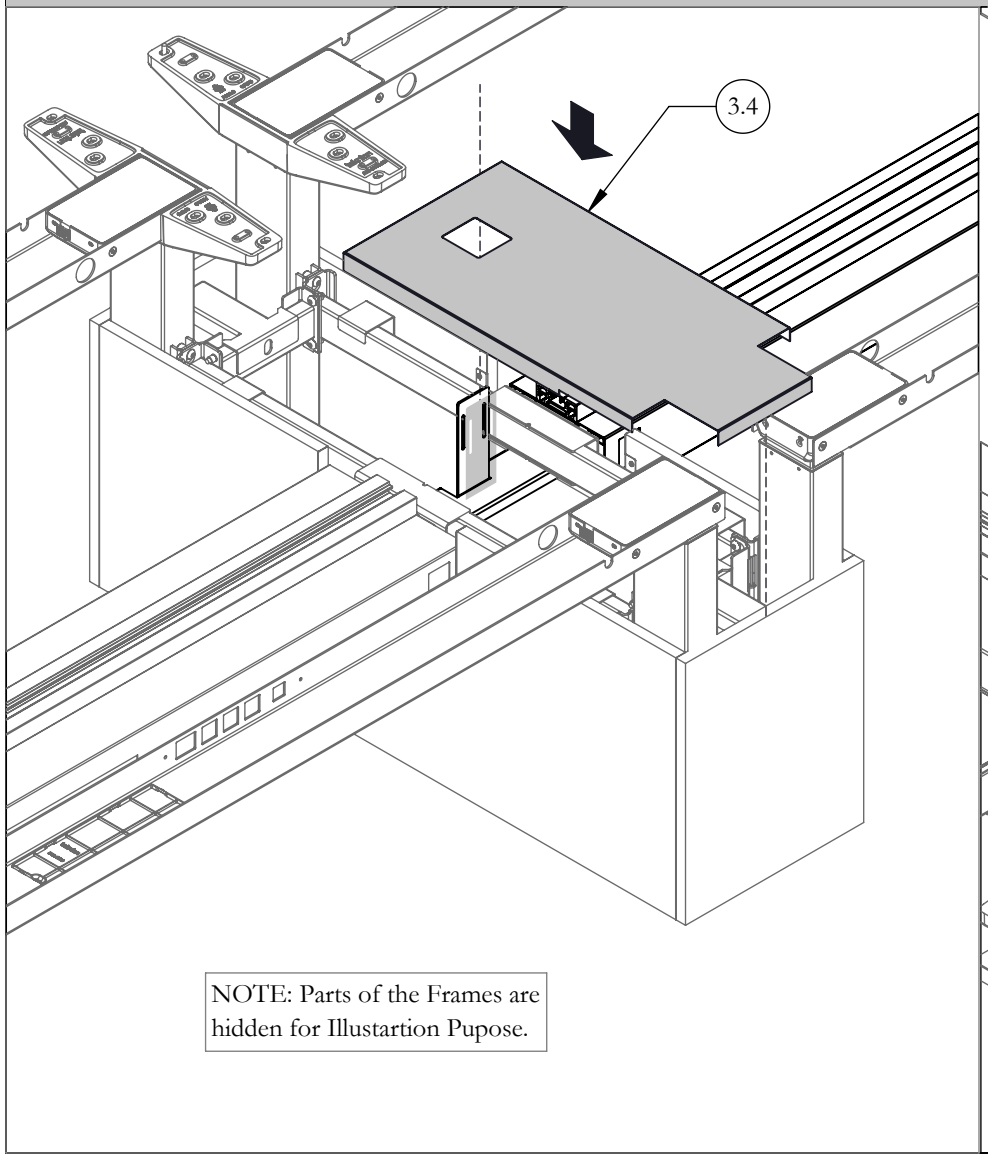

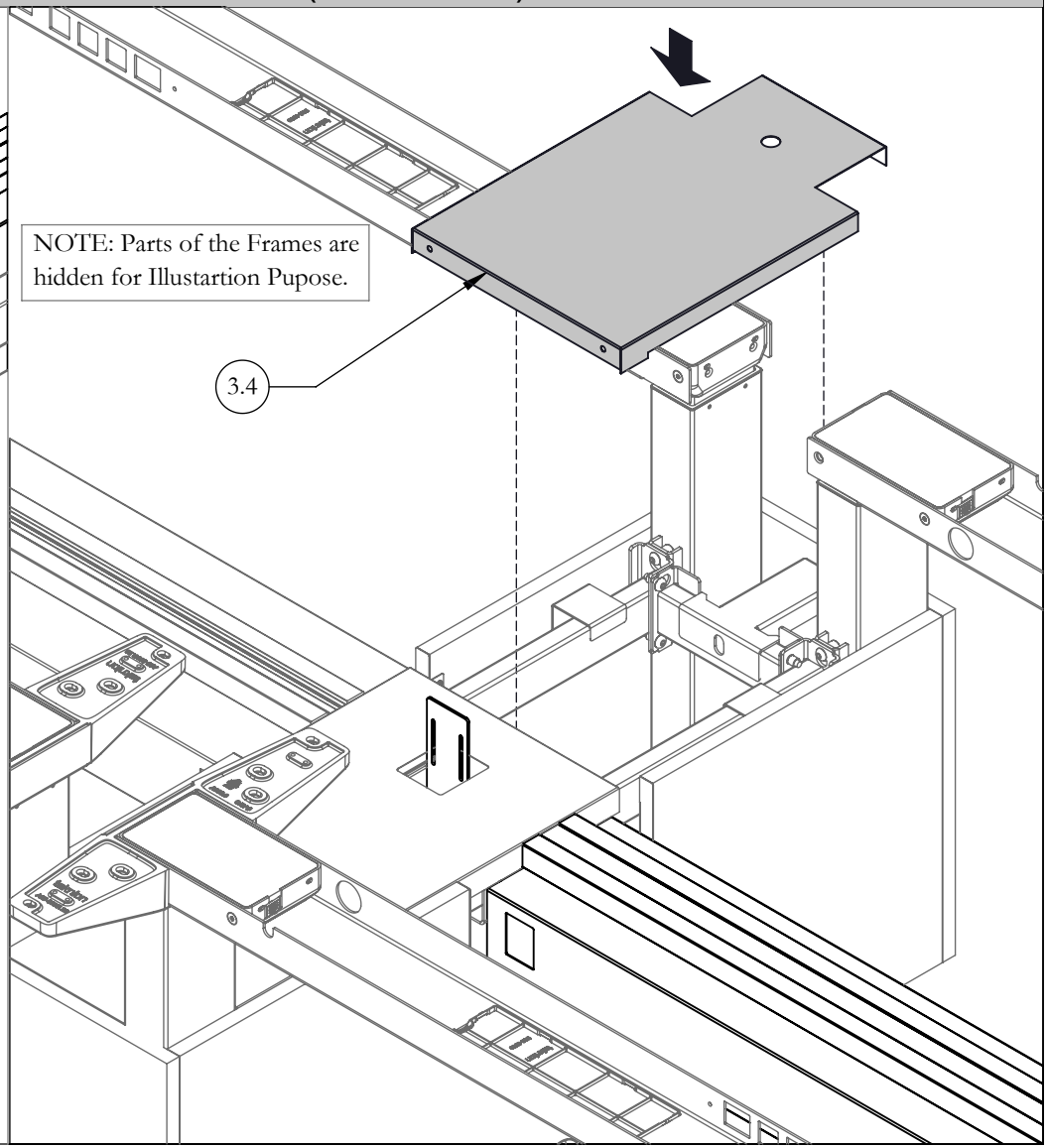

STEP 17a: If Mid Gable Power Pole is specified. Attach Top Covers onto the Highlighted extrusions on the Side and Front Cover assemblies as shown.

Repeat Step 1-15 Install End Gable and Cable Channel on another side of the Table.

ATTACH TOP COVER

NOTE: Parts of the Frames are Hidden for Illustration Purpose.

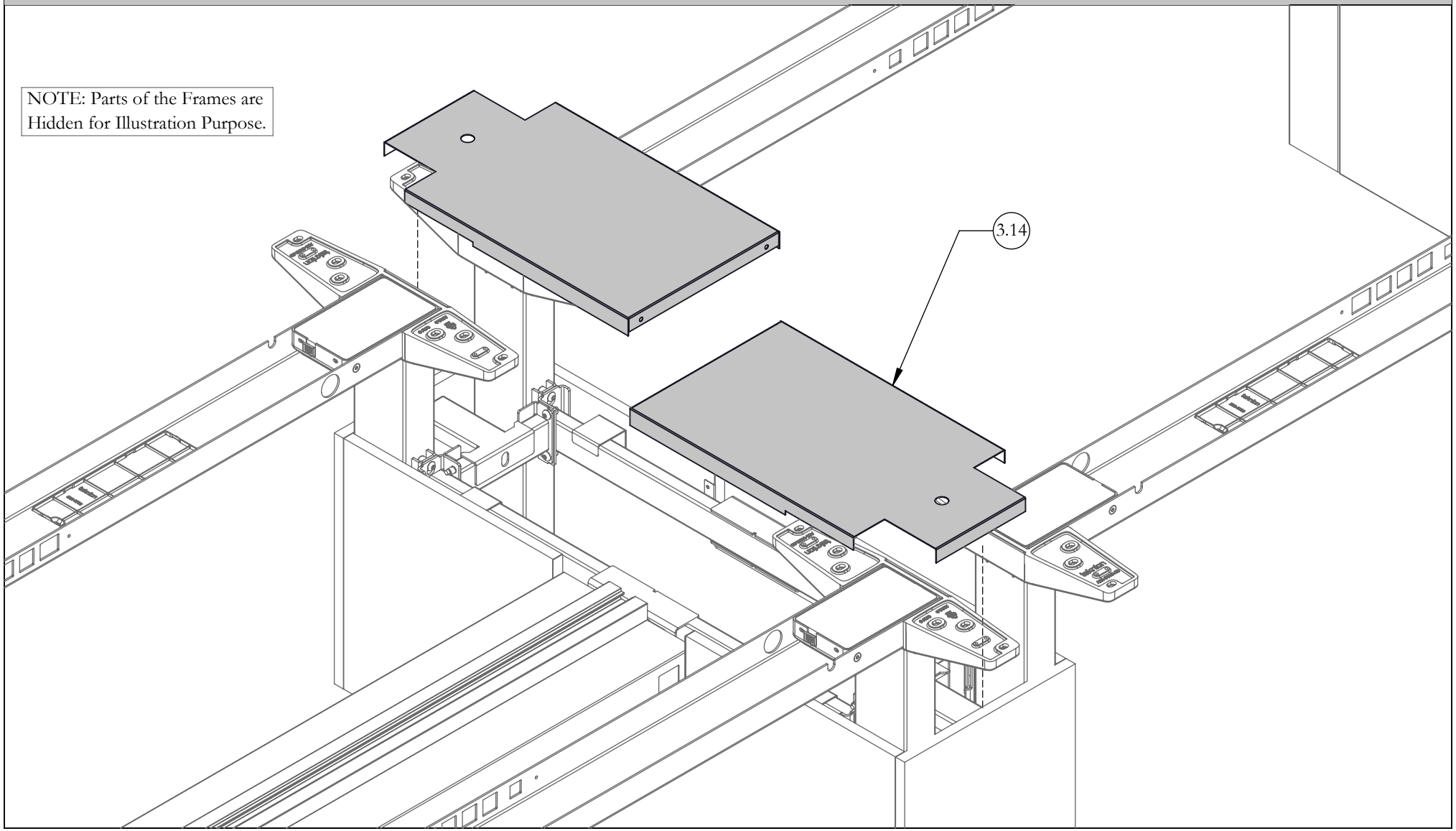

STEP 17b: Rest Top Covers onto Gable structures as Shown.

CENTER RAIL EXTRUSION CAP

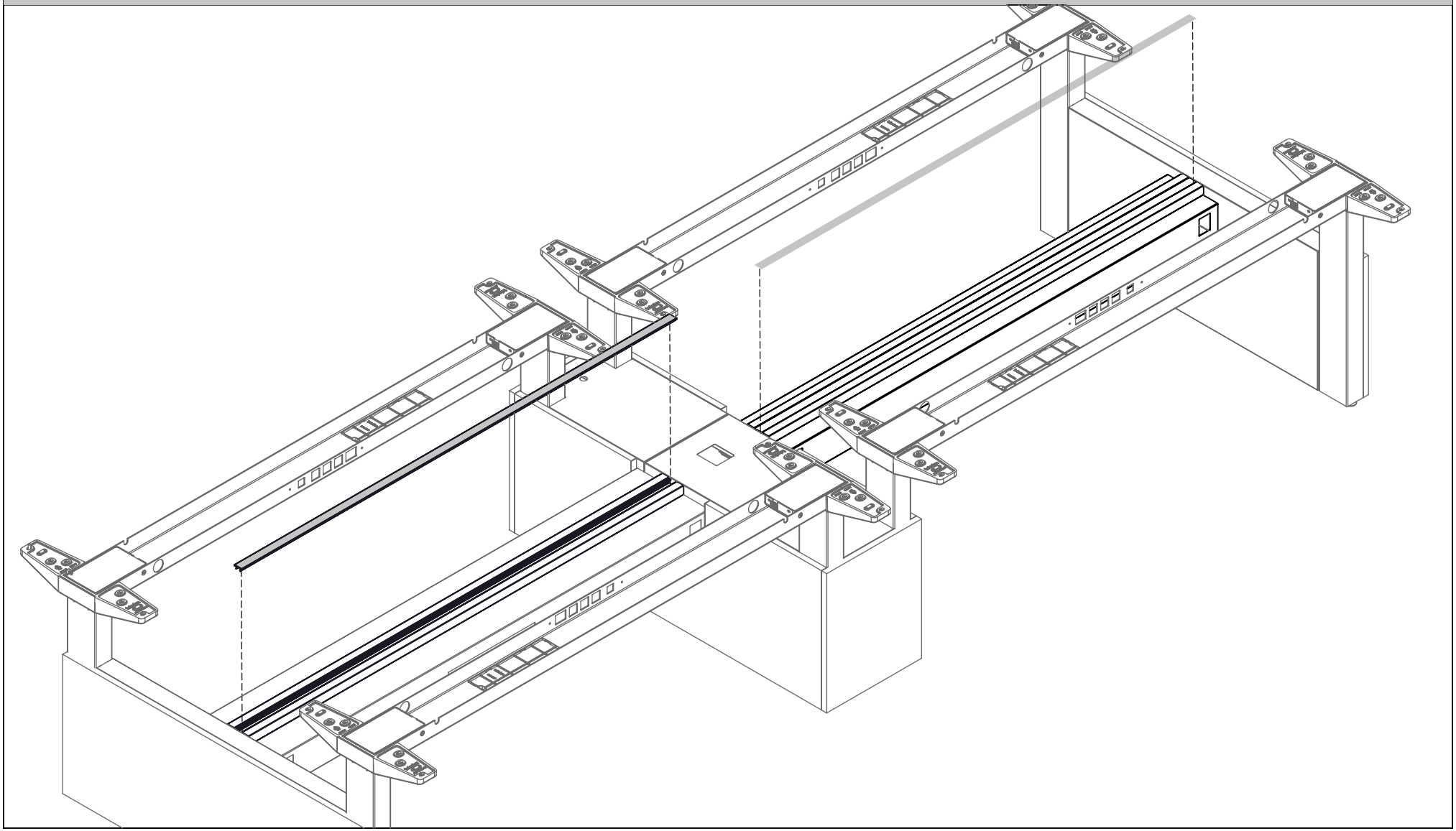

STEP 18: Insert Center Rail Extrusion Caps onto Center Rail Extrusion as Shown.

Navigate End Cover - Metal (HNBCCEMN), Navigate Mid Cover - Metal (HNBCCMMN)

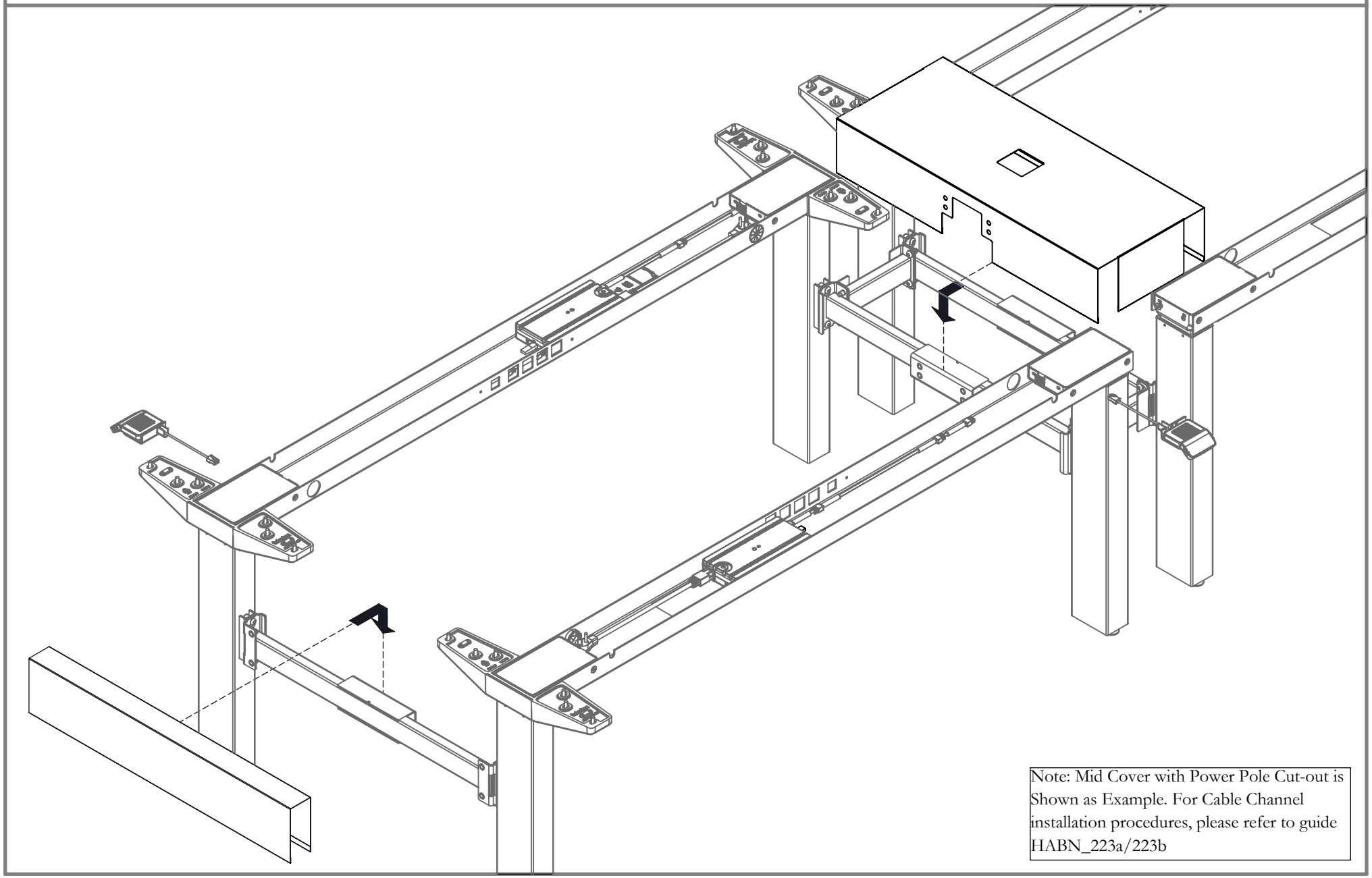

Note: Mid Cover with Power Pole Cut-out is Shown as Example. For Cable Channel installation procedures, please refer to guide HABN_223a/223b

Part & Product Identification

ITEM NO.	PREVIEW	DESCRIPTION	PART NUMBER	QTY.
1	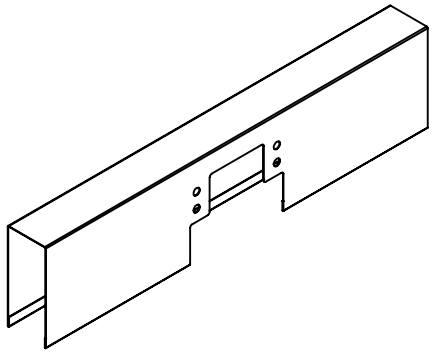	END COVER, DOUBLE SIDED, HAB	A16-7445-X	1
2	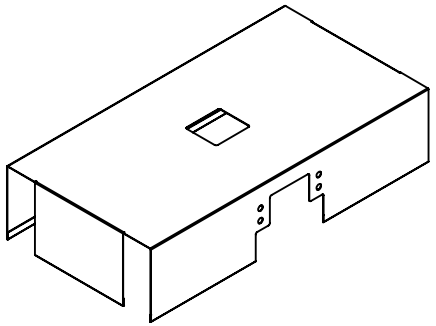	MID COVER, DOUBLE SIDED, HAB	A16-7446-X	1

PLACE END COVER & BRACKET ON FRAME BAR

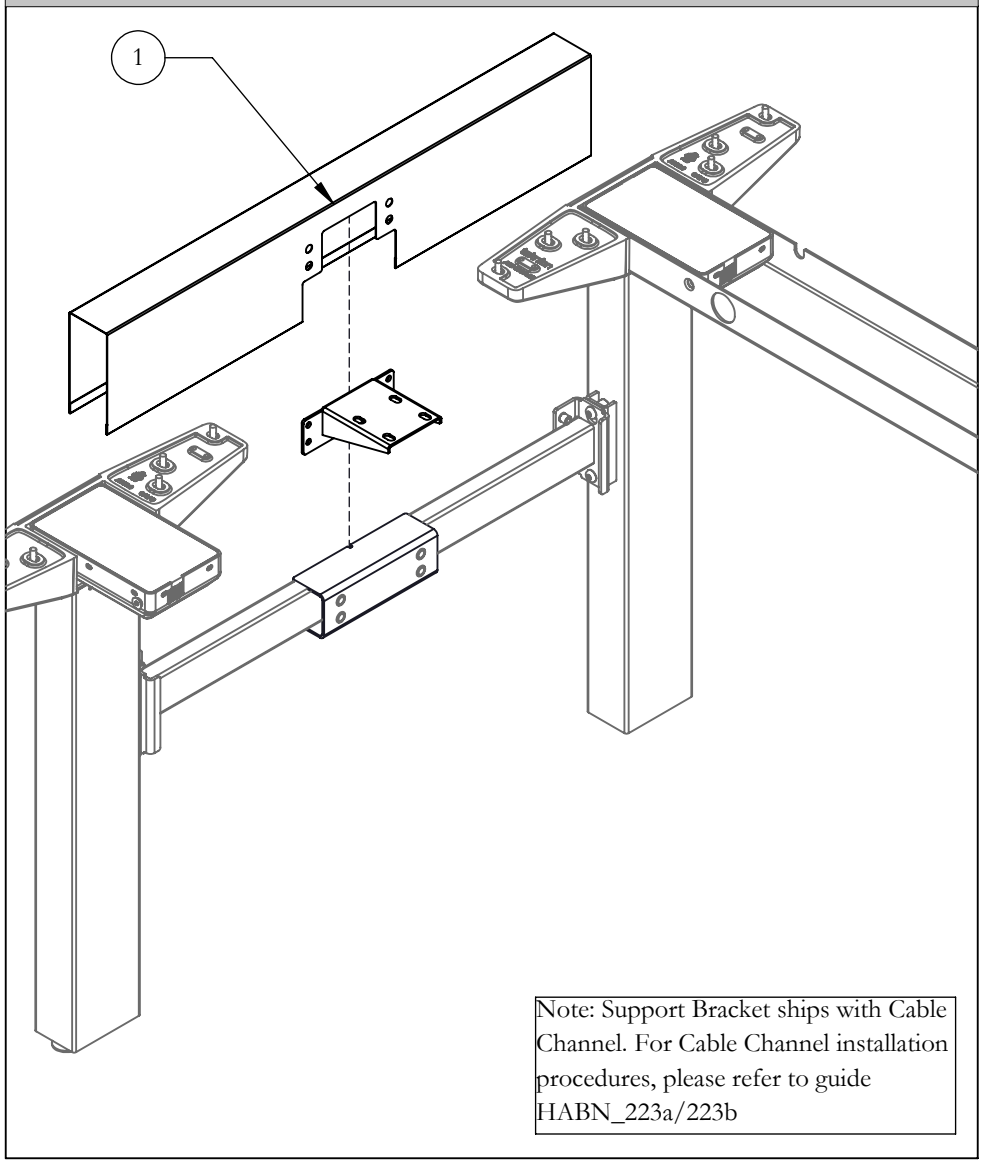

Note: Support Bracket ships with Cable Channel. For Cable Channel installation procedures, please refer to guide HABN_223a/223b

STEP 1: Slide Cable Channel Support Bracket into End Cover, making sure holes align. Bring End Cover and Support Bracket together, and place them on Frame Stretcher Bar

SECURE END COVER IN PLACE

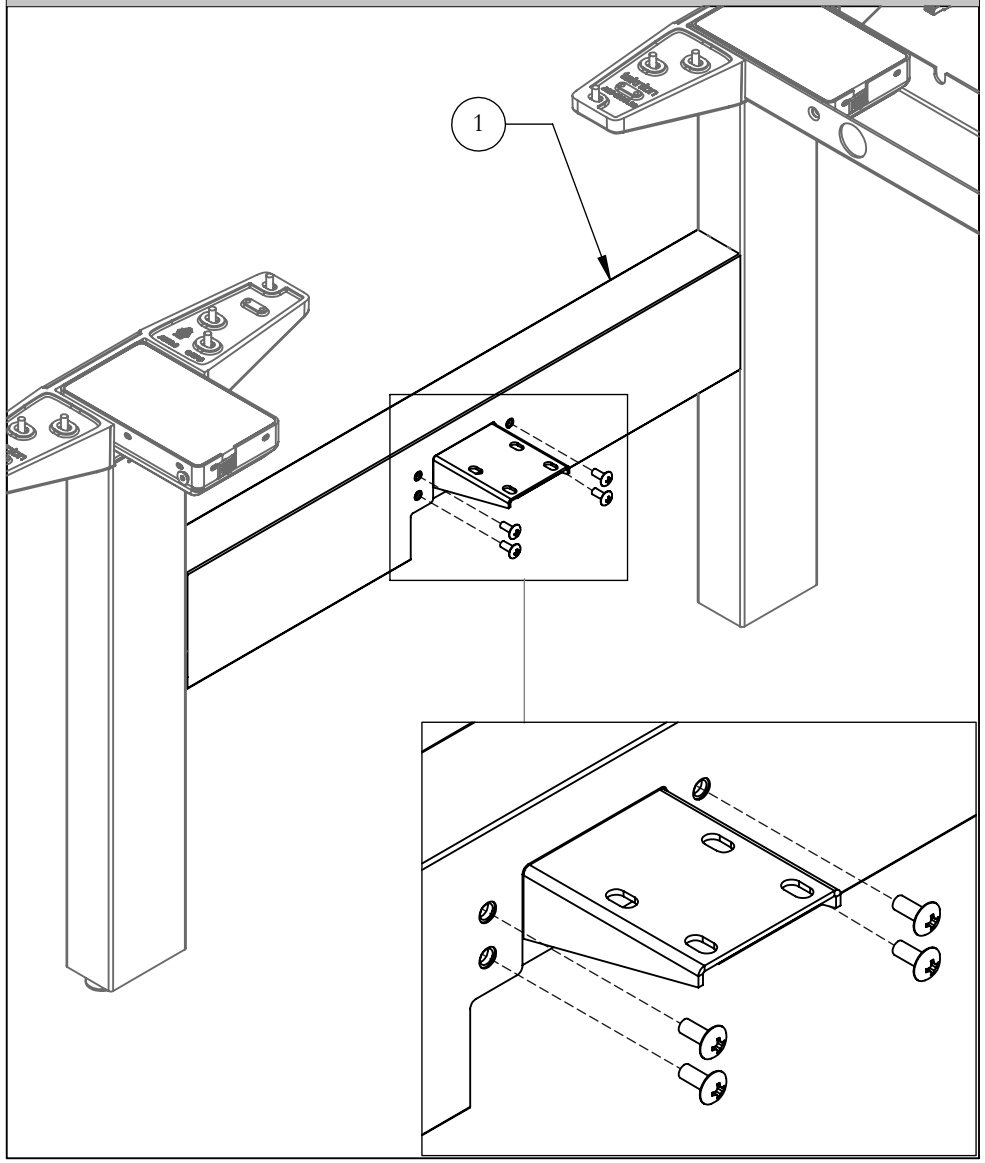

STEP 2: Secure End Cover in place with Support Bracket Screws

PLACE MID COVER ON STRETCHER BARS

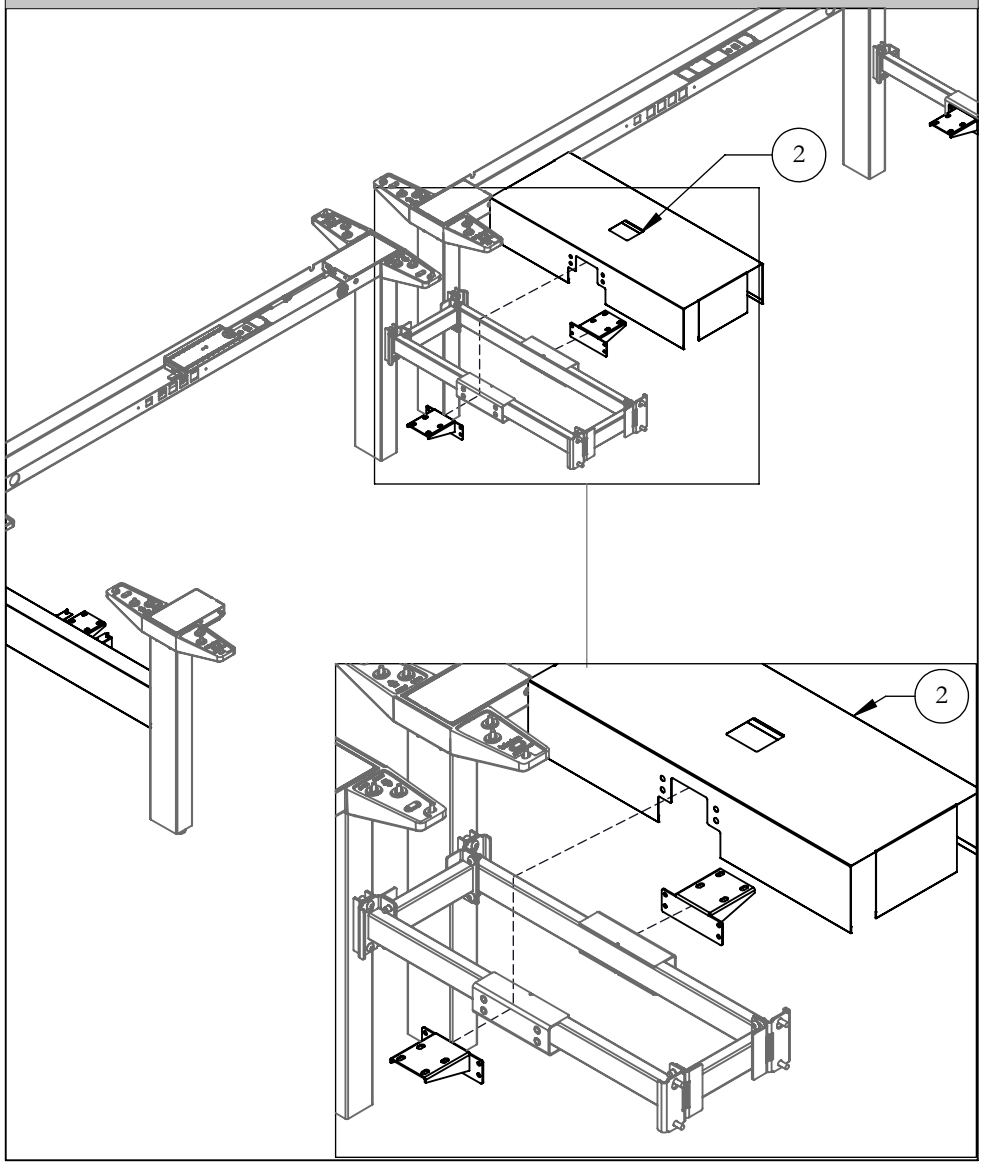

STEP 3: Place Metal Mid Cover on top of Stretcher Bars and Cable Channel Support Brackets.

SECURE MID COVER IN PLACE

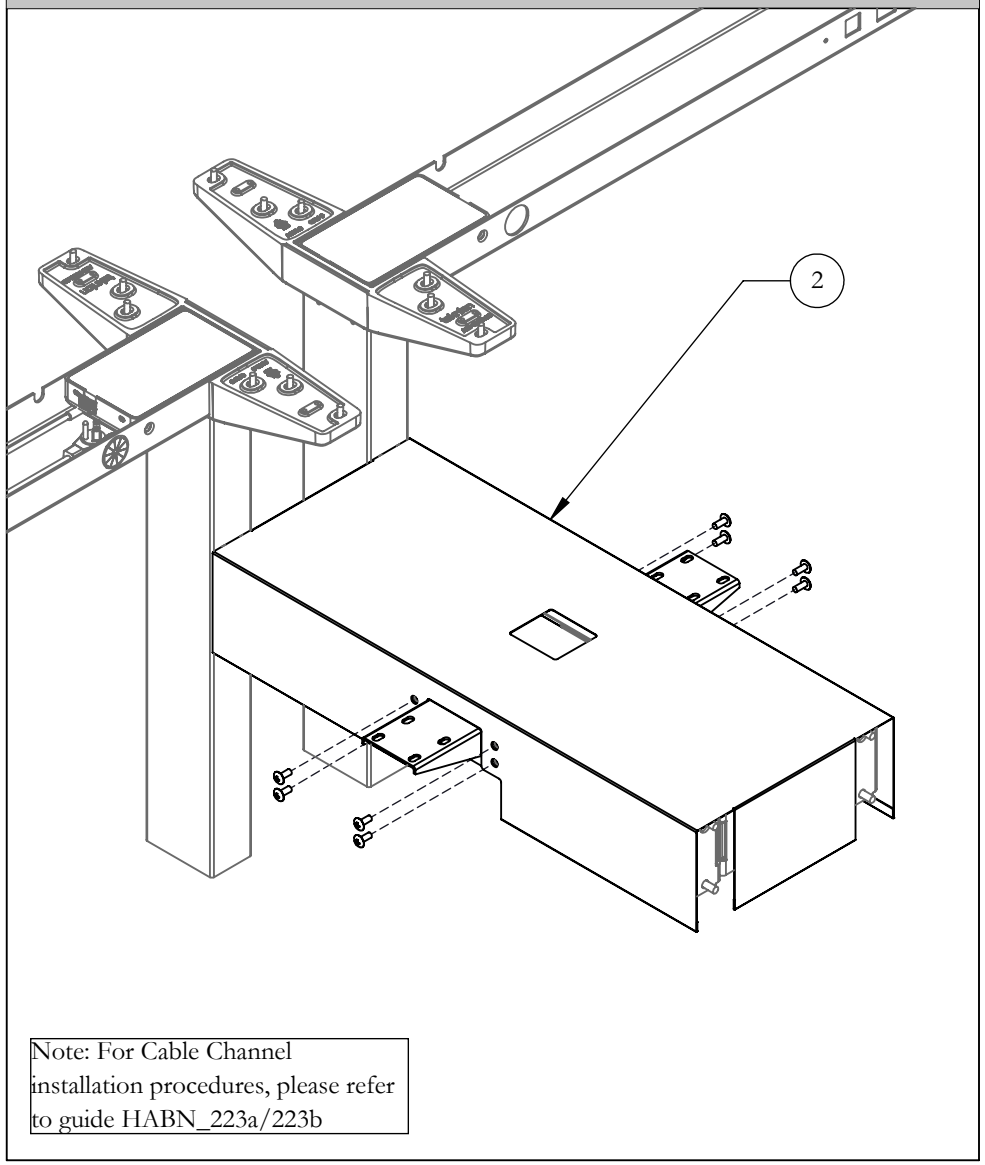

Note: For Cable Channel installation procedures, please refer to guide HABN_223a/223b

STEP 4: Use Screws provided with Support Brackets to secure Metal Mid Cover in place.

Navigate End Screen Cover - Metal (HNBCCSMN), Navigate End of Run Screen (HNBTEF)

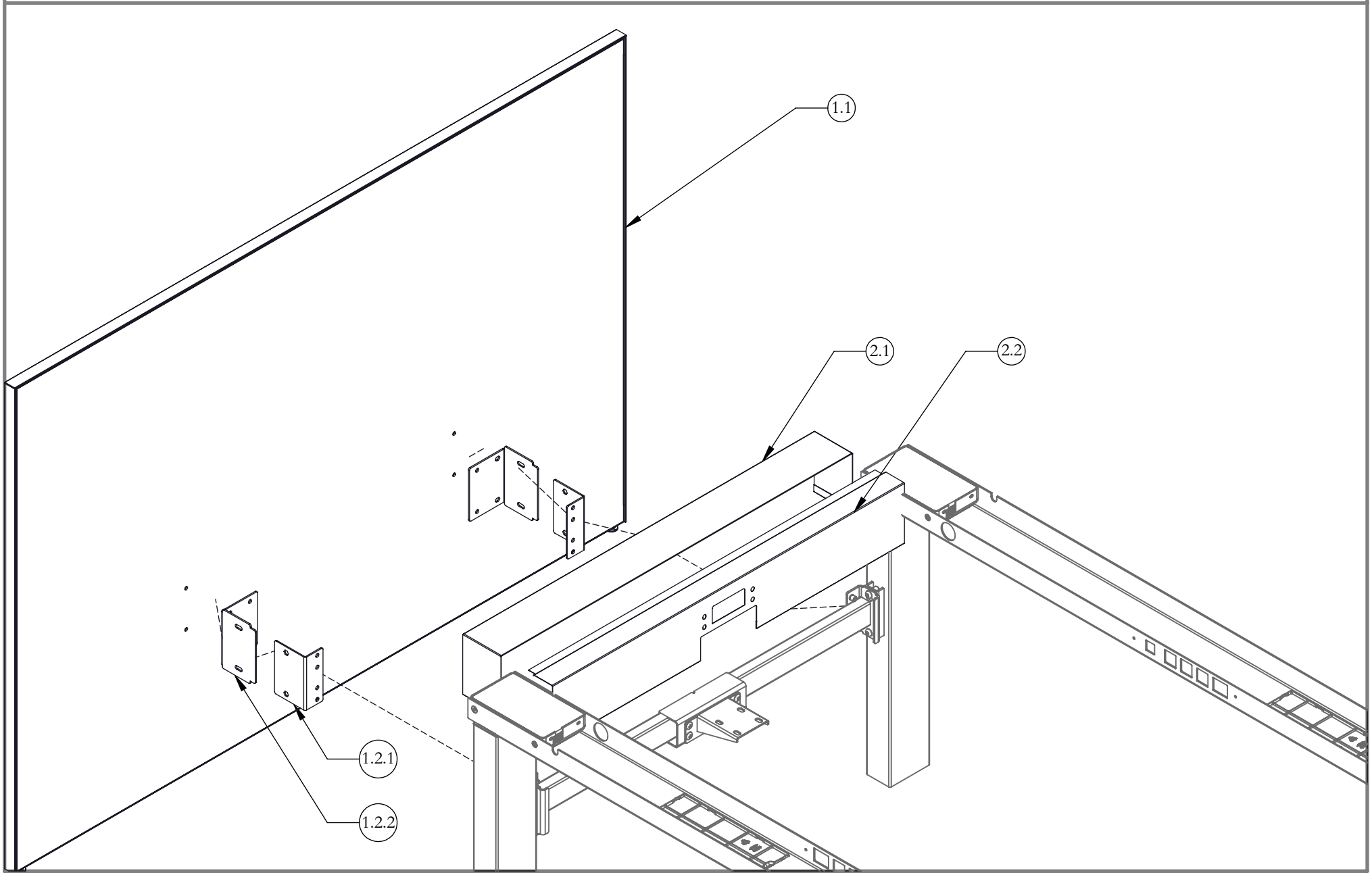

Part & Product Identification

ITEM NO.	PREVIEW	DESCRIPTION	PART NUMBER	QTY.
1. Navigate End of Run Fabric Screen (HNBTEF) x1				
1.1	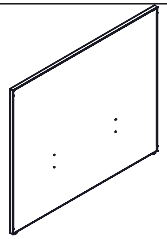	NAVIGATE END OF RUN FABRIC SCREEN	HNBTEF-X	1
1.2. FABRIC END SCREEN MOUNTING BRKT KIT, DOUBLE SIDED, HAB (X06-0620) x1				
1.2.1	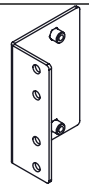	END SCREEN BRKT ASSY, INNER, HAB	N09-9090	2
1.2.2	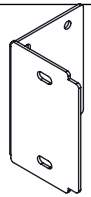	END SCREEN BRKT, OUTER, HAB	A16-7728	2
1.2.3	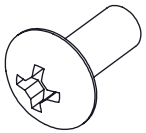	1/4-20X5/8" MACH SCR, BLACK, QUAD,TRUSS	E01-0113	12
2. FABRIC END SCREEN MOUNTING BRKT KIT, DOUBLE SIDED, HAB (X06-0620) x1				
2.1	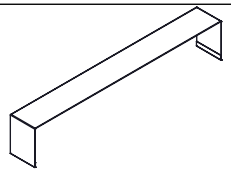	TOP COVER FOR END SCREEN COVER, HNB	A16-7441\72	1
2.2	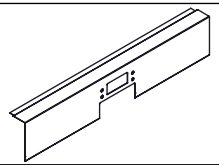	INSIDE COVER FOR END SCREEN COVER, DOUBLE SIDED, HNB	A16-7749\72	1

ATTACH BRACKETS TO SCREEN

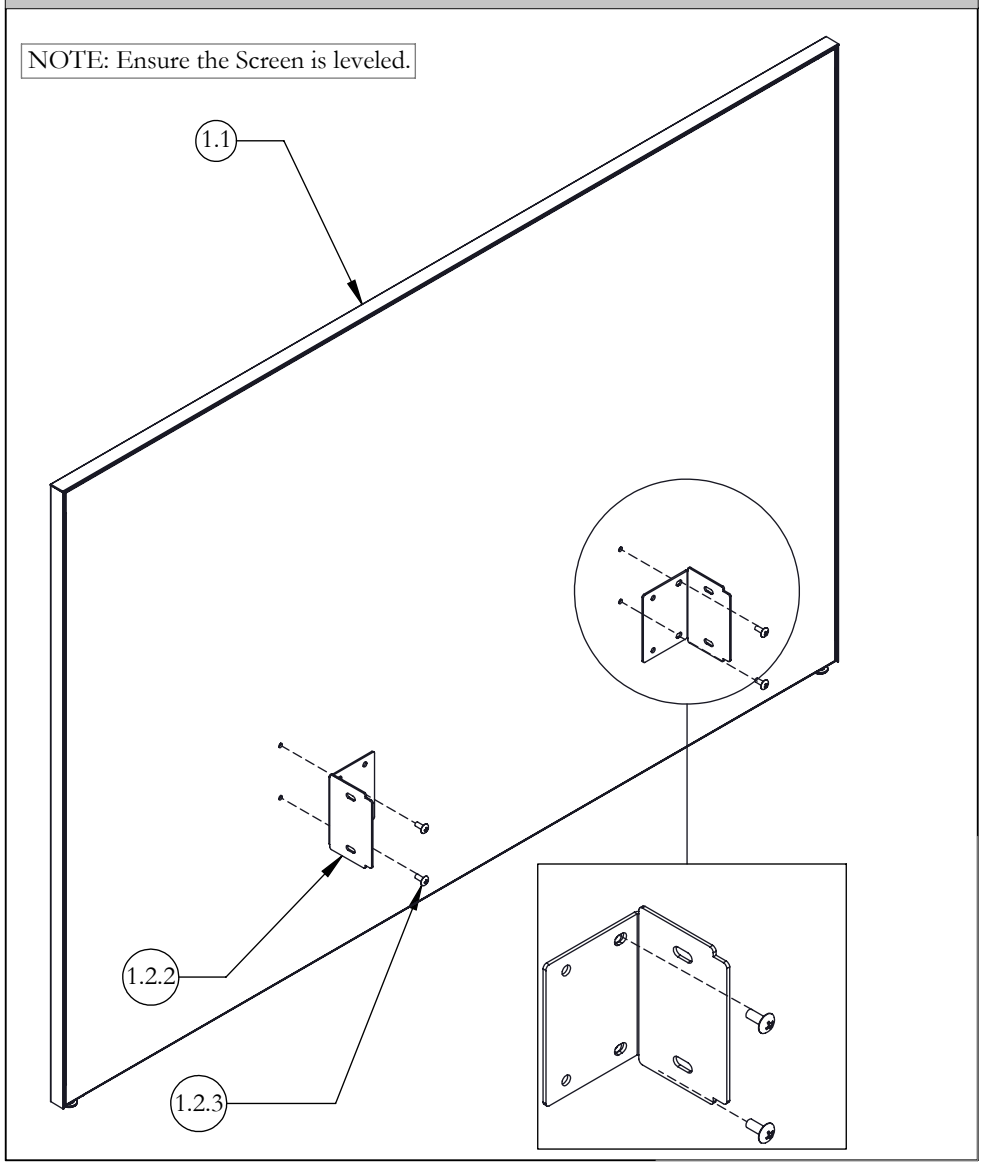

STEP 1: Attach Outer Brackets to Screen using Screws provided.

ATTACH BRACKETS TO FRAME

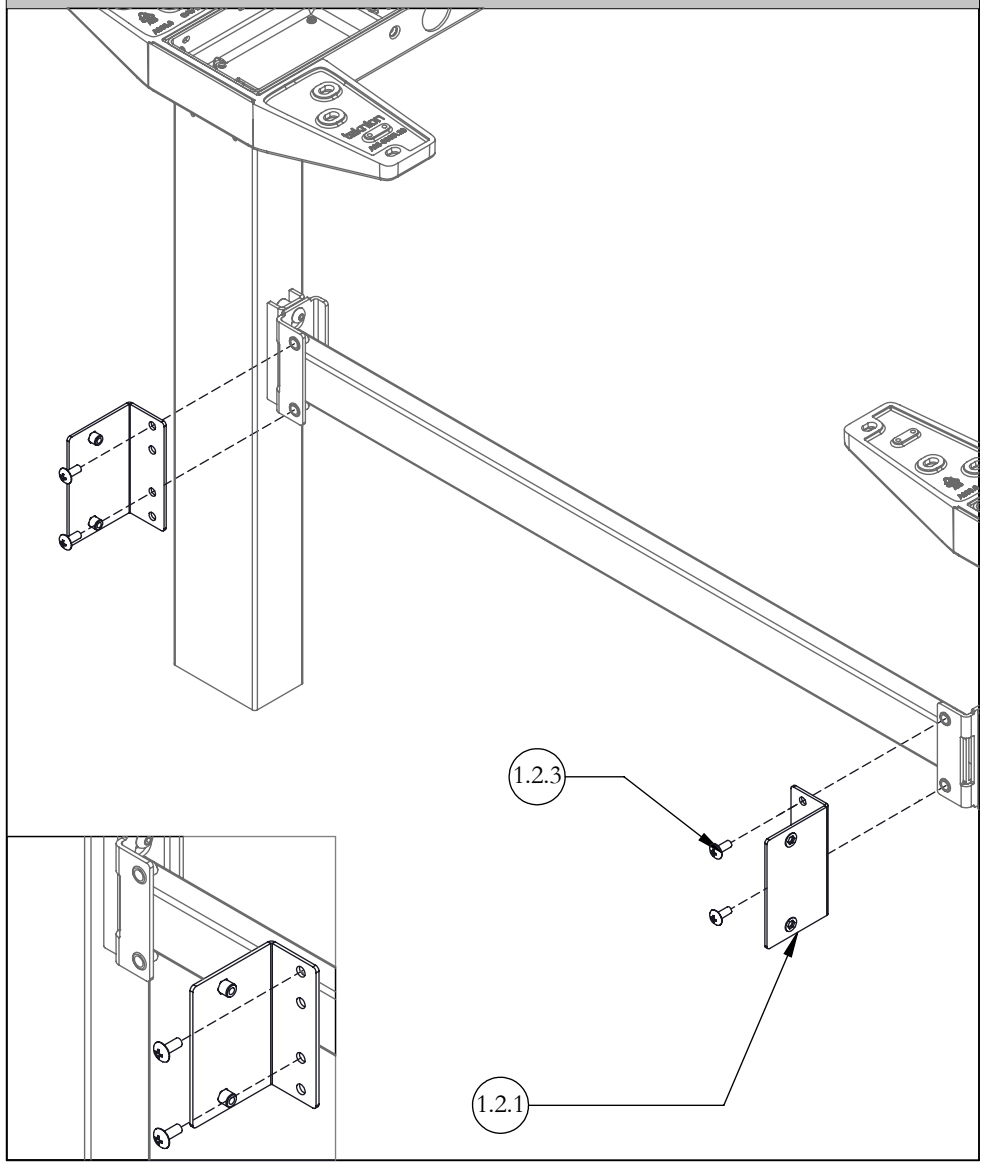

STEP 2: Attach Inner Brackets to Frame using Screws provided.

ATTACH SCREEN TO FRAME

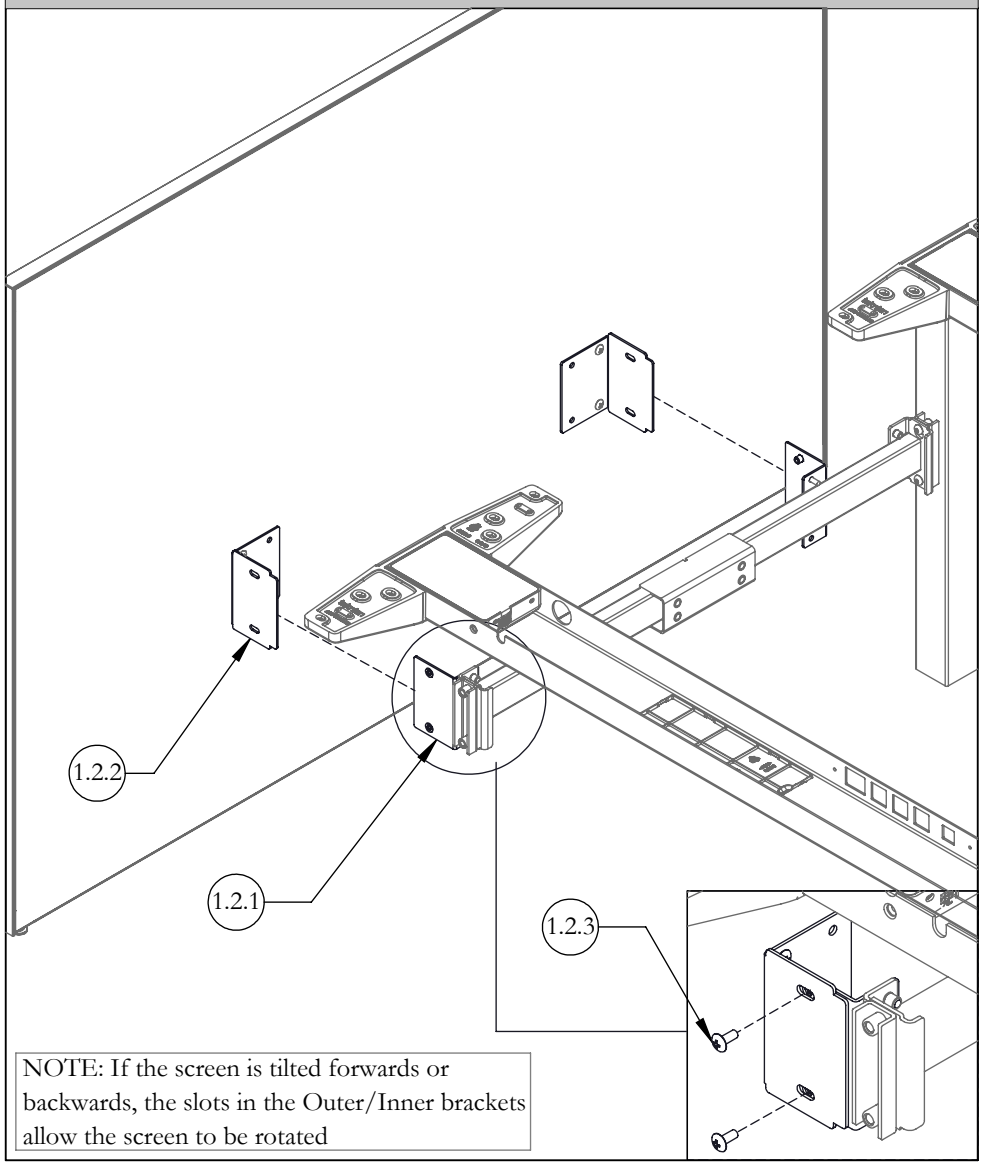

NOTE: If the screen is tilted forwards or backwards, the slots in the Outer/Inner brackets allow the screen to be rotated

STEP 3: Attach End Screen to Frame by first aligning Brackets, and then securing them using Screws provided.

PLACE END COVER & BRACKET ON FRAME BAR

NOTE: Support Bracket ships with Cable Channel. For Cable Channel installation procedures, please refer to guide HABN_223a/223b

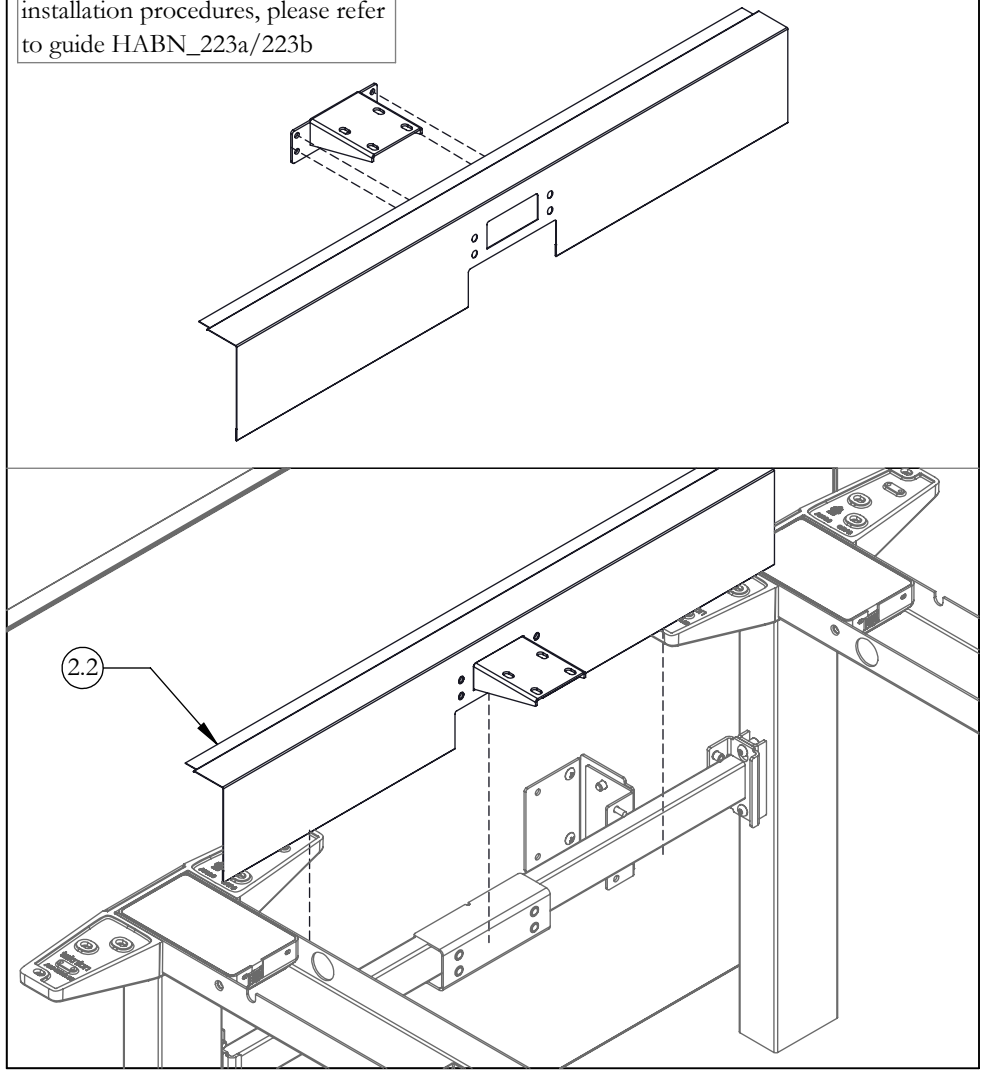

STEP 4: Slide Cable Channel Support Bracket into Inside Cover, making sure holes align. Bring Inside Cover and Support Bracket together, and place them on the Frame Stretched Bar

INSTALL END COVER

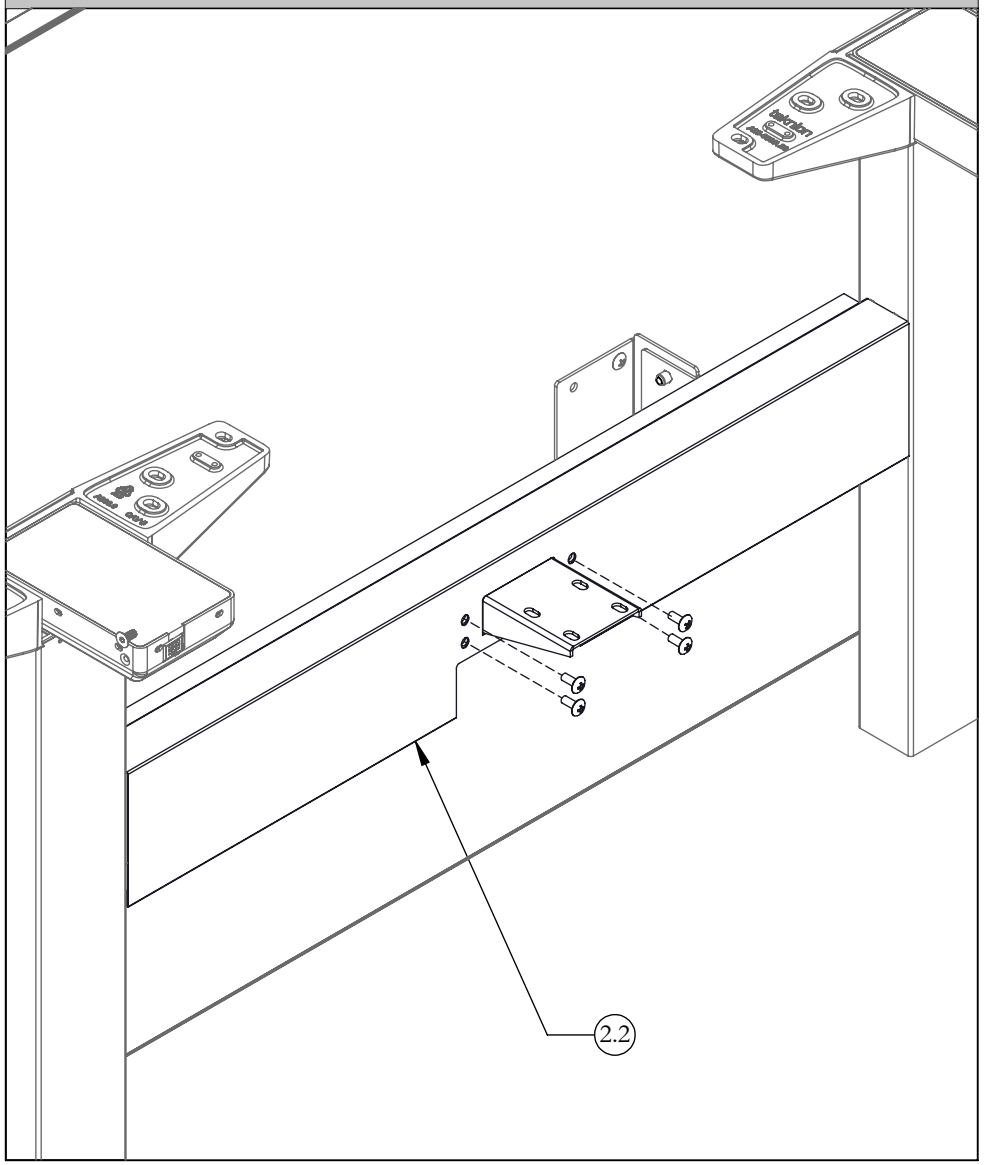

STEP 5: Secure Inside Cover in place using Support Bracket screws

PLACE TOP COVER IN POSITION

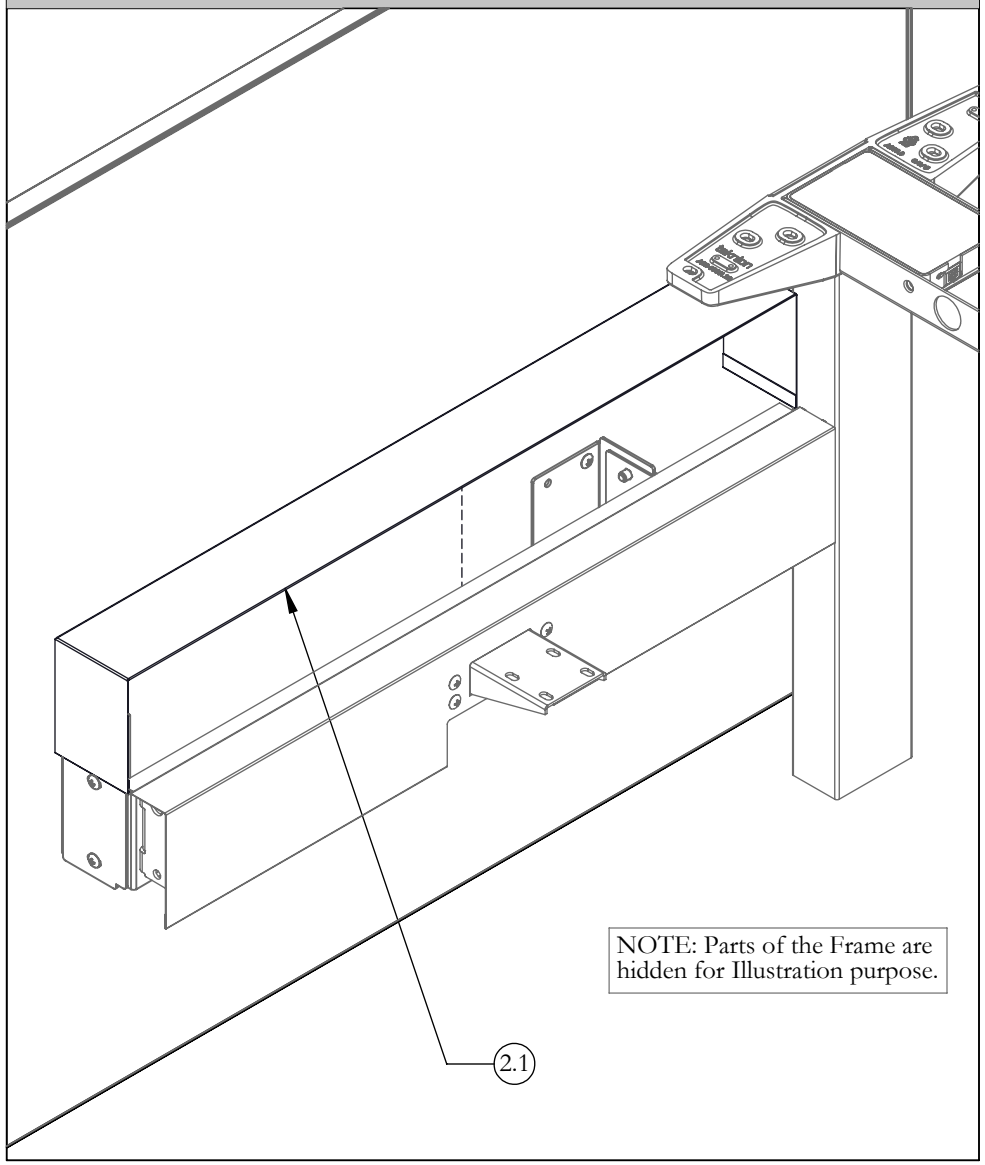

STEP 6: Place Top Cover on top of Inside Cover

Navigate End Screen Gable - Metal (HNBCGSMN), Navigate End of Run Screen (HNBTEF)

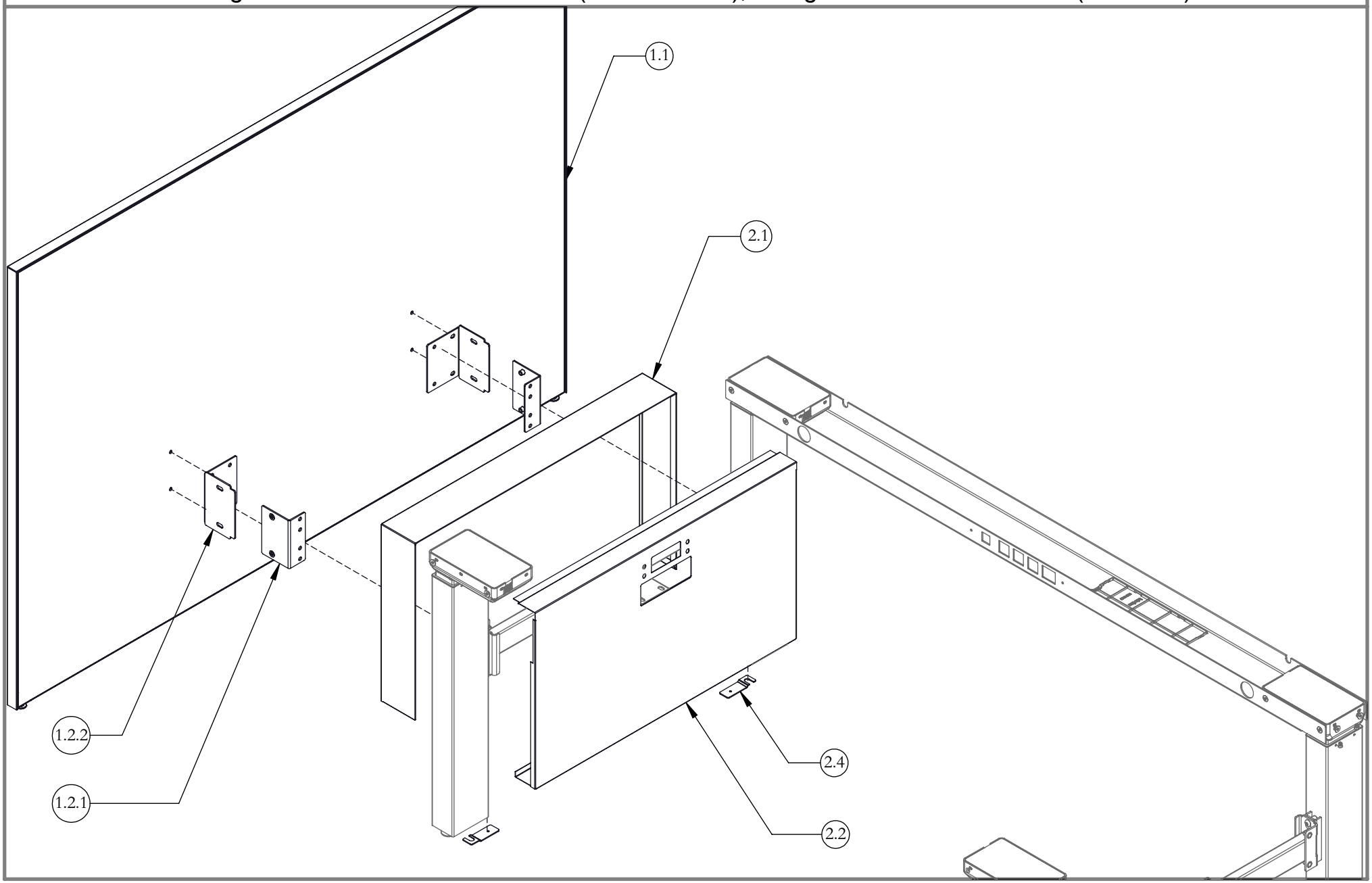

Part & Product Identification

ITEM NO.	PREVIEW	DESCRIPTION	PART NUMBER	QTY.
1. Navigate End of Run Fabric Screen. (HNBTEF) x1				
1.1	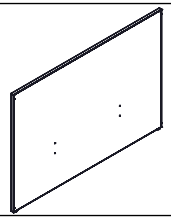	NAVIGATE END OF RUN FABRIC SCREEN	HNBTEF	1
1.2. FABRIC END SCREEN MOUNTING BRKT KIT, DOUBLE SIDED, HAB (X06-0620) x1				
1.2.1	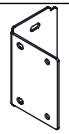	END SCREEN BRKT ASSY, INNER, HAB	N09-9090	2
1.2.2	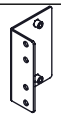	END SCREEN BRKT, OUTER, HAB	A16-7728	2
1.2.3		1/4-20X5/8" MACH SCR, BLACK, QUAD,TRUSS	E01-0113	12
2. NAVIGATE END SCREEN GABLE - METAL (HNBCGSMN) x1				
2.1	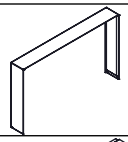	TOP COVER FOR END SCREEN GABLE, HNB	A16-7651-X	1
2.2	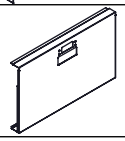	INSIDE COVER ASSY END SCREEN GABLE	N09-9124-X	1
2.3	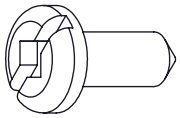	#10X1/2" TAP SCR, QUAD,PAN	E01-0023	2
2.4	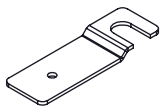	GABEL CONNECTING PLATE	A16-3651	2

ATTACH OUTER BRACKETS TO SCREEN

NOTE: Ensure the Screen is Leveled.

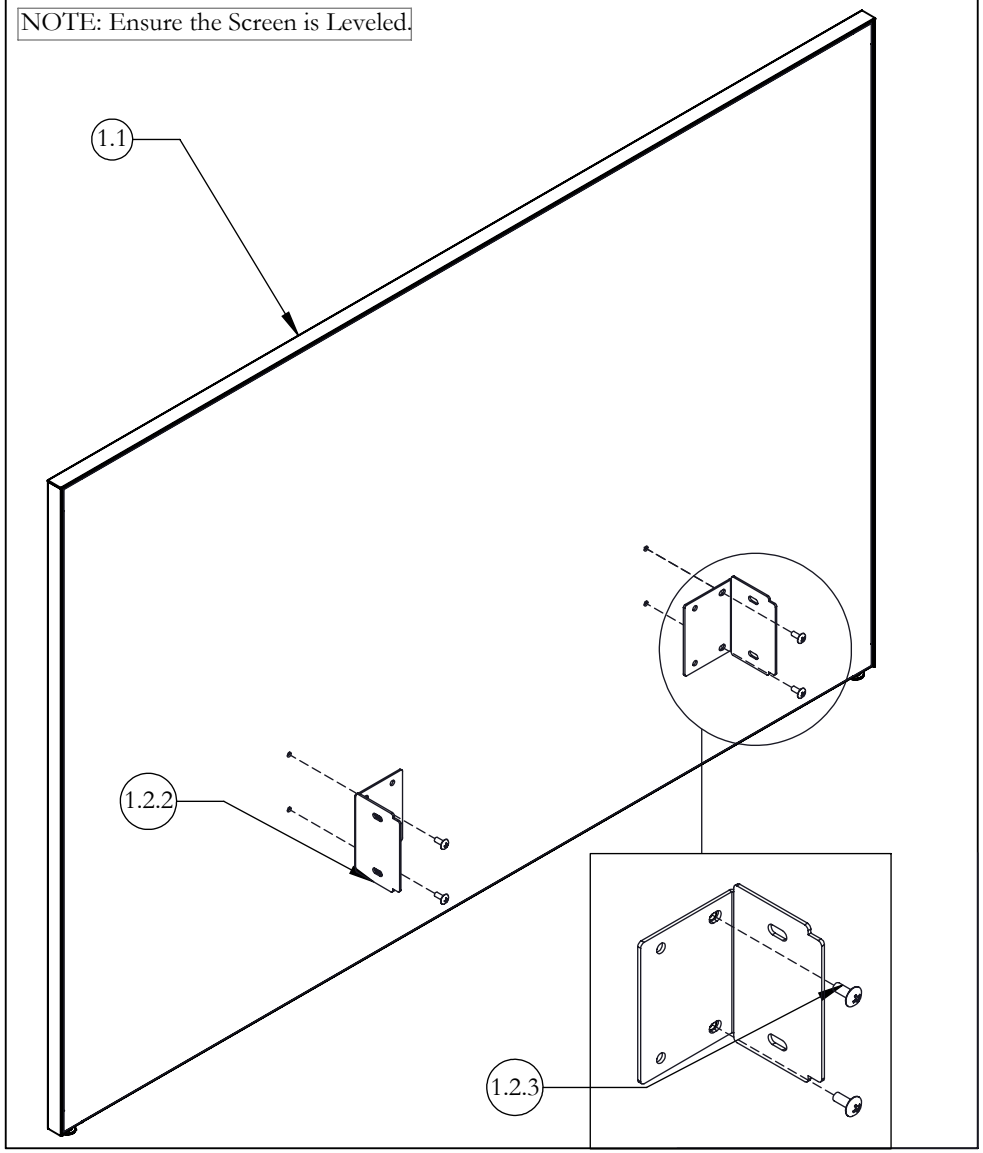

STEP 1: Attach Outer Bracket to End Screen using Screws provided

ATTACH GABLE CONNECTORS TO LEGS

NOTE: Bolts come with the Table Frame.

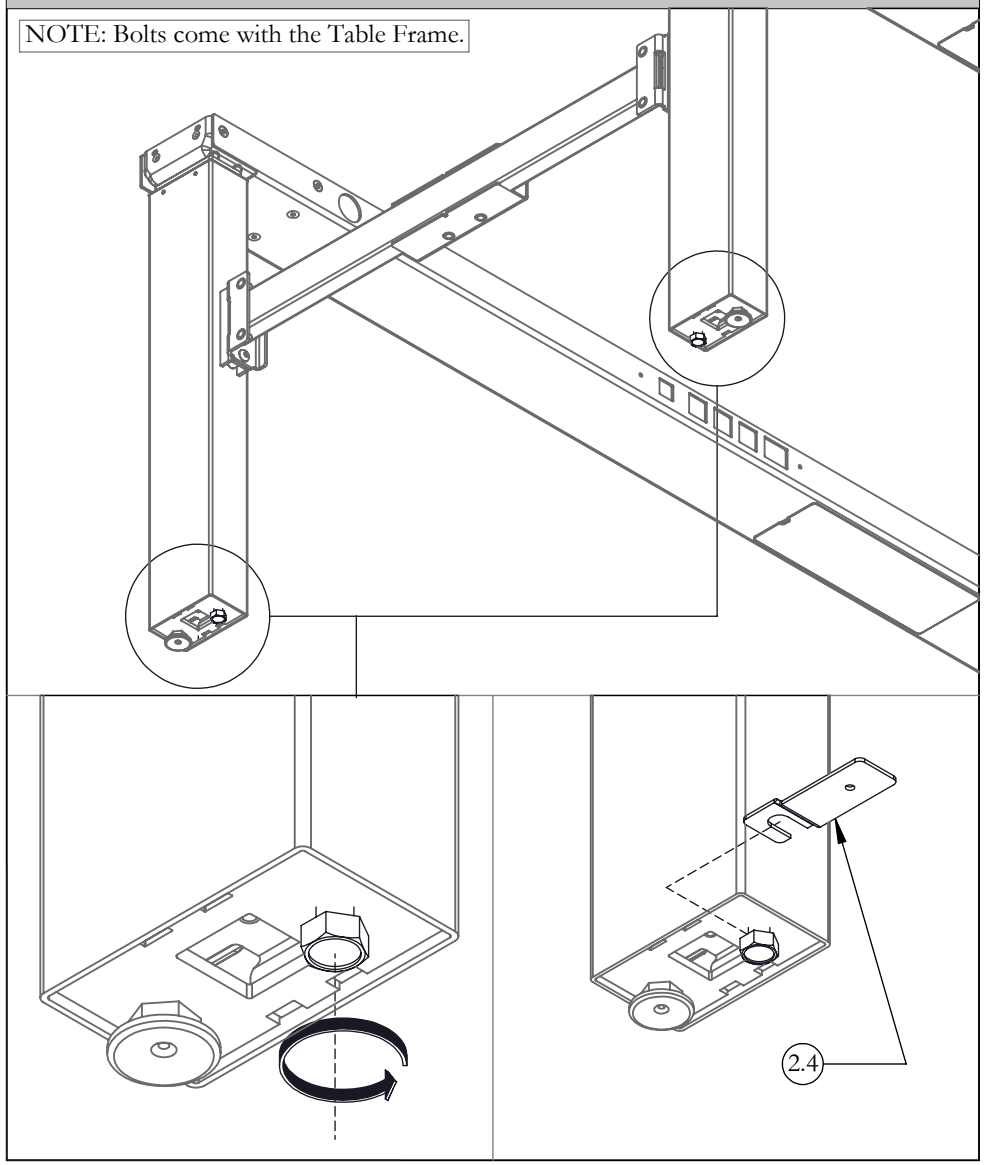

STEP 2: Loosen Bolts that come with the Table Frame, and slide Gable Connector to underside of legs.

LINE UP INSIDE COVER AND BRACKET

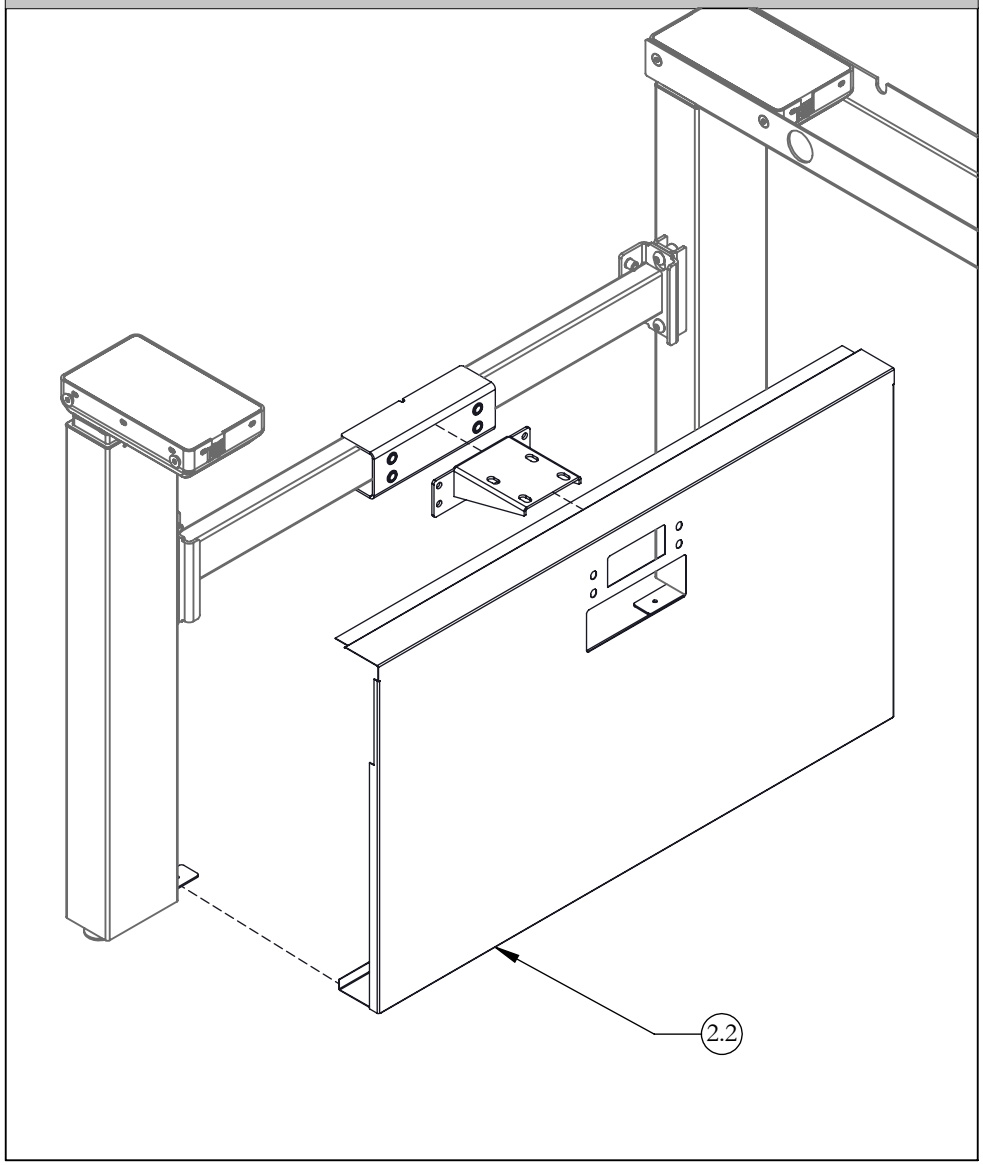

STEP 3: Line up the Cable Channel Bracket with the Inside Cover, and place against the horizontal frame

SECURE INSIDE COVER TO CONNECTOR

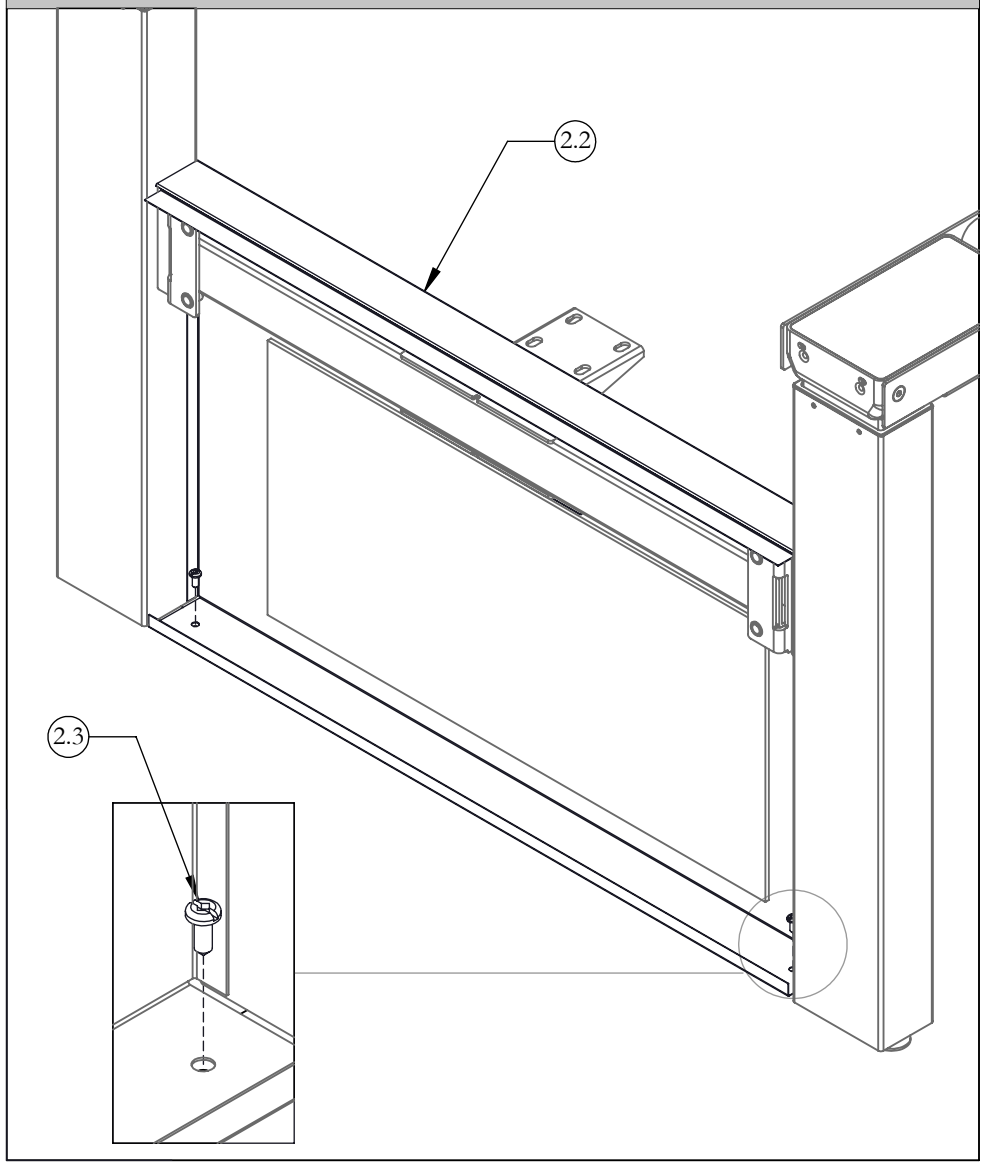

STEP 4: Use Screws provided to secure the Inside Cover to the Gable Connector

SCREW COVER TO BRACKET

NOTE: Support Bracket ships with Cable Channel. For Cable Channel installation procedures, please refer to guide HABN_223a/223b

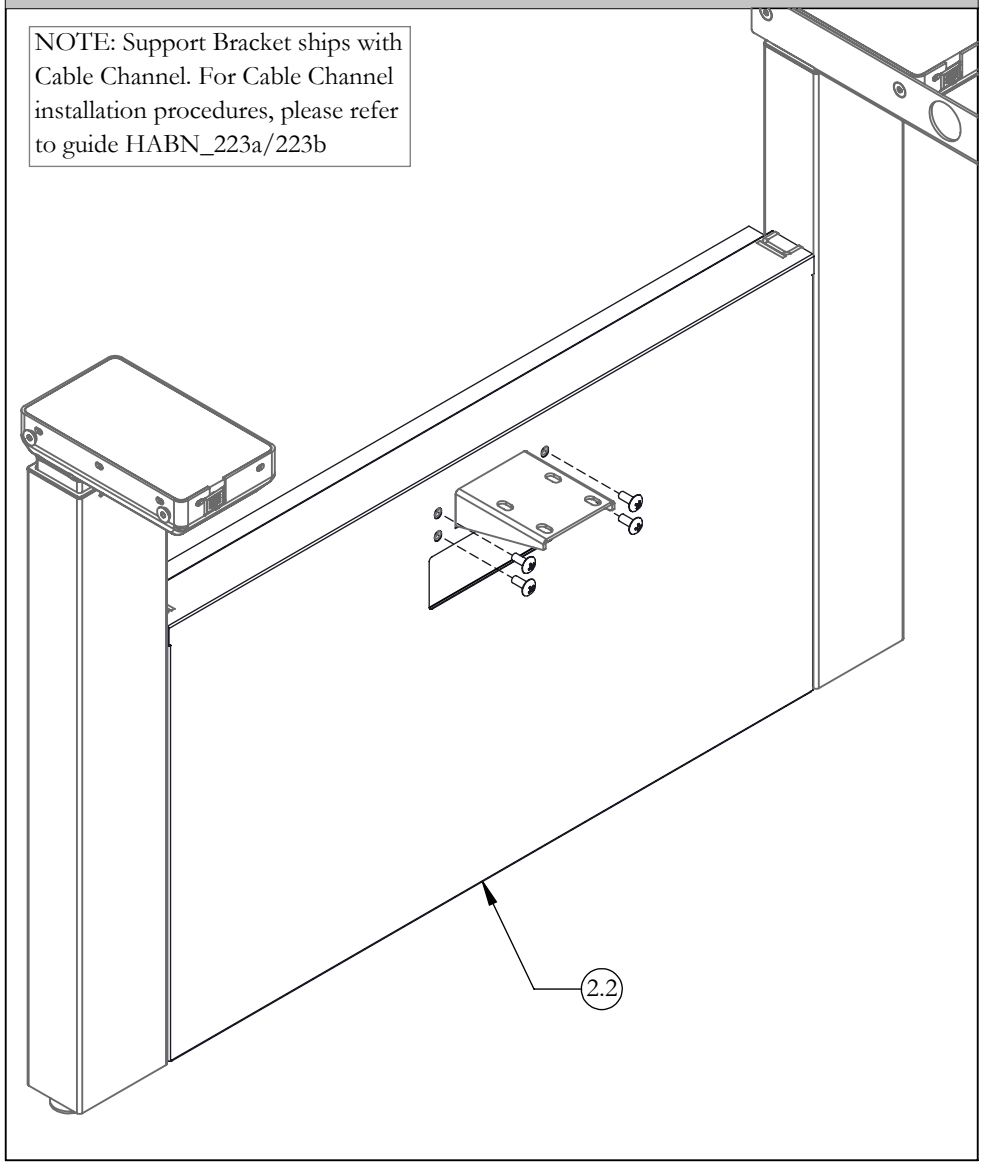

STEP 5: Screw the Inside Cover to the bracket using the Screws provided in the Cable Channel

ATTACH BRACKETS TO FRAME

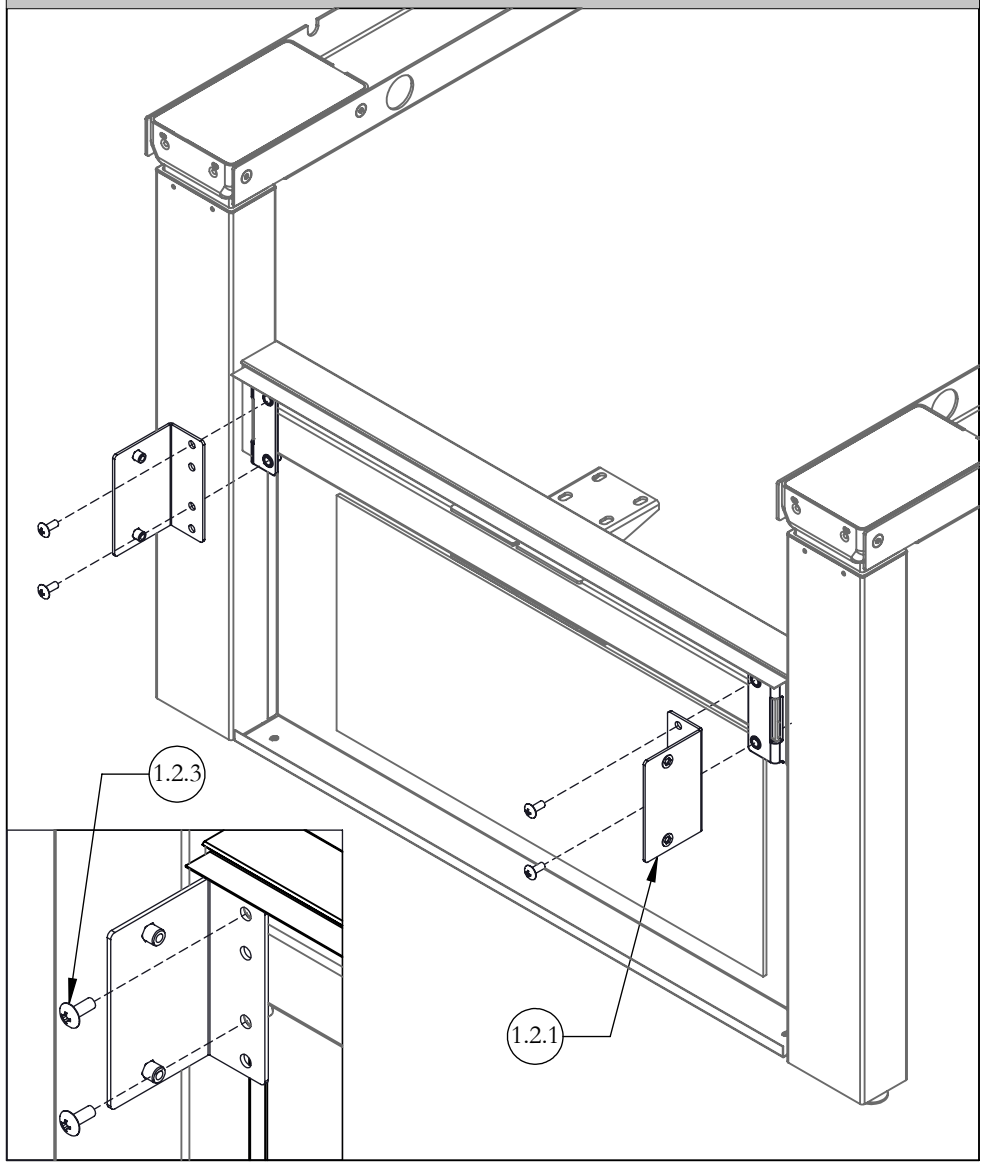

STEP 6: Secure Inner Bracket to frame using the Screws provided.

ATTACH END SCREEN TO FRAME

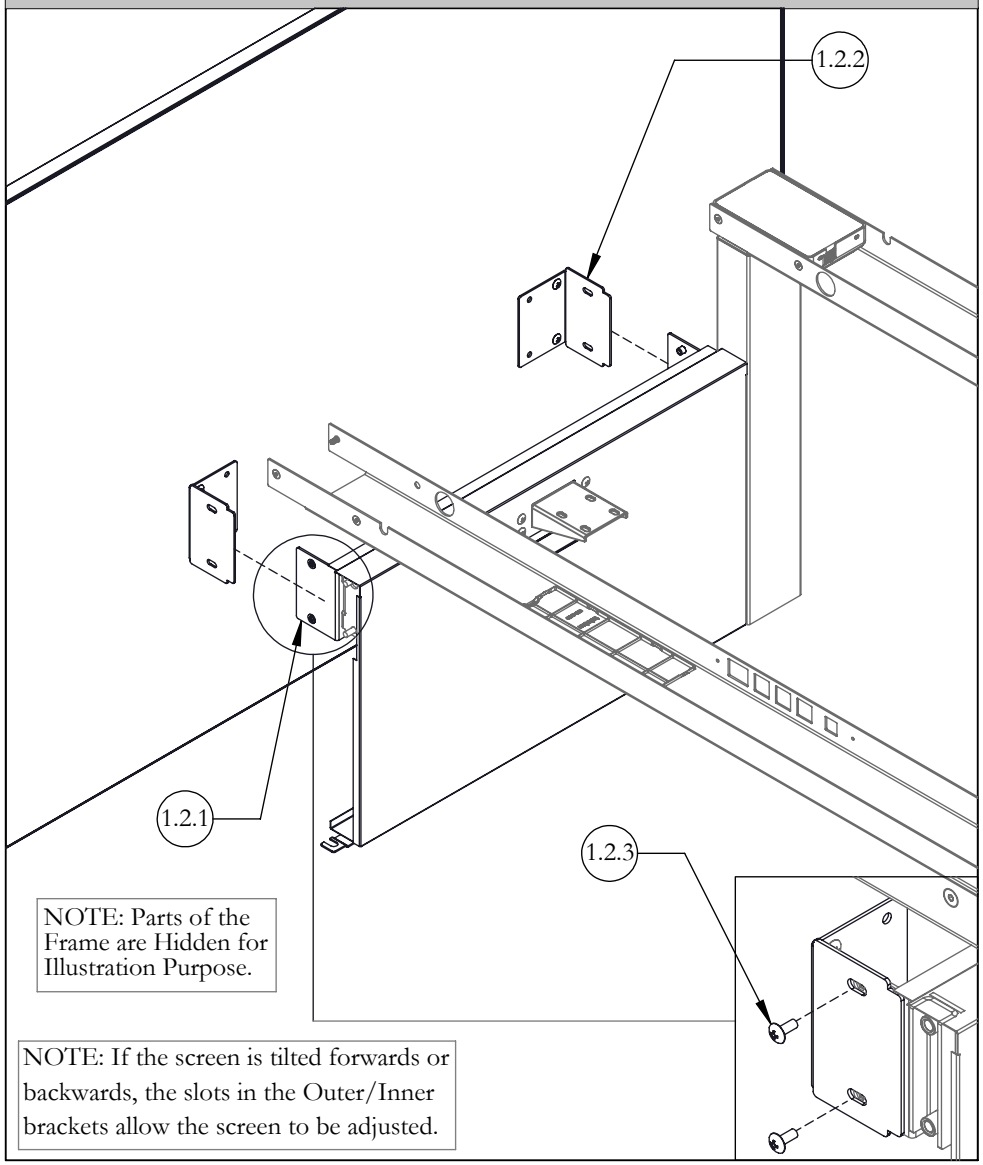

STEP 7: Attach the End Screen to the frame using the screws provided.

PLACE TOP COVER ON FRAME

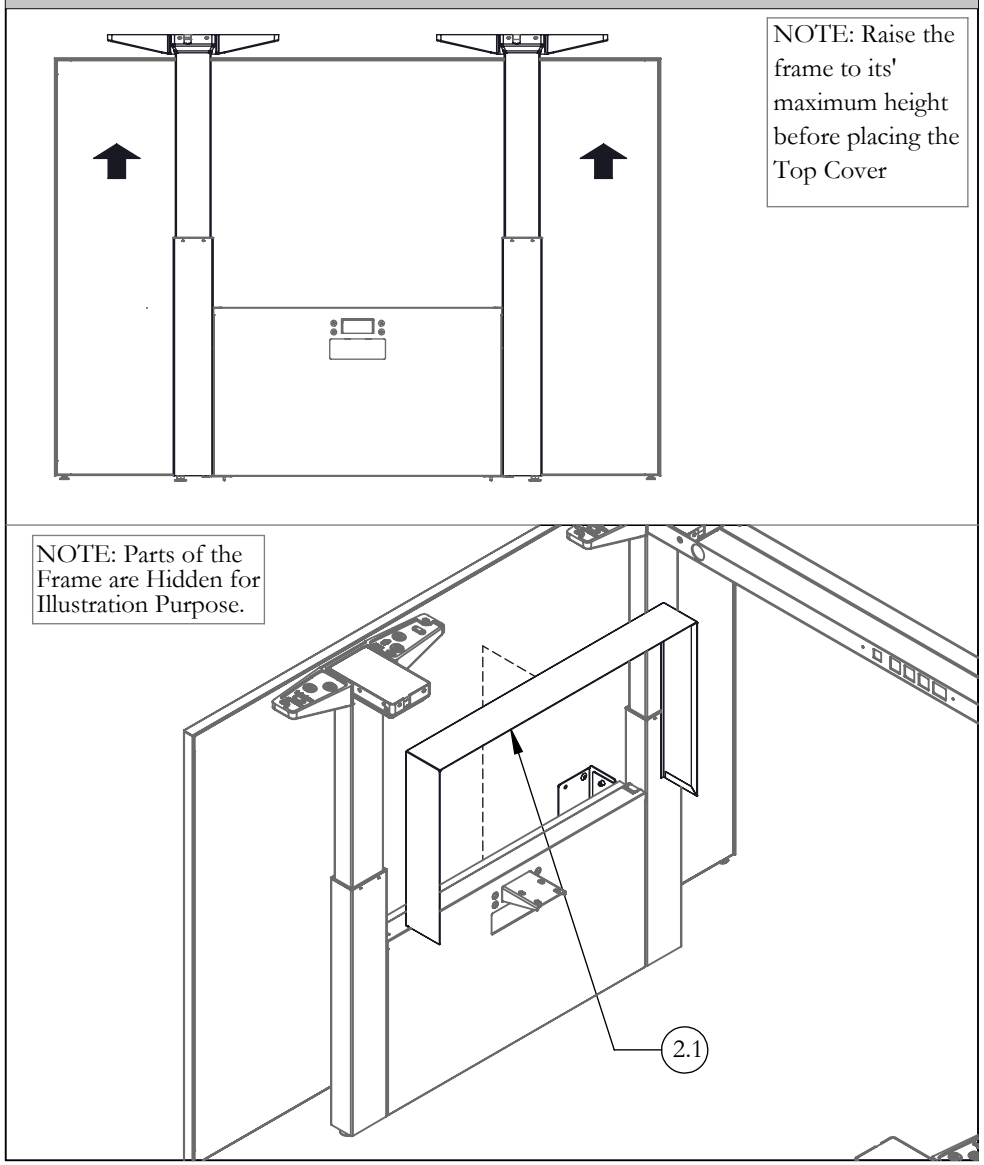

STEP 8: Raise the height of the frame, then place the Top Cover of the gable on top of the assembly

Navigate Wire Channel, Single Sided (HNBFCNS)

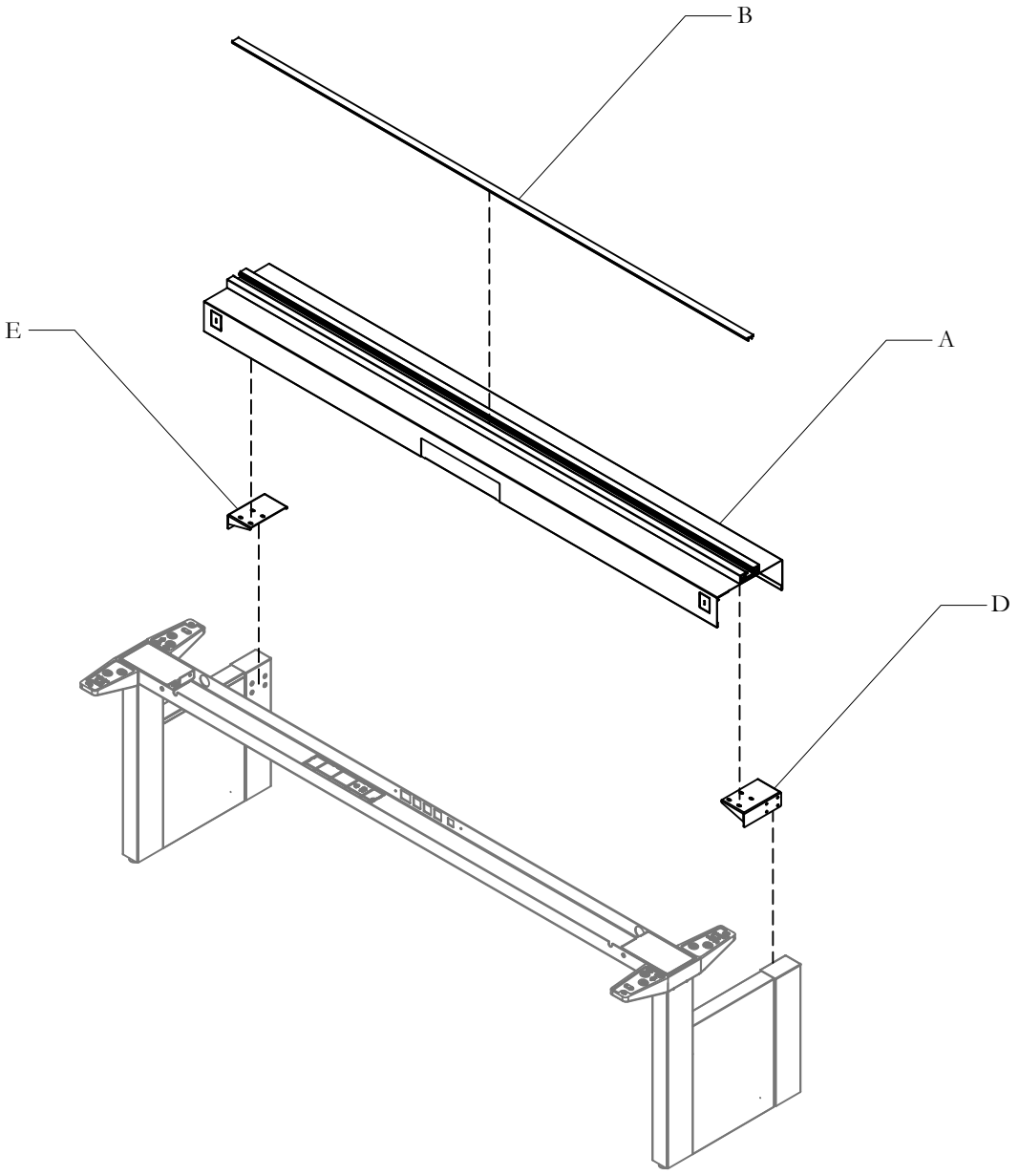

Part and Product Identification

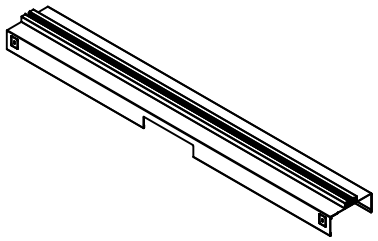

A - Wire Channel, Single Sided
(N09-8570) x1

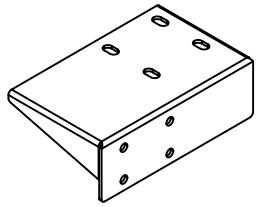

E - Support Bracket - Screen Rail, Single Sided
(A16-7245L) x1

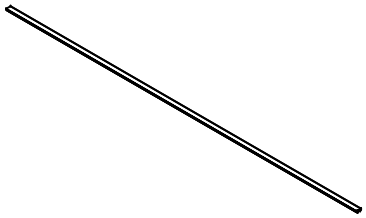

B - Center Rail Extrusion Cap Cut Length
(A23-5200) x1

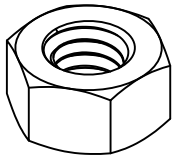

F - 5/16 - 18 Hex Nut, 1/2 A/F, 0.265 THK
(E01-0755) x8

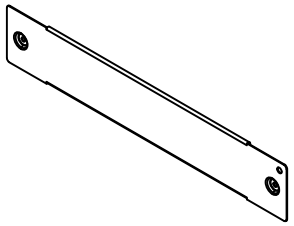

C - Access Door Navigate Wire Channel
(N01-4420) x1

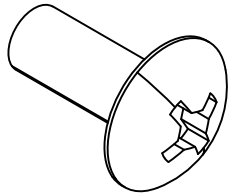

G - 1/4 - 20 x 5/8" MACH Screw
(E01-0113) x8

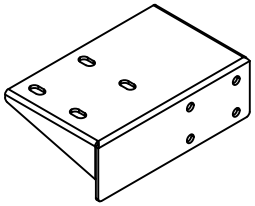

D - Support Bracket - Screen Rail, Single Sided
(A16-7245R) x1

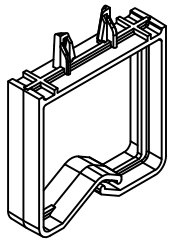

H - Wire Manager Clip
(B02-2007) x12 or x16 or x20

REMOVE SUPPORT BRACKETS

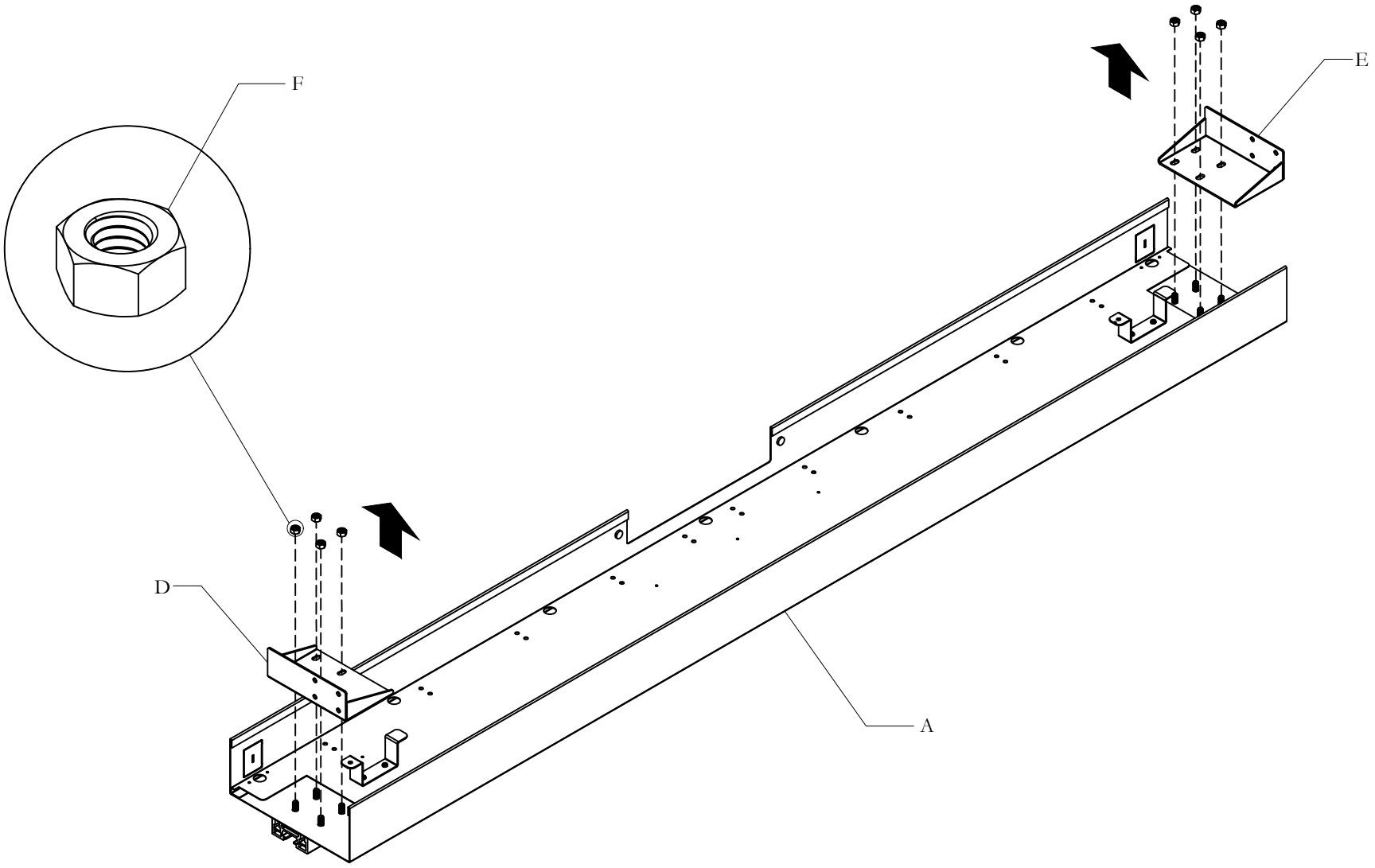

STEP 1: Remove Support Brackets. Make sure the bolts do not come out of the assembly.

SECURE SUPPORT BRACKETS TO FRAME

NOTE: Ensure that the Support Brackets are installed in the correct orientation as shown.

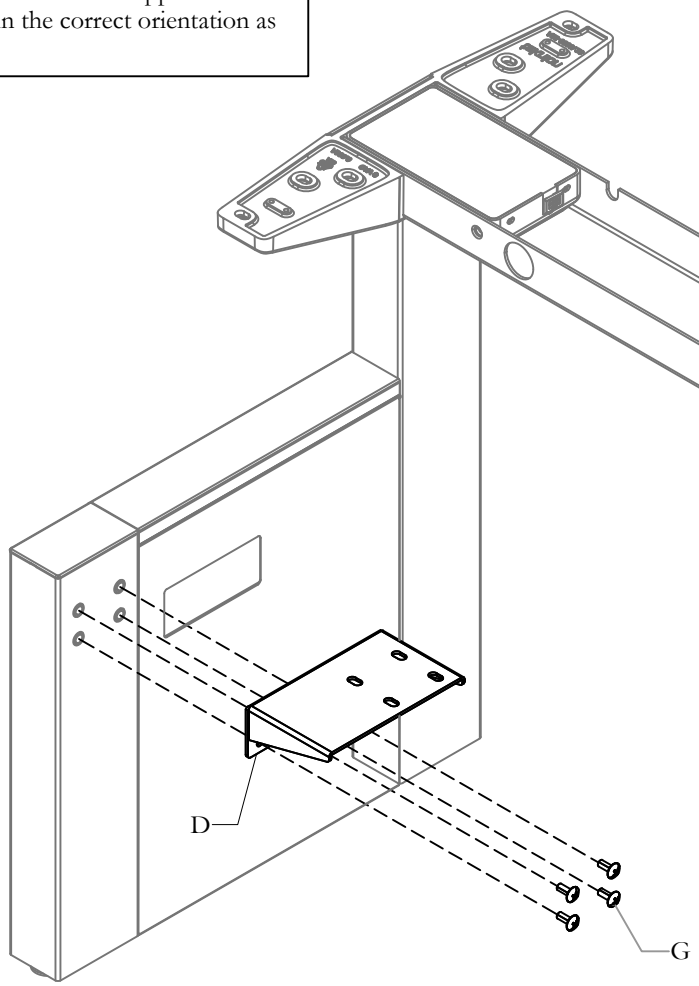

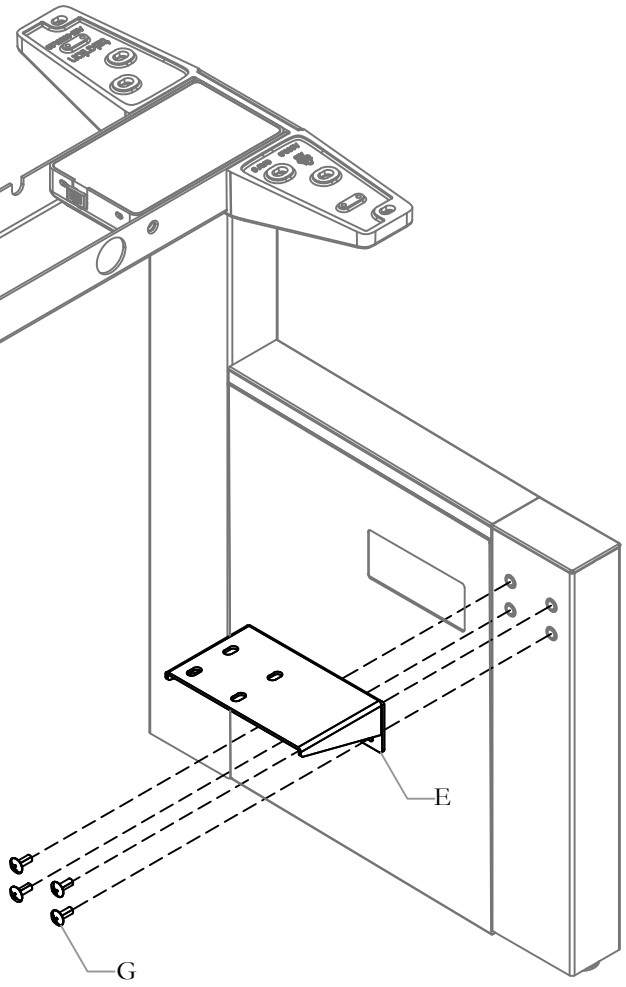

STEP 2: Secure Support Brackets to Rear Legs with Bolts.

CABLE CHANNEL ASSEMBLY

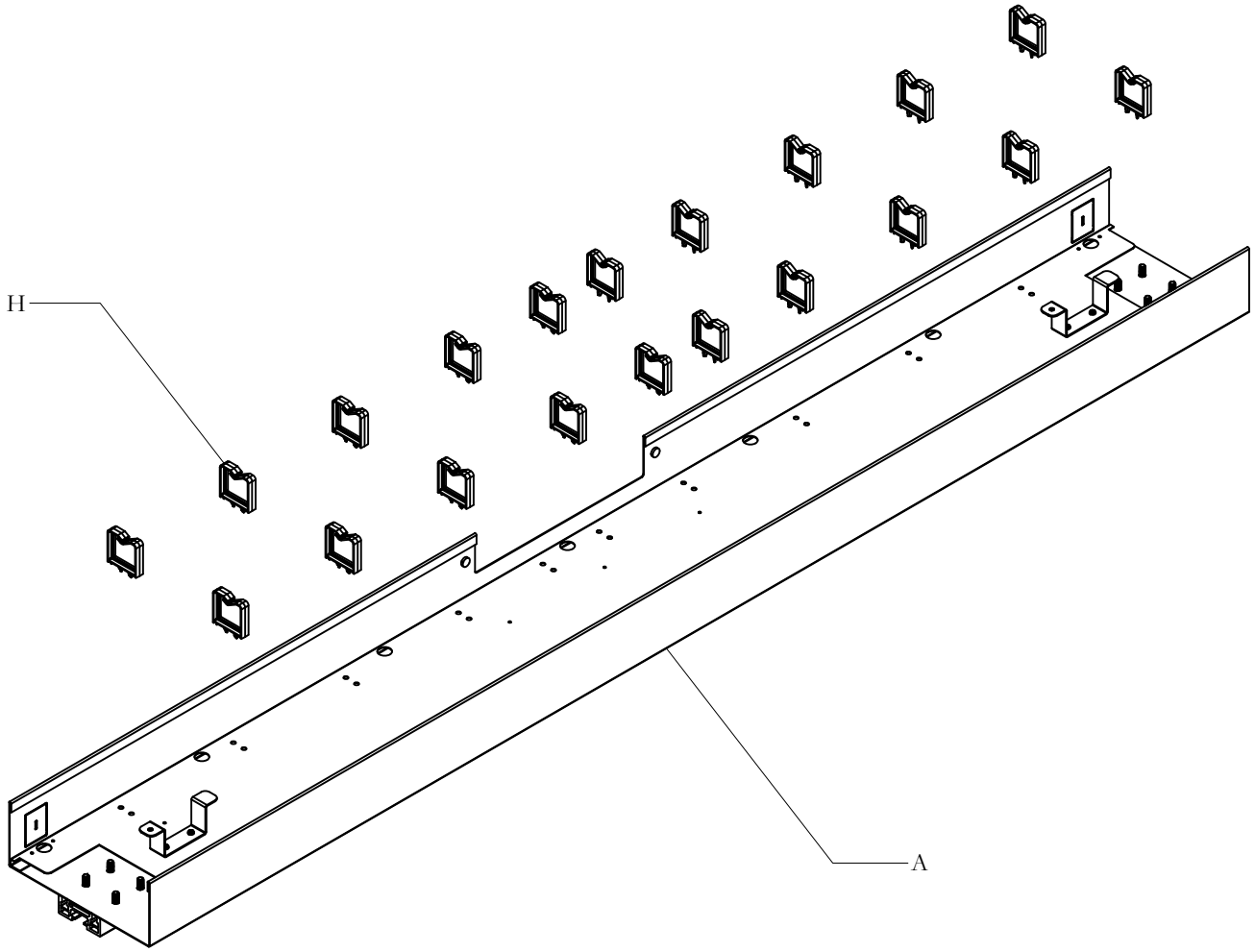

NOTE: Electrics components to be installed on Cable Channel before connecting to Support Brackets. Please refer to Installation Guide 321a, 321b, 322a, or 322b for corresponding Electrics installation.

ATTACH WIRE CHANNEL

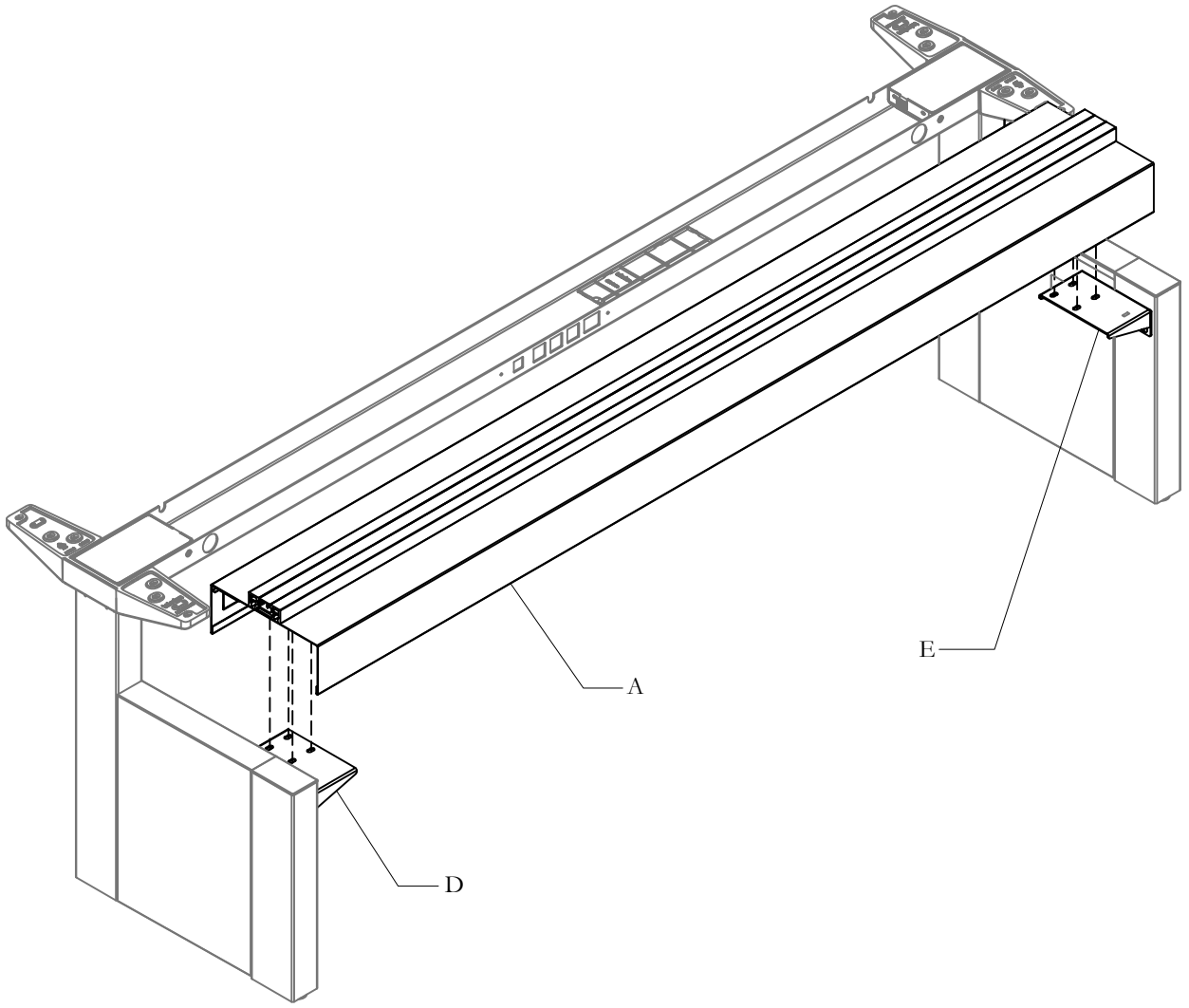

STEP 3: Align holes on Support Brackets and Wire Channel, Insert Bolts inside Center Rail Extrusion through Wire Channel and Brackets as shown.

SECURE WIRE CHANNEL

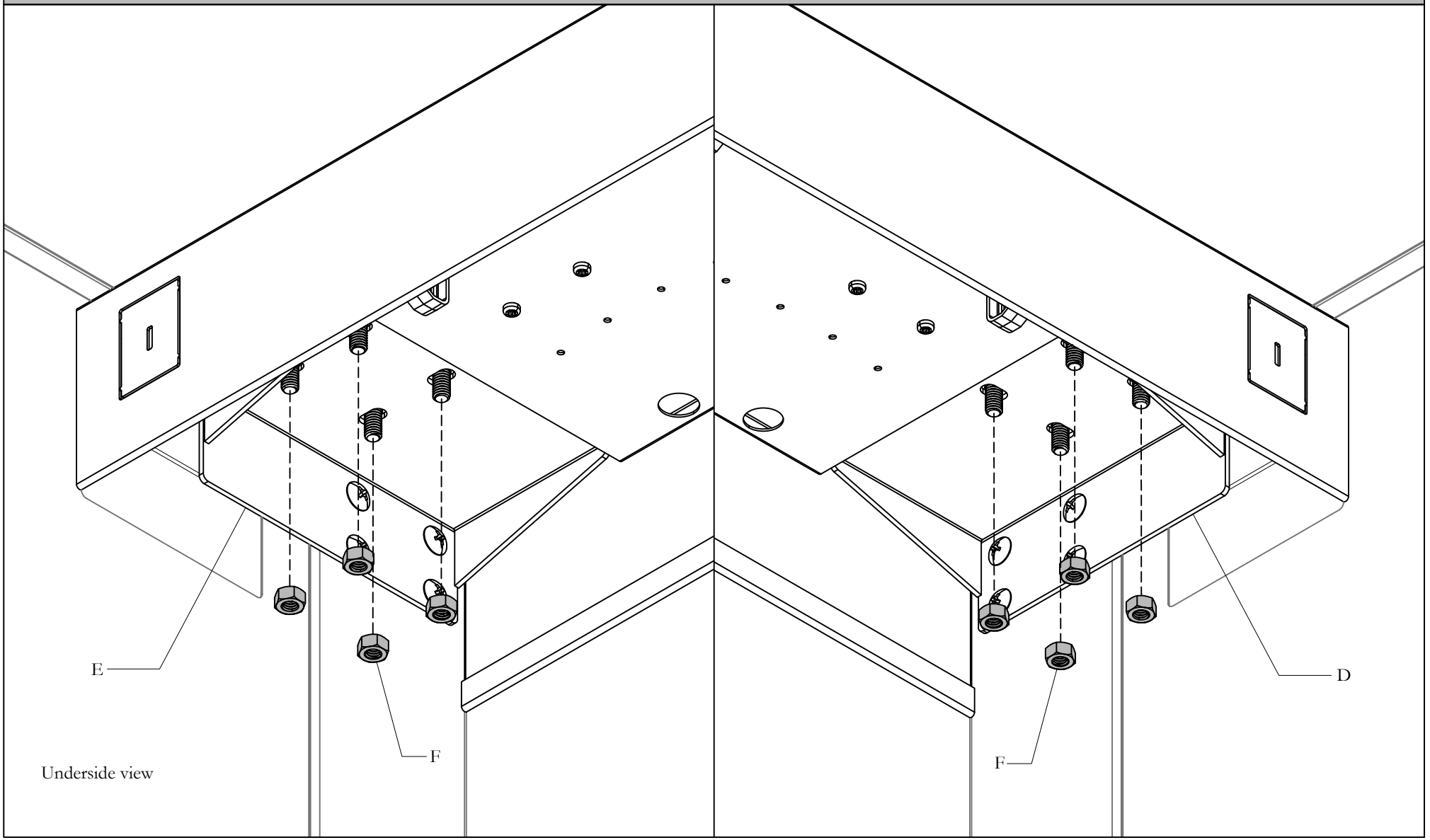

STEP 4: Secure Wire Channel in place with Nuts.

CENTER RAIL EXTRUSION CAP

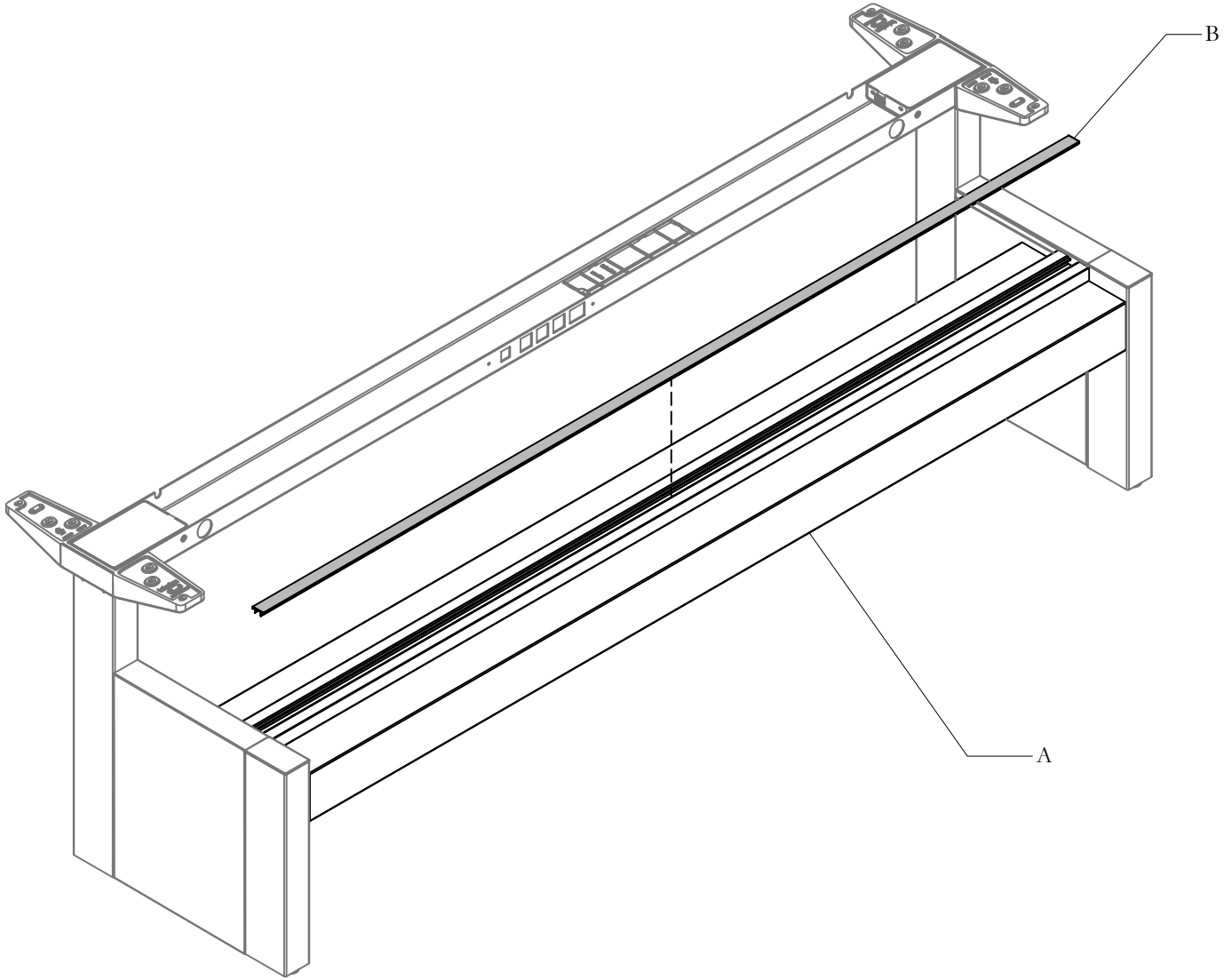

STEP 5: Insert Center Rail Extrusion Caps onto Center Rail Extrusion as shown.

Navigate Single-Sided Corridor Screen - Fabric (HNBLSF), Navigate Single-Sided Corridor Screen - Solid (HNBLSS)

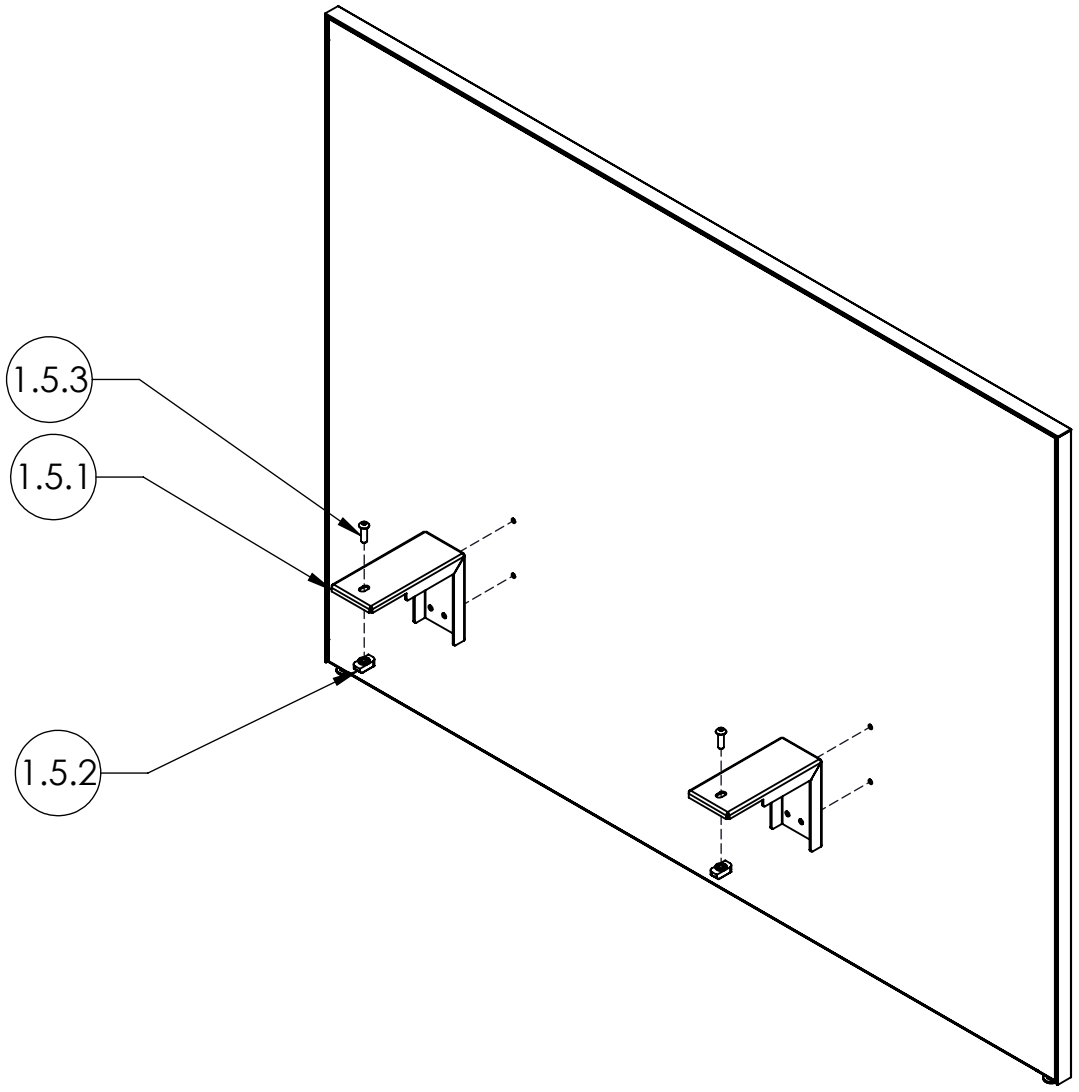

Part & Product Identification

ITEM NO.	PREVIEW	DESCRIPTION	PART NUMBER	QTY.
1. NAVIGATE SINGLE SIDED CORRIDOR SCREEN - FABRIC (HNBLSF)				
1.1	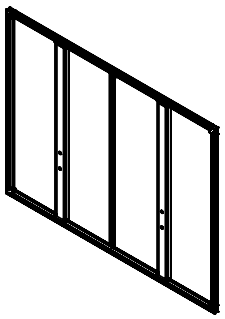	FRAME ASSY FRAMED FABRIC FLOOR SCREEN SS HAB CORRIDOR	N03-3067\42\54	1
1.2	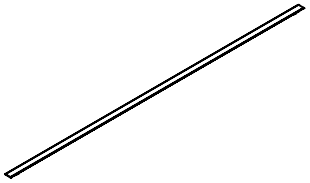	TOP TRIM CUT SIZES - FABRIC SCREEN	A23-6540-X	1
1.3	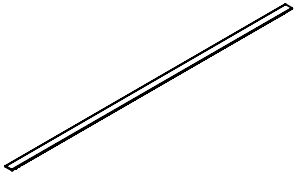	VERTICAL TRIM CUT SIZES - NAVIGATE END OF RUN SCREEN	A23-7431-X	2
1.4	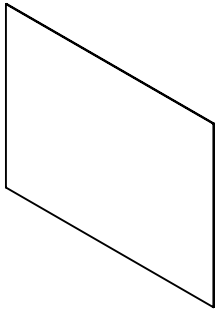	FABRIC & SUBSTRATE ASSY - NAVIGATE FLOOR SCREEN	N03-3045\42\54	2

ITEM NO.	PREVIEW	DESCRIPTION	PART NUMBER	QTY.
1.5. FABRIC CORRIDOR SCREEN MOUNTING BRKT KIT, HAB (X06-0619)				2
1.5.1	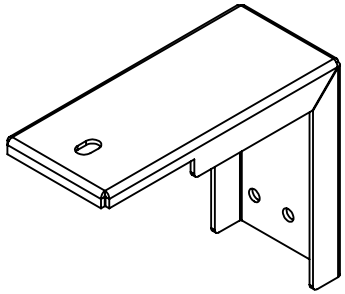	CORRIDOR SCREEN BRKT, HAB	A16-7801	1
1.5.2	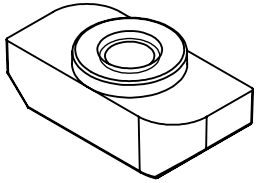	MOUNTING NUT	A25-0386	1
1.5.3	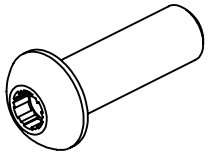	5/16"-18 x 1" SOCKET BUTTON HEAD SCREW	E01-0651	1
1.5.4	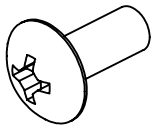	1/4-20X5/8" MACH SCR, BLACK, QUAD,TRUSS	E01-0113	2

Part & Product Identification

ITEM NO.	PREVIEW	DESCRIPTION	PART NUMBER	QTY.
2. NAVIGATE SINGLE SIDED CORRIDOR SCREEN - SOLID (HNBLSS)				
2.1	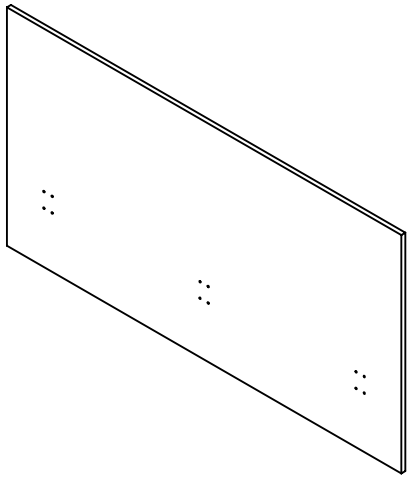	CORRIDOR SCREEN, HAB	C07-5199\51\96	1
2.2	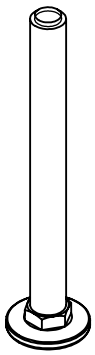	LEVELLER BOLT	D03-0037	2

ITEM NO.	PREVIEW	DESCRIPTION	PART NUMBER	QTY.
2.3. SOLID CORRIDOR SCREEN MOUNTING BRKT KIT, HAB (X06-0610)				2 or 3
2.3.1	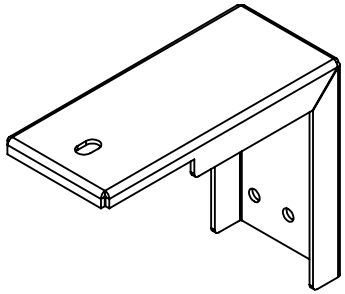	CORRIDOR SCREEN BRKT, HAB	A16-7801	1
2.3.2	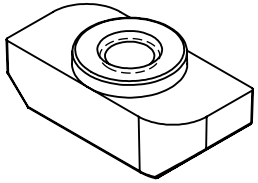	MOUNTING NUT	A25-0386	1
2.3.3	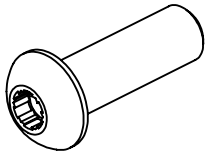	5/16"-18 x 1" SOCKET BUTTON HEAD SCREW	E01-0651	1
2.3.4	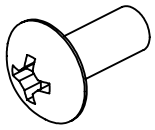	1/4-20X5/8" MACH SCR, BLACK, QUAD,TRUSS	E01-0113	4

ATTACH BRACKETS

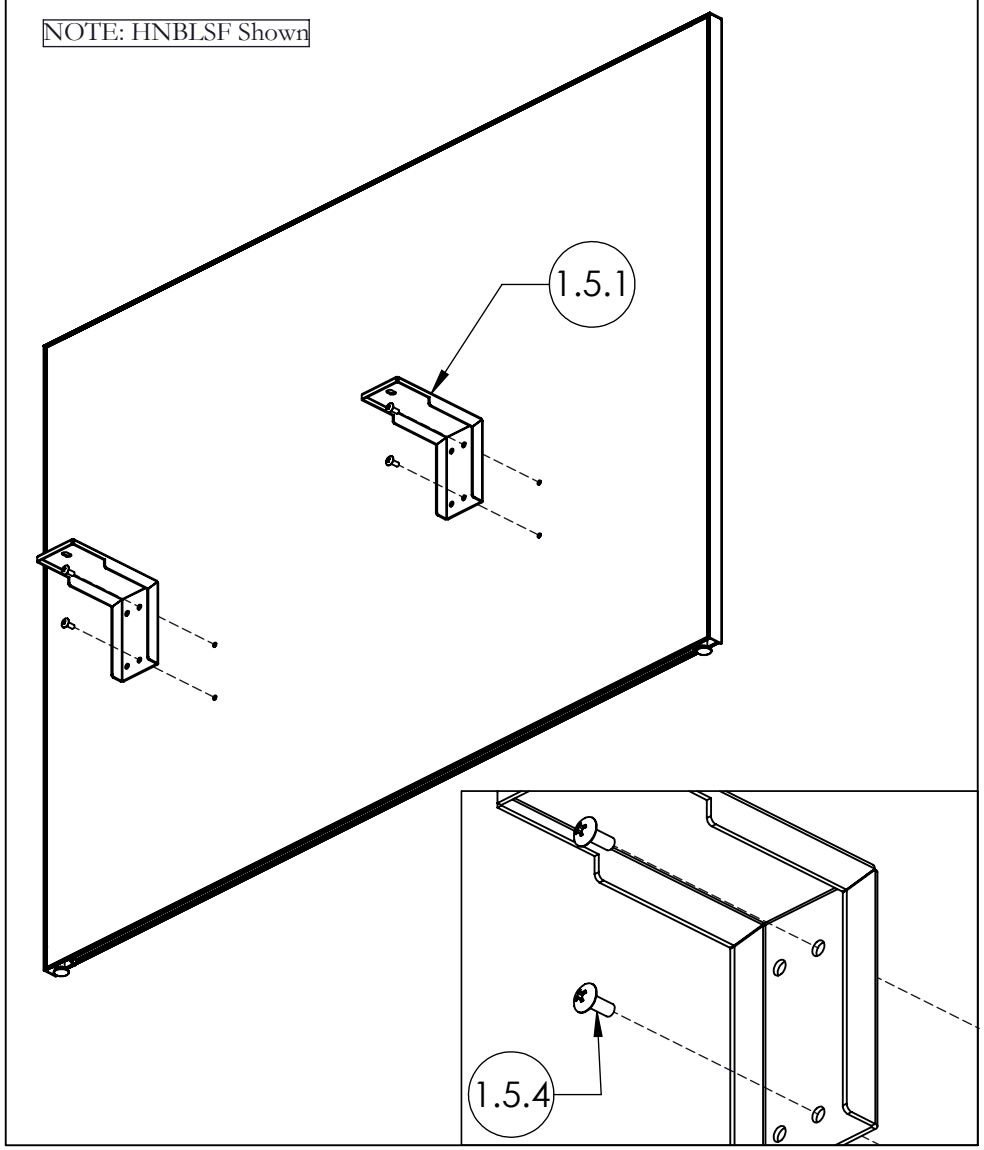

STEP 1a: Attach Brackets as shown above with screws provided.

ASSEMBLE T-NUTS

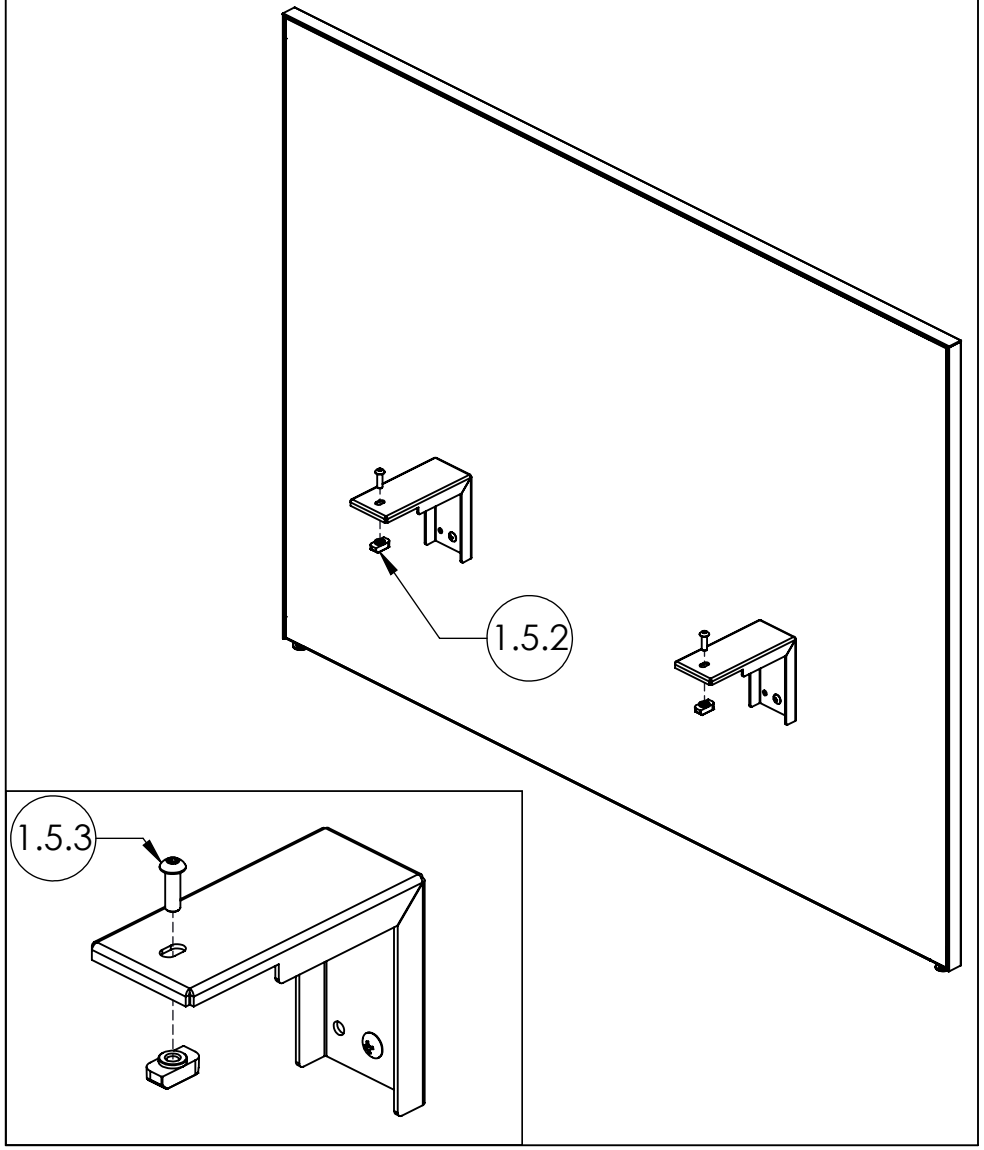

STEP 2a: Assemble T-Nuts as shown above.

ATTACH BRACKETS

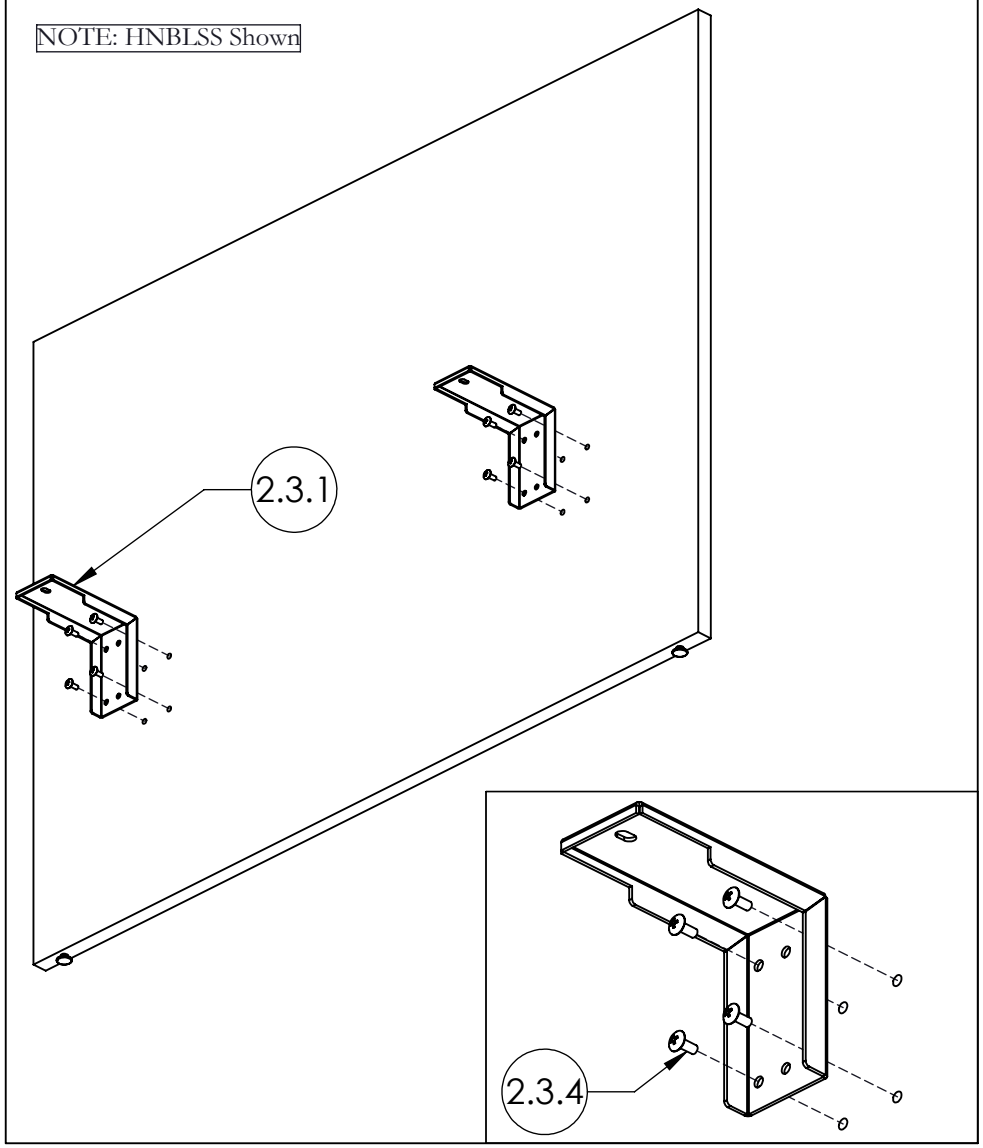

STEP 1b: Attach Brackets as shown above with screws provided.

ASSEMBLE T-NUTS

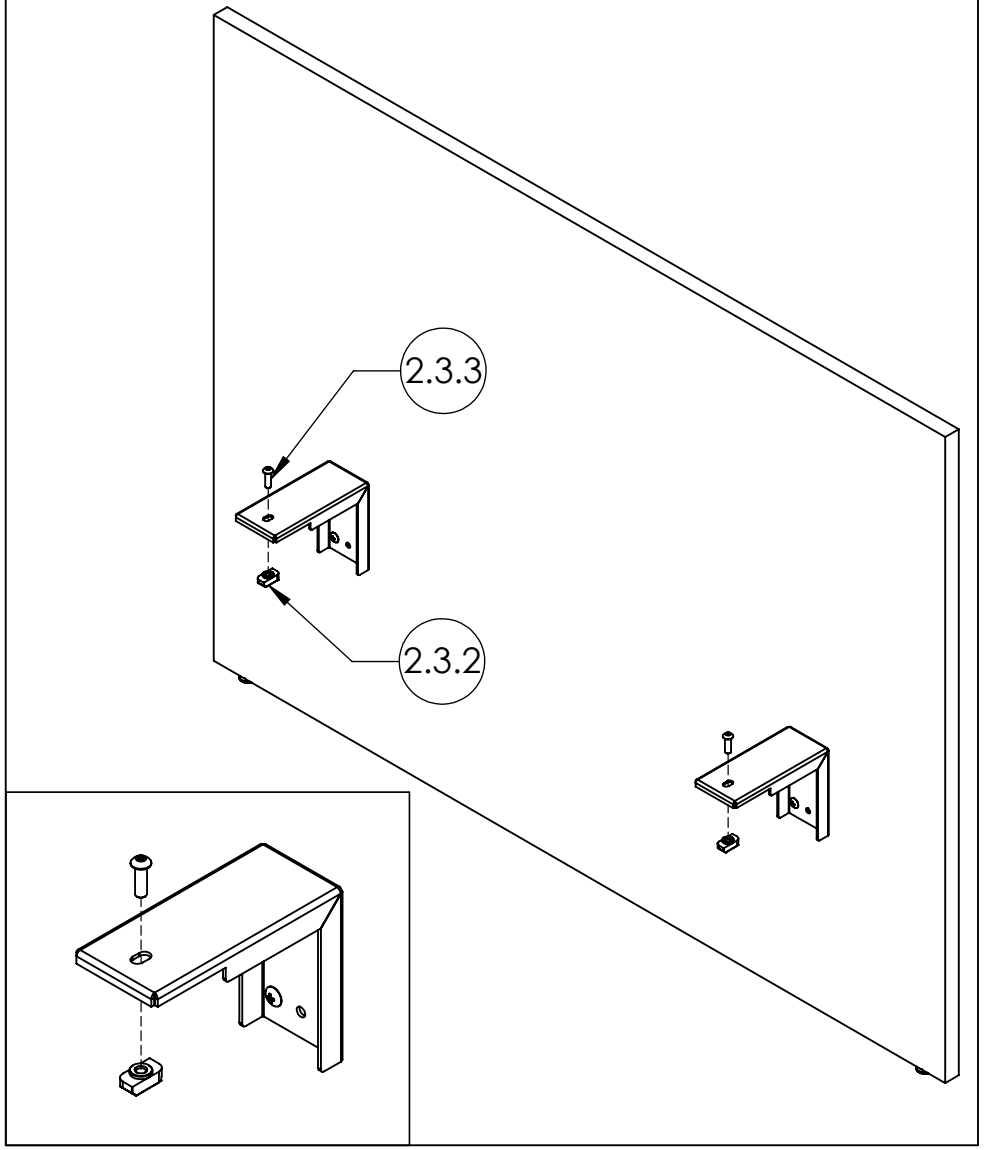

STEP 2b: Assemble T-Nuts as shown above.

ALIGN T-NUTS

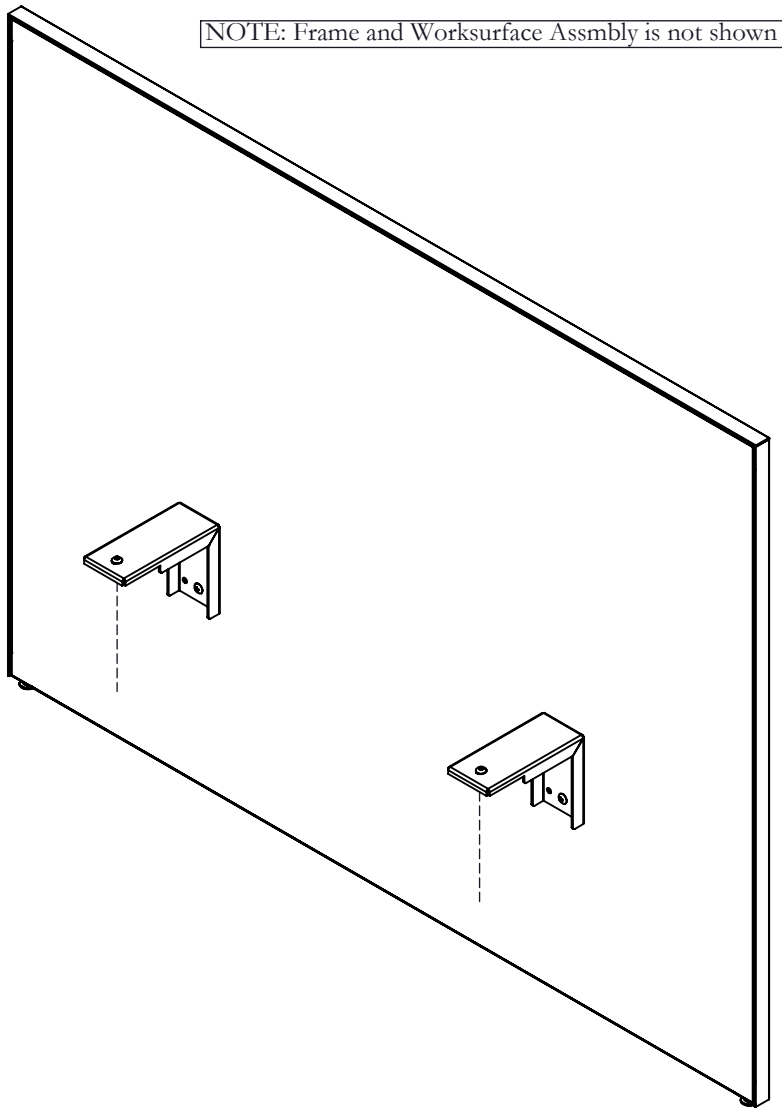

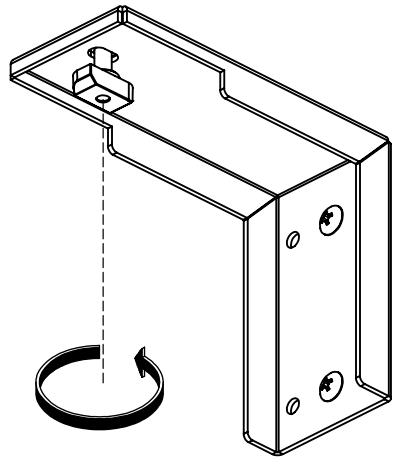

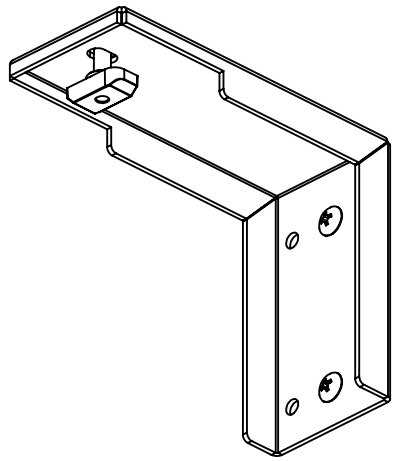

STEP 3: Align T-Nuts parallel to the wire channel.

FASTEN SCREWS

NOTE: Worksurface not shown for illustration purpose.

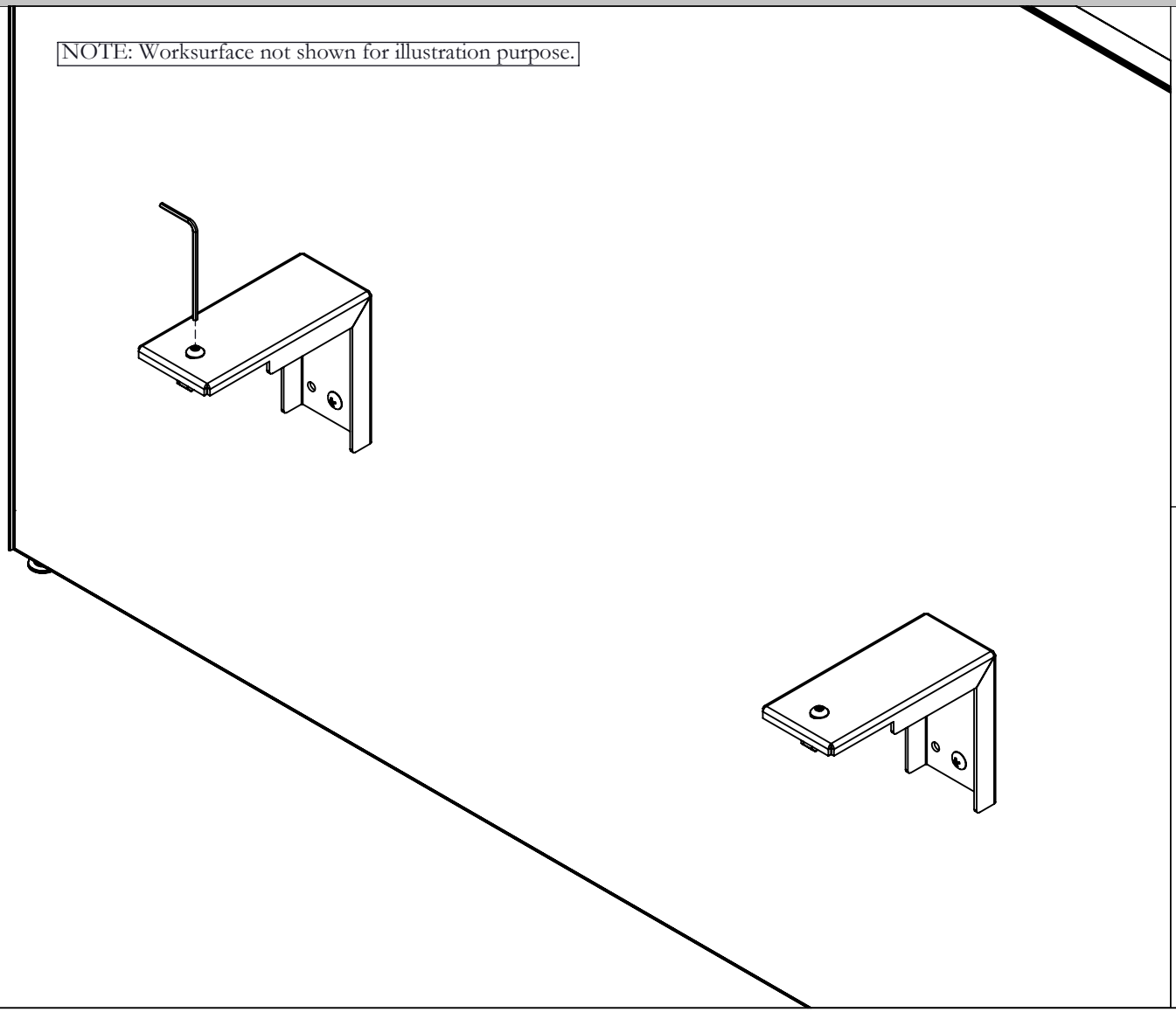

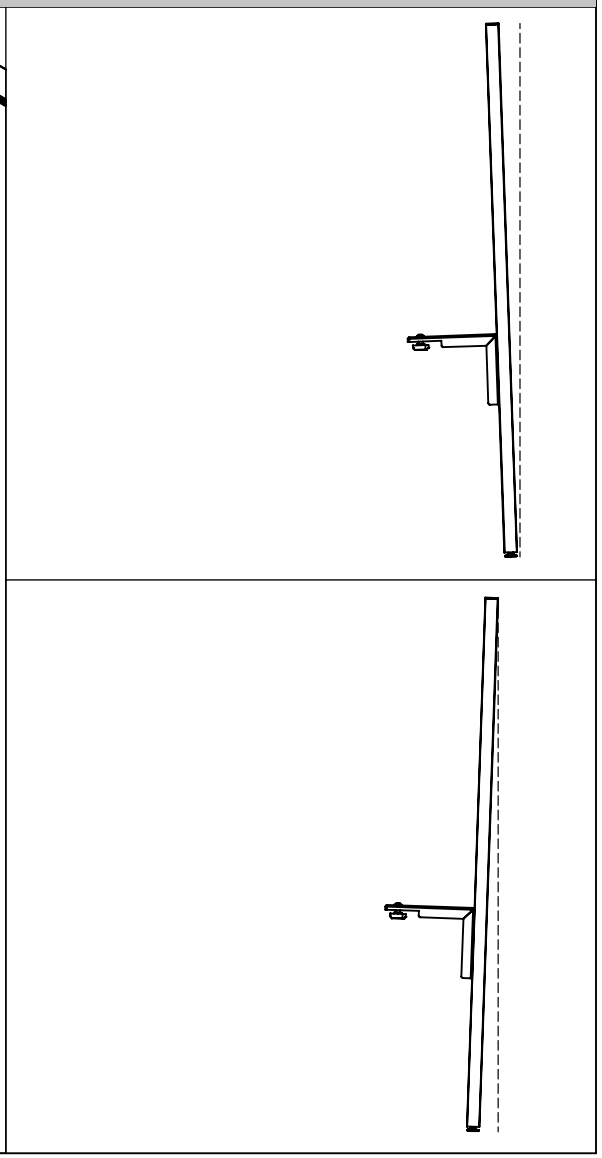

STEP 4: Fasten T-Nuts with an Allen Key. Make sure the screen is perpendicular to the ground.

ADJUST LEVERLLERS (OPTIONAL)

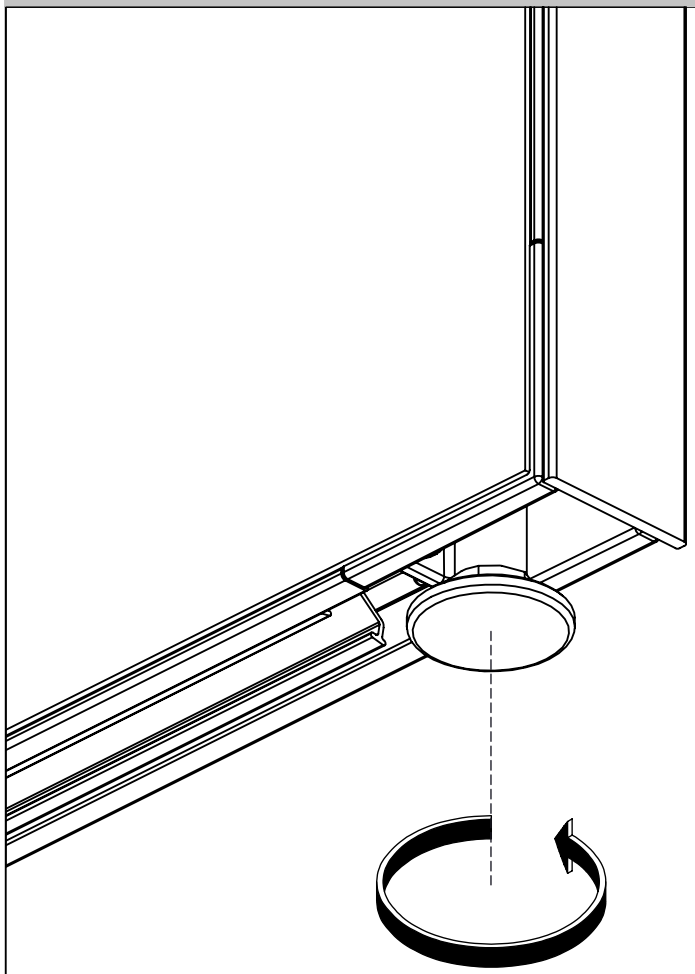

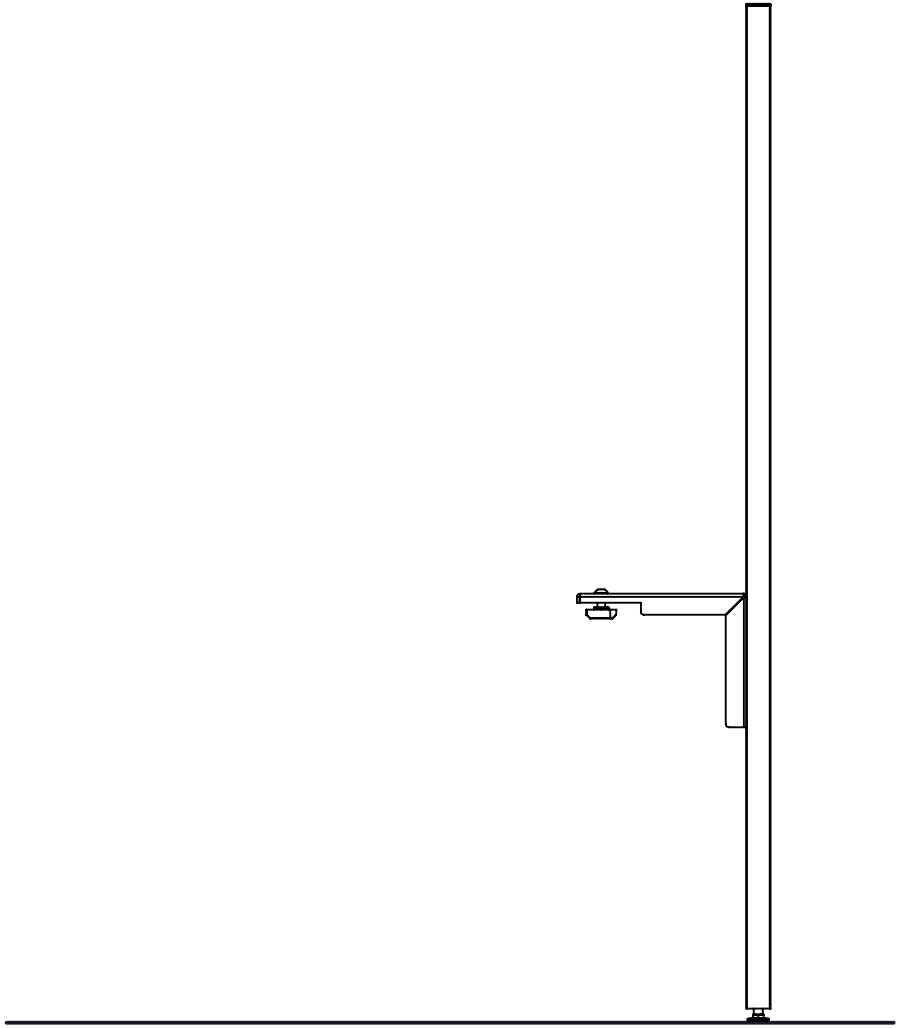

STEP 5: Using a wrench, adjust Levellers to achieve stability.

Navigate 120 Mid Cover - Metal (HNBCCMMT)

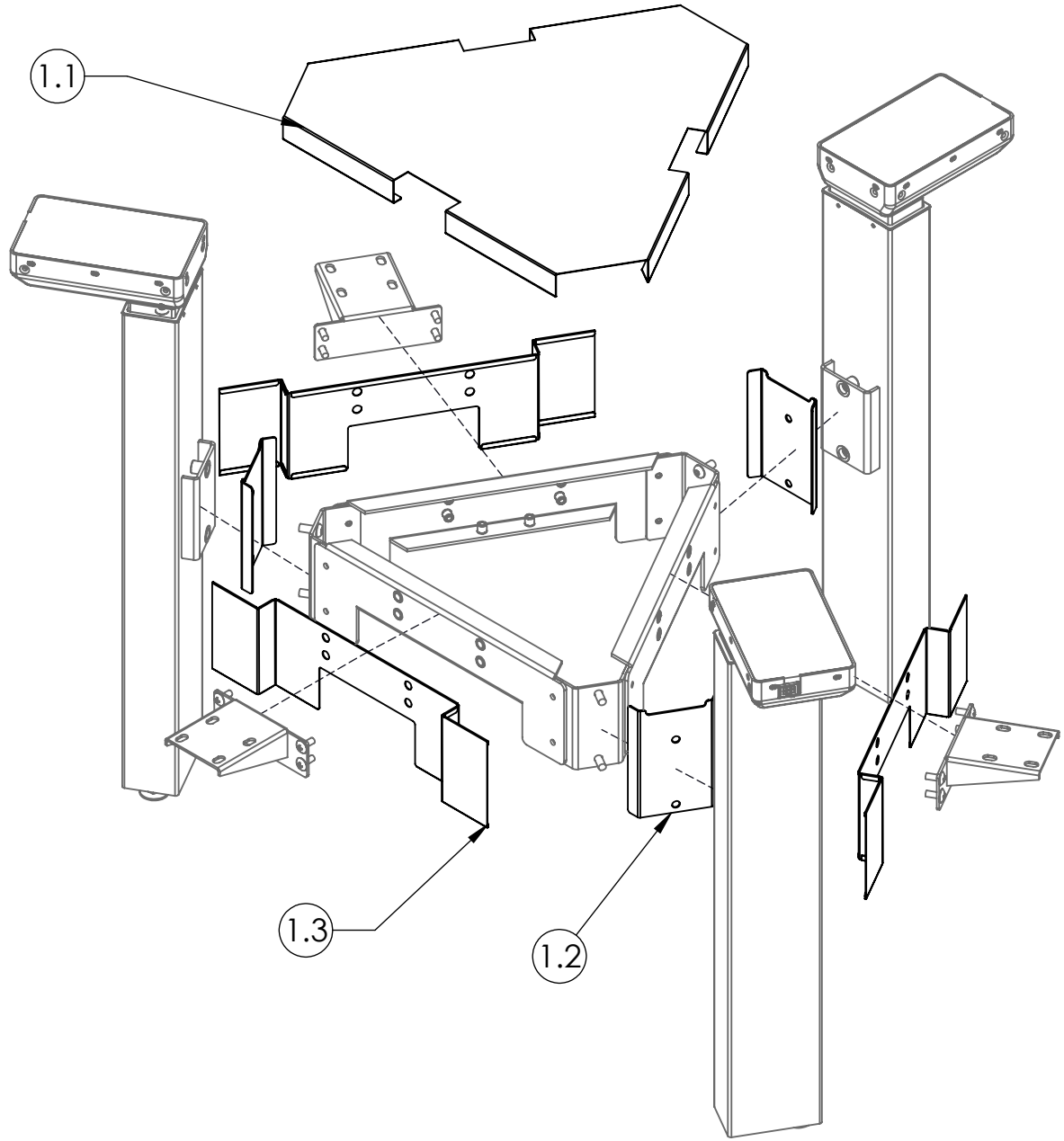

Part & Product Identification

ITEM NO.	PREVIEW	DESCRIPTION	PART NUMBER	QTY.
1.1	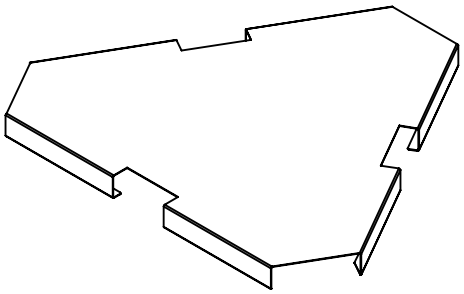	TOP COVER MID GABLE WELDED ASSY. 120 NAV. HAB	N09-8988X	1
1.2	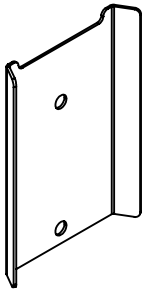	SPACER MID GABLE 120 NAVIGATE HAB	A16-7672	3
1.3	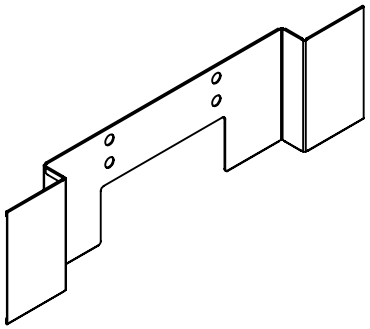	COVER PLATE MID-GABLE 120 NAVIGATE HAB	A16-7449	3

ATTACH COVER PLATE TO FRAME

NOTE: Please refer to HABN_123 for hardware components required

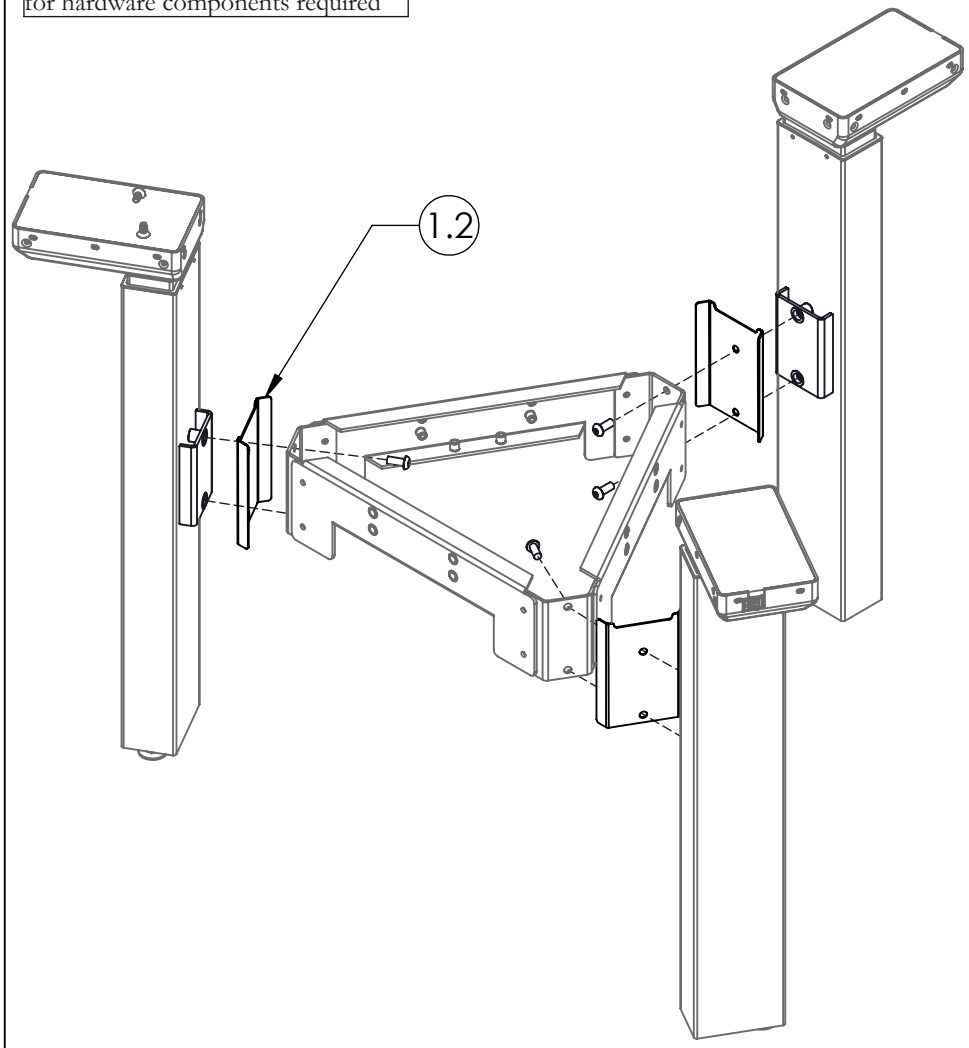

STEP 1: Attach the Cover Plate to the Legs and Mid-Gable Stretcher Assembly using the Machine Screws provided with the 120 Frame

ATTACH SPACER TO FRAME

NOTE: Bracket and Screws come with Cable Channel

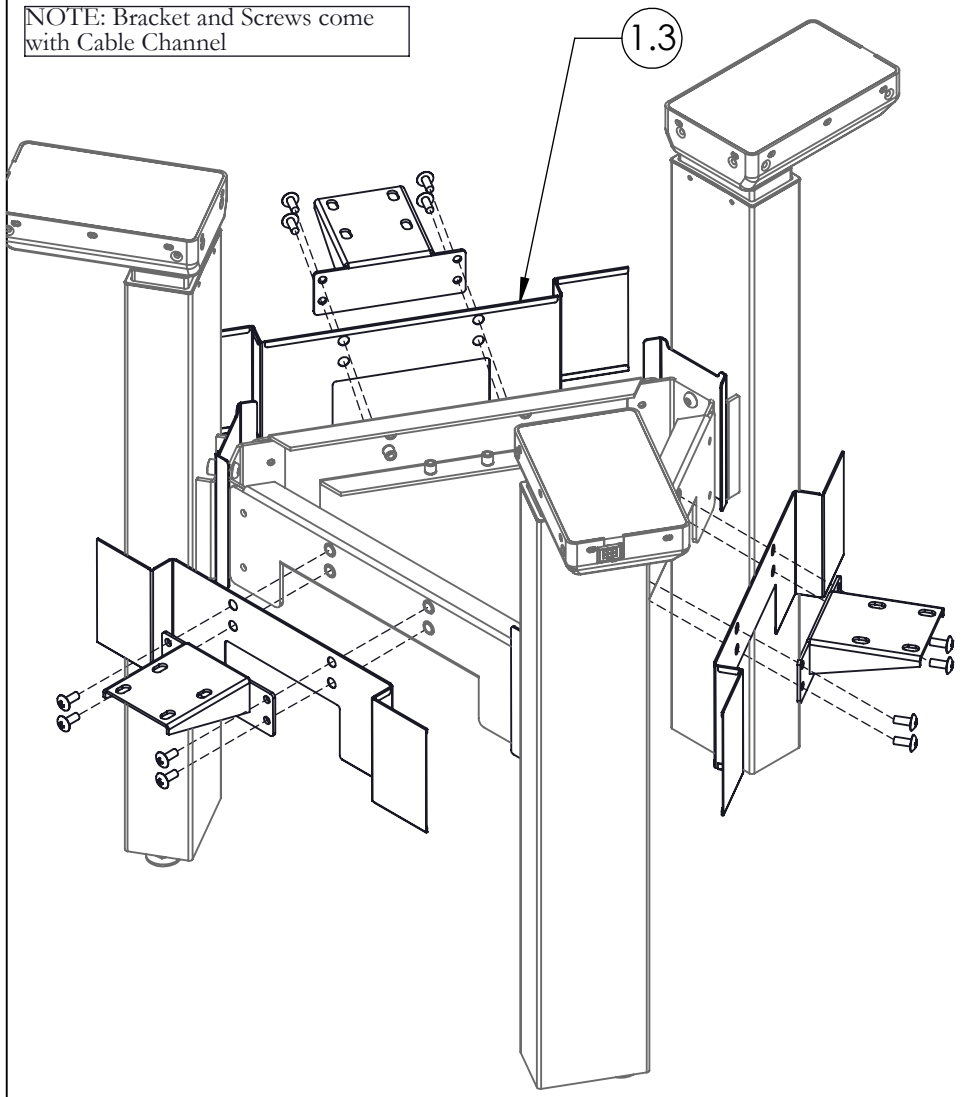

STEP 2: Attach the Spacer to the Mid-Gable Stretcher Frame along with the Bracketm using the Screws provided with the Cable Channel.

PLACE TOP COVER

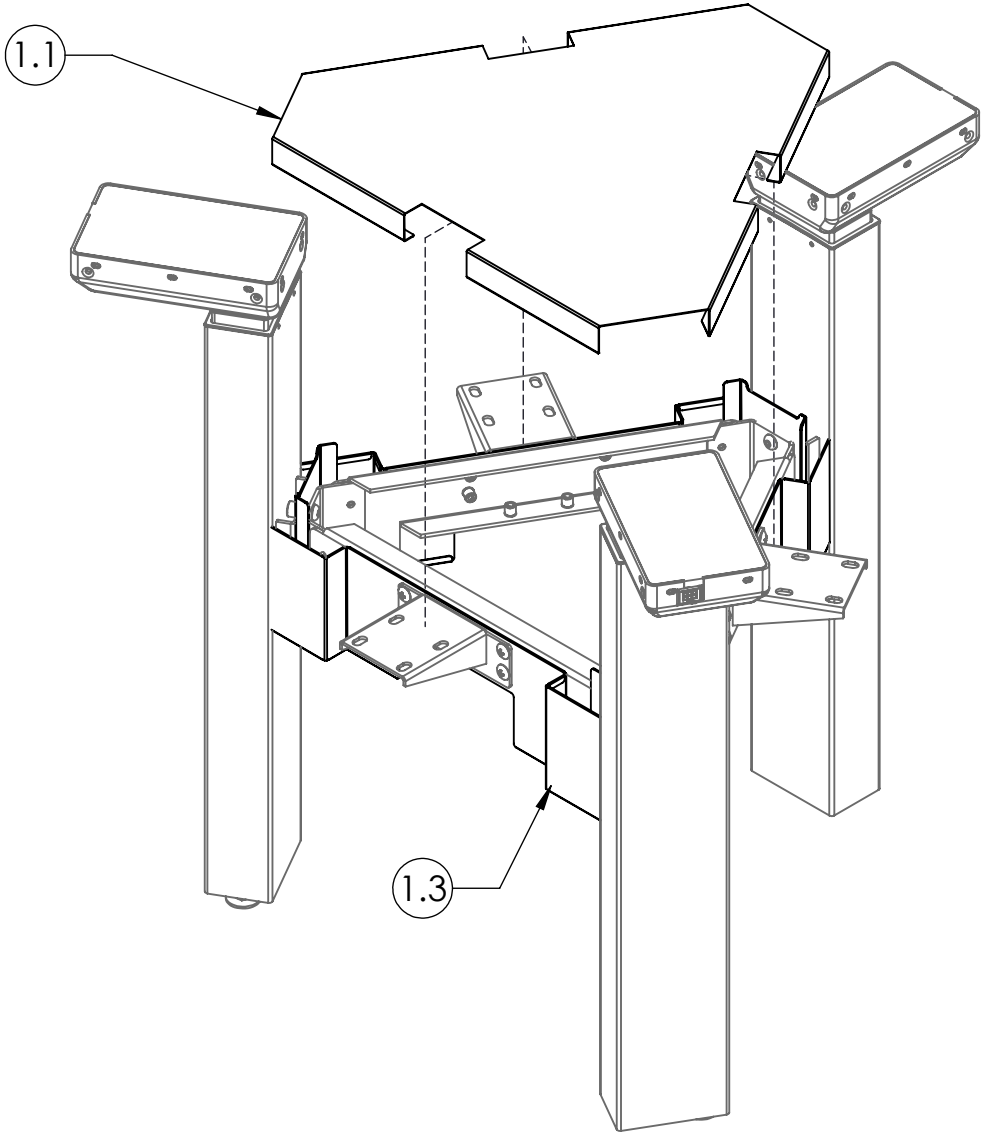

STEP 3: Place the Top Cover on top of the Assembly.

Navigate 120 Mid Gable, Solid (HNBCGMST) Navigate 120 Mid Gable, Metal (HNBCGMMT)

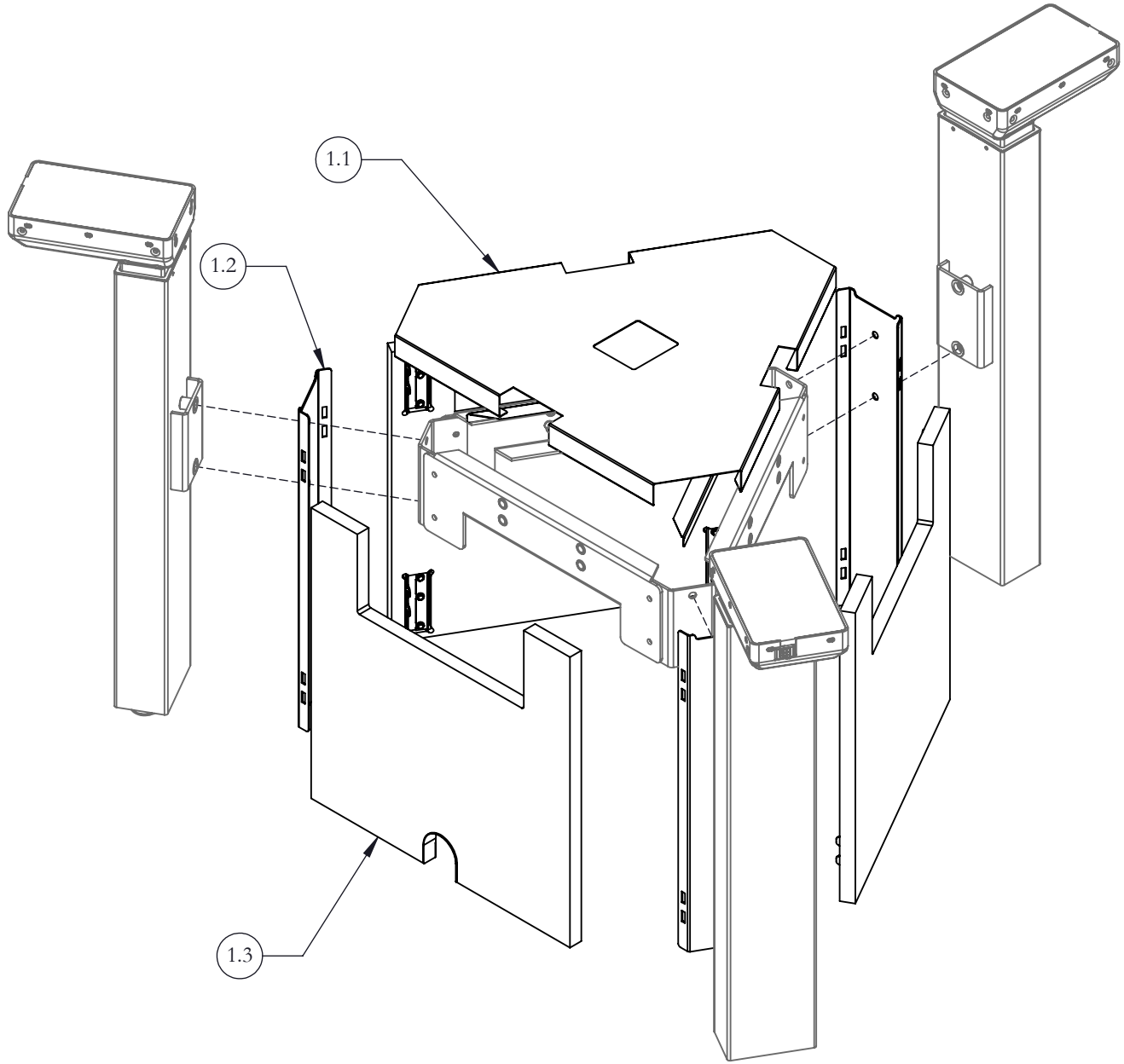

Part & Product Identification

ITEM NO.	PREVIEW	DESCRIPTION	PART NUMBER	QTY.
1.1	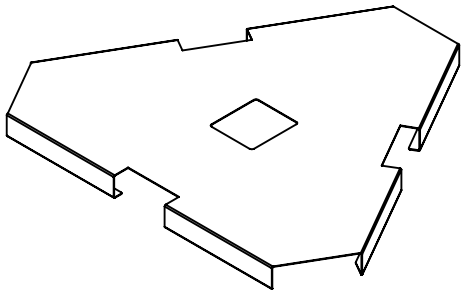	TOP COVER MID GABLE WELDED ASSY. 120 NAV. HAB	N09-8988X	1
1.2	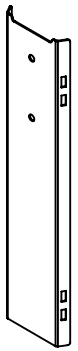	HANGER PLATE MID GABLE 120 NAVIGATE HAB	A16-7458	3
1.3	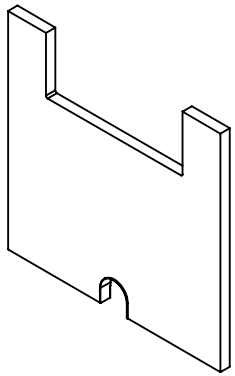	NAVIGATE 120 HNB MID GABLE ASSEMBLY-SOLID	N03-3046X	1

ATTACH COVER PLATE TO FRAME

NOTE: Please refer to HAB_123 for hardware components required

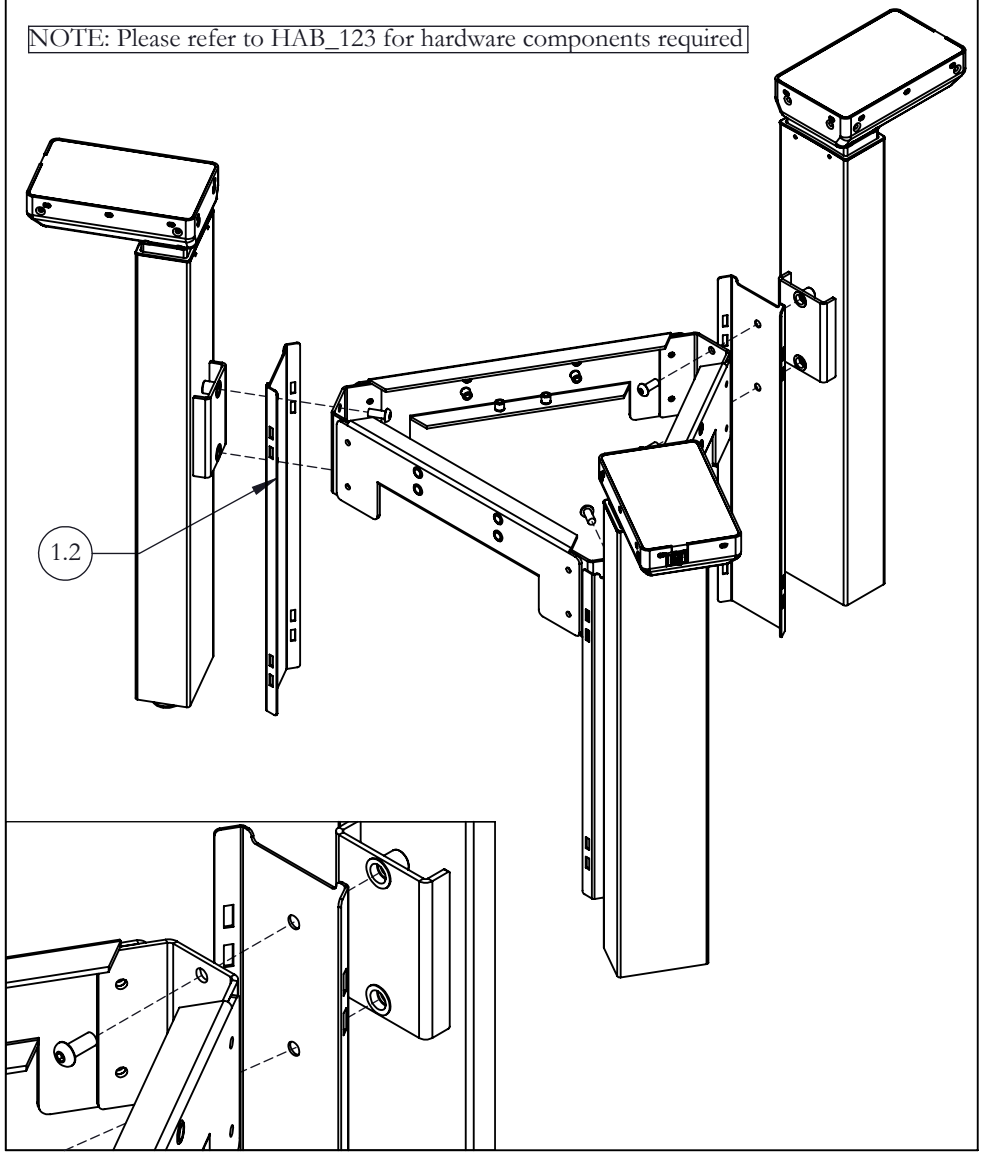

STEP 1: Attach the Cover Plate to the Legs and Mid-Gable Stretcher Assembly using the Machine Screws provided with the 120 Frame.

ATTACH SPACER TO FRAME

NOTE: Please refer to HAB_123 for hardware components required

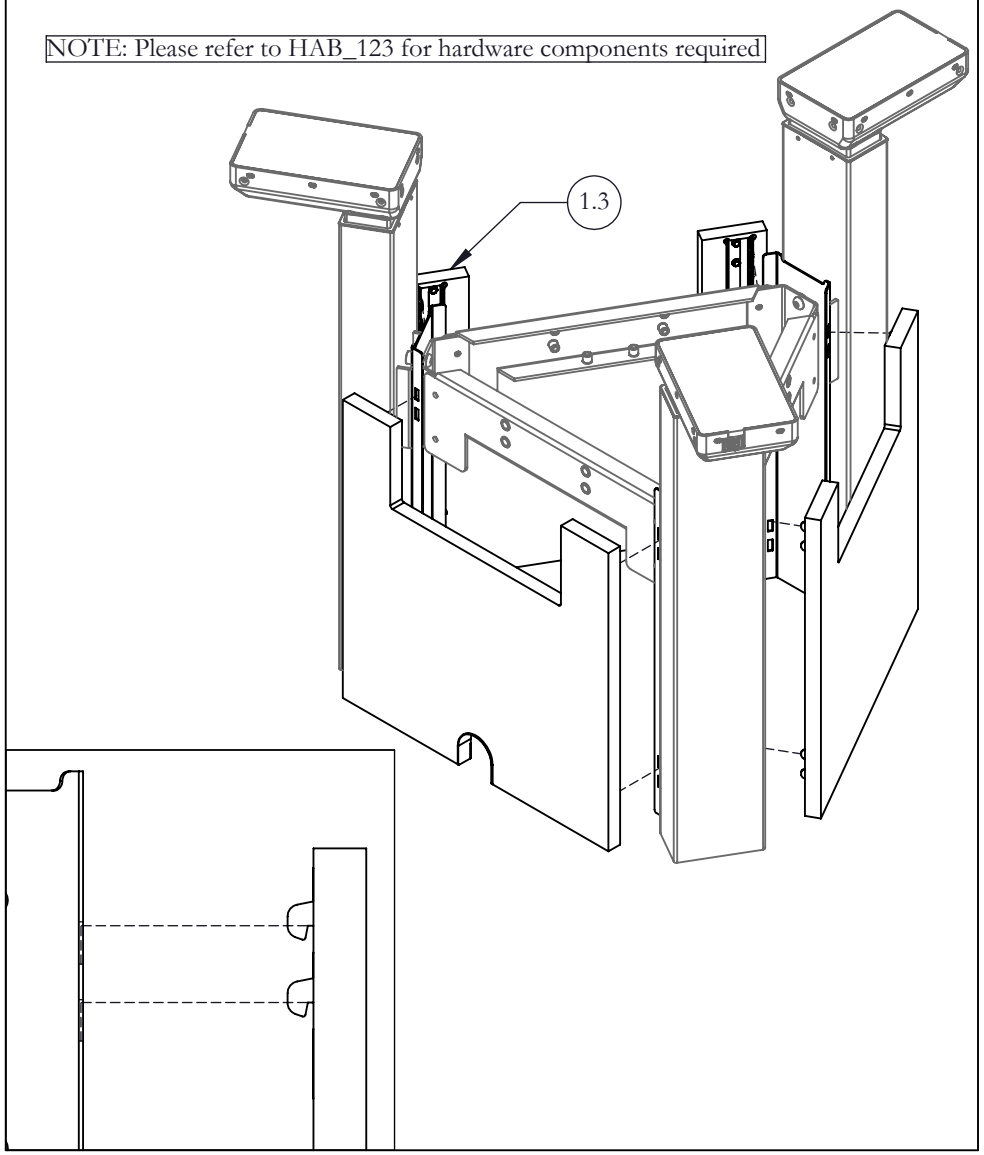

STEP 2: Attach the Spacer to the Mid-Gable Stretcher Frame along with the Bracketm using the Screws provided with the Cable Channel.

PLACE TOP COVER

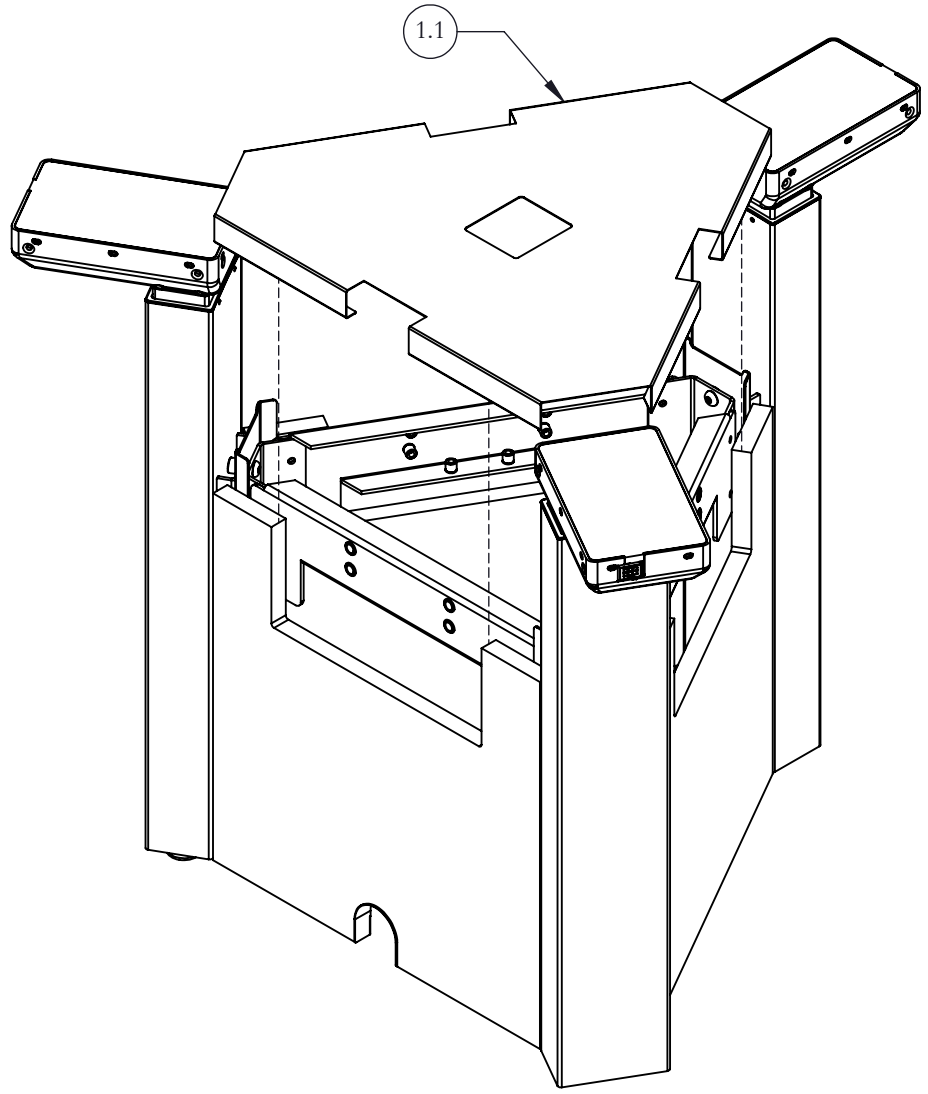

STEP 3: Place the Top Cover on top of the assembly.

Navigate Single-Sided End Cover - Metal (HNBCCEMS), Navigate Single-Sided Mid Cover - Metal (HNBCCMMS)

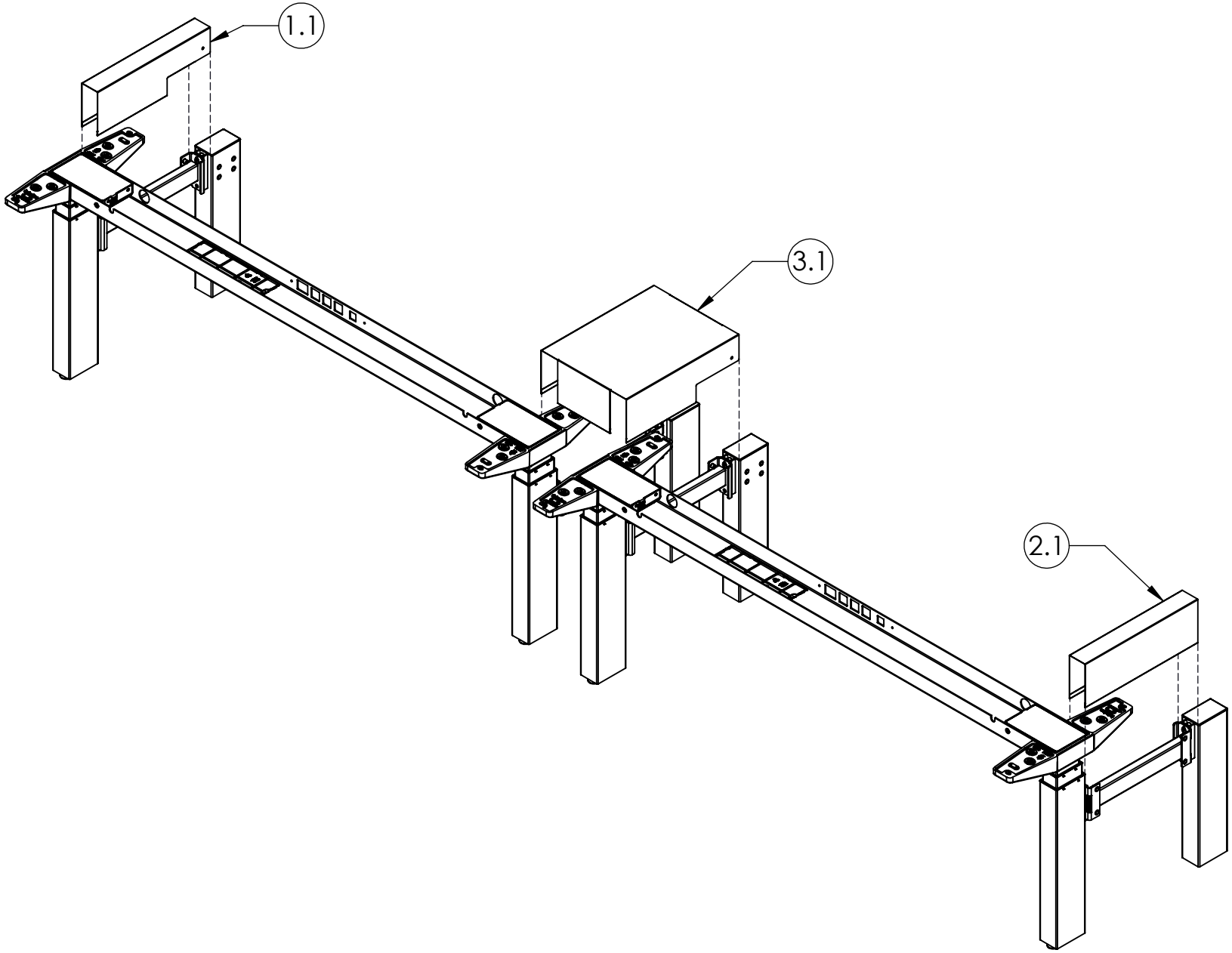

Part & Product Identification

ITEM NO.	PREVIEW	DESCRIPTION	PART NUMBER	QTY.
1. NAVIGATE END COVER, SINGLE SIDED, HAB (HNBCCEMS30L)				
1.1	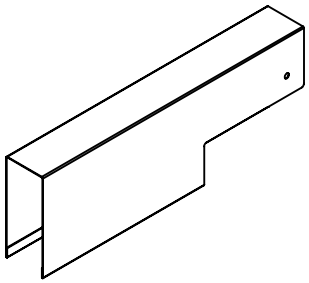	END COVER, SINGLE SIDED, HAB	A16-7621L\30	1
2. NAVIGATE END COVER, SINGLE SIDED, HAB (HNBCCEMS30R)				
2.1	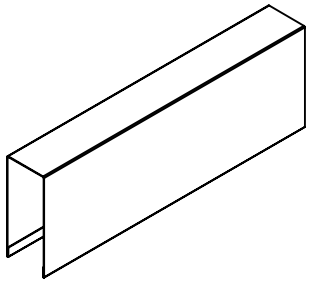	END COVER, SINGLE SIDED, HAB	A16-7621R\30	1

ITEM NO.	PREVIEW	DESCRIPTION	PART NUMBER	QTY.
3. NAVIGATE MID COVER, SINGLE SIDED, HAB (HNBCCMMS30)				
3.1	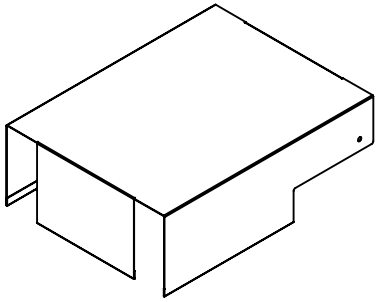	MID COVER, SINGLE SIDED, HAB	A16-7730\30	1

PLACE GABLE COVER (RIGHT)

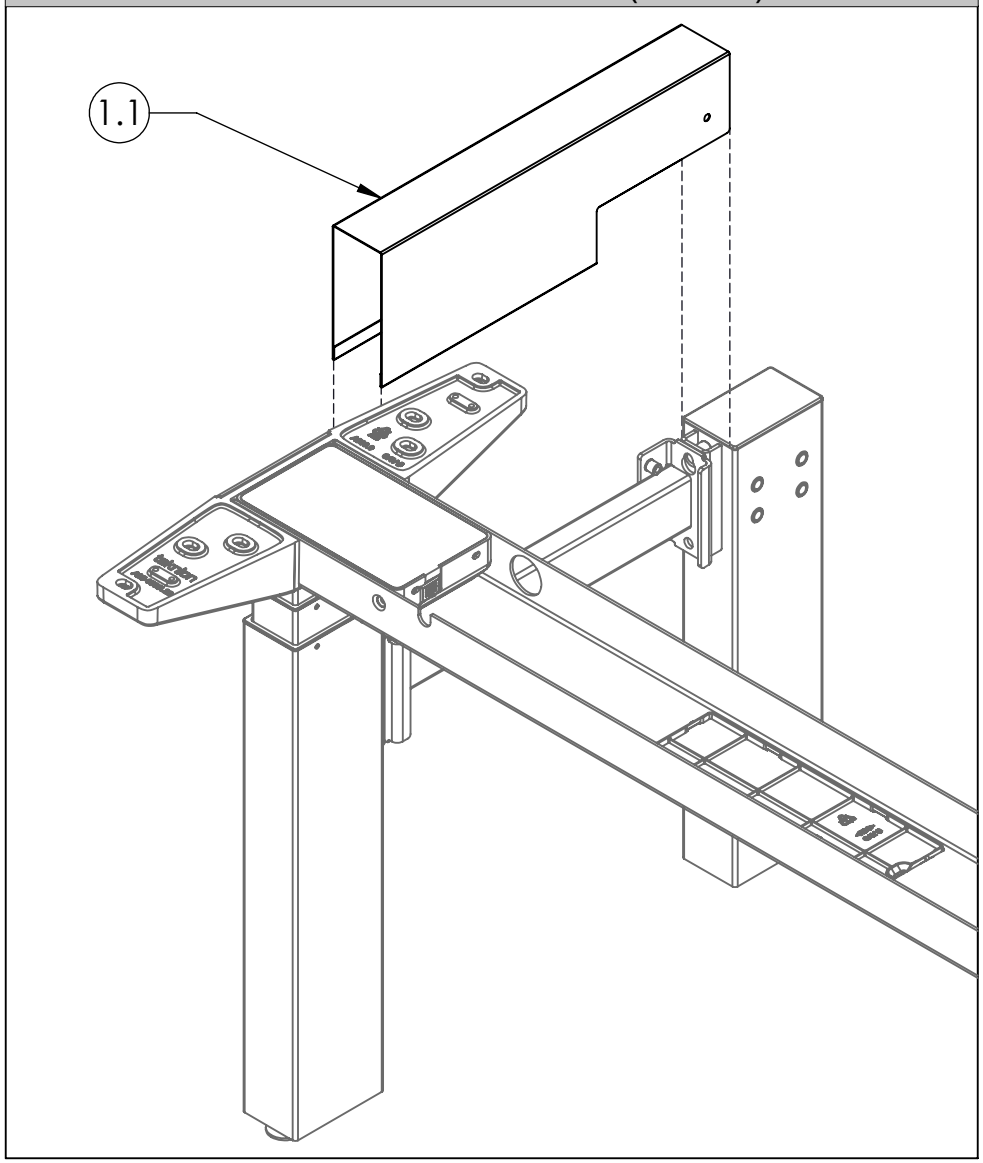

STEP 1a: Place the End Gable Cover - Right as shown above.

PLACE GABLE COVER (LEFT)

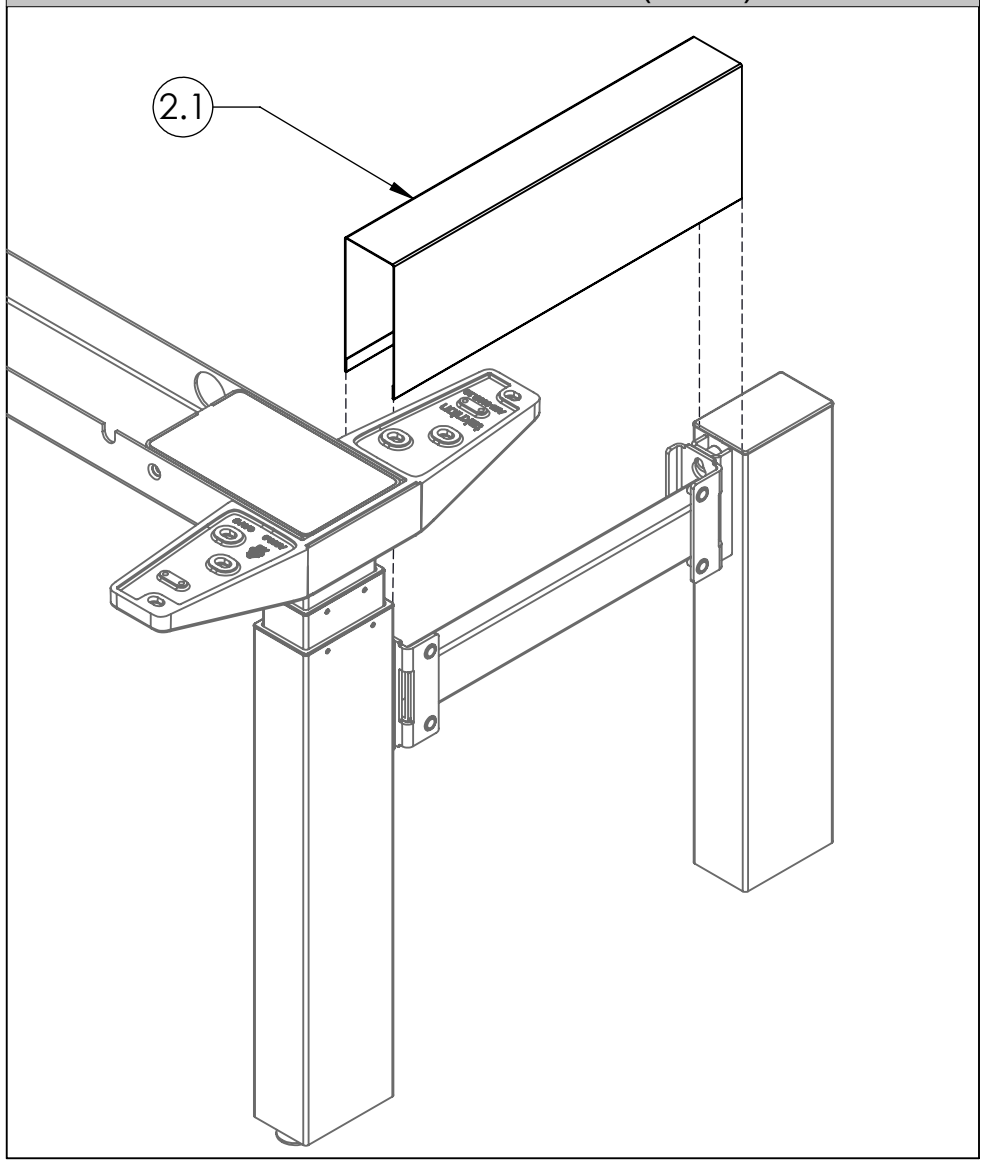

STEP 1b: Place the End Gable Cover - Left as shown above.

PLACE THE MID GABLE COVER

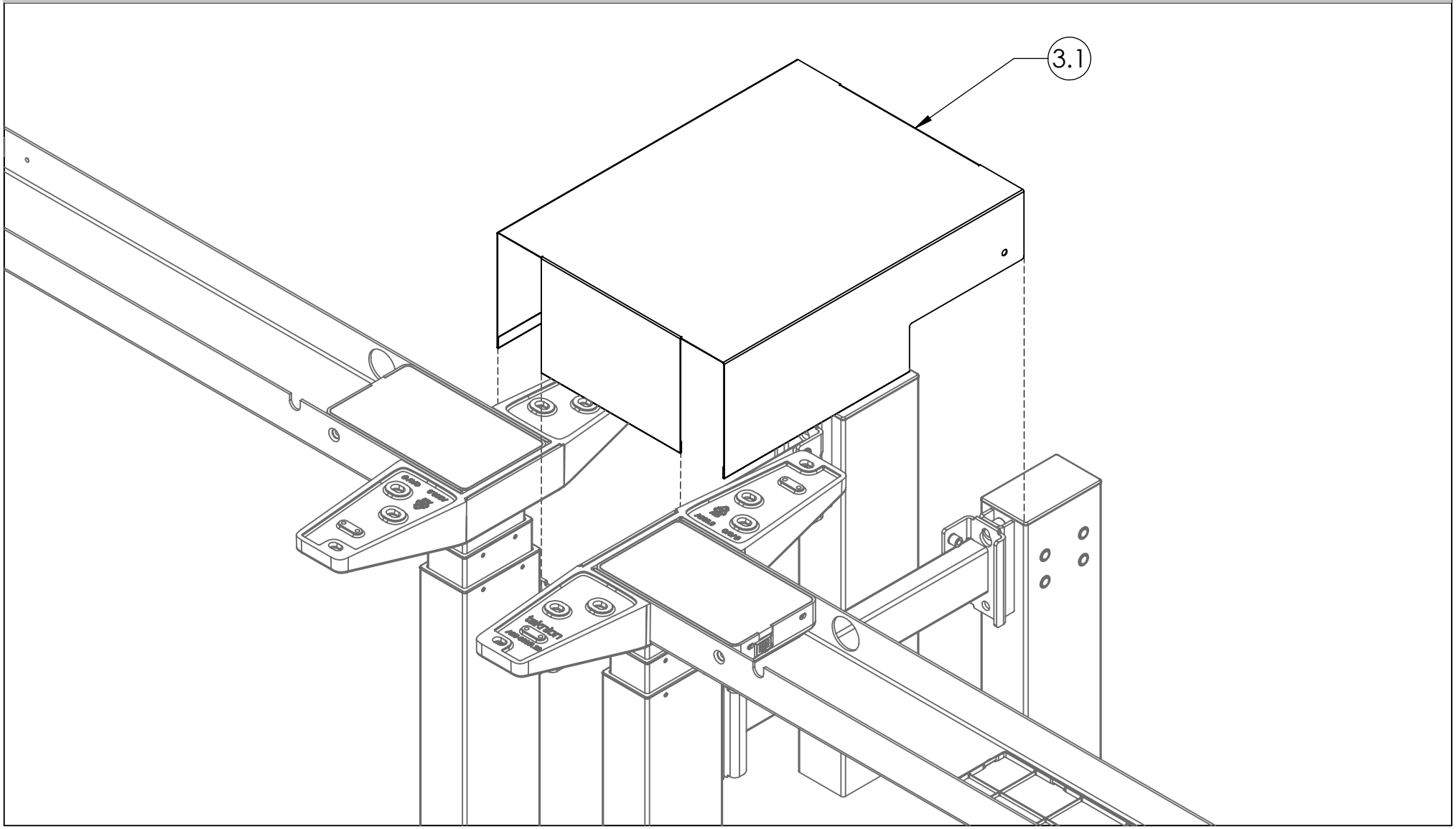

STEP 3: Place Mid-Gable Cover as shown above.

NAVIGATE SINGLE-SIDED END SCREEN COVER (HNBCCSMS), NAVIGATE SINGLE-SIDED END OF RUN SCREEN - FABRIC (HNBTSF)

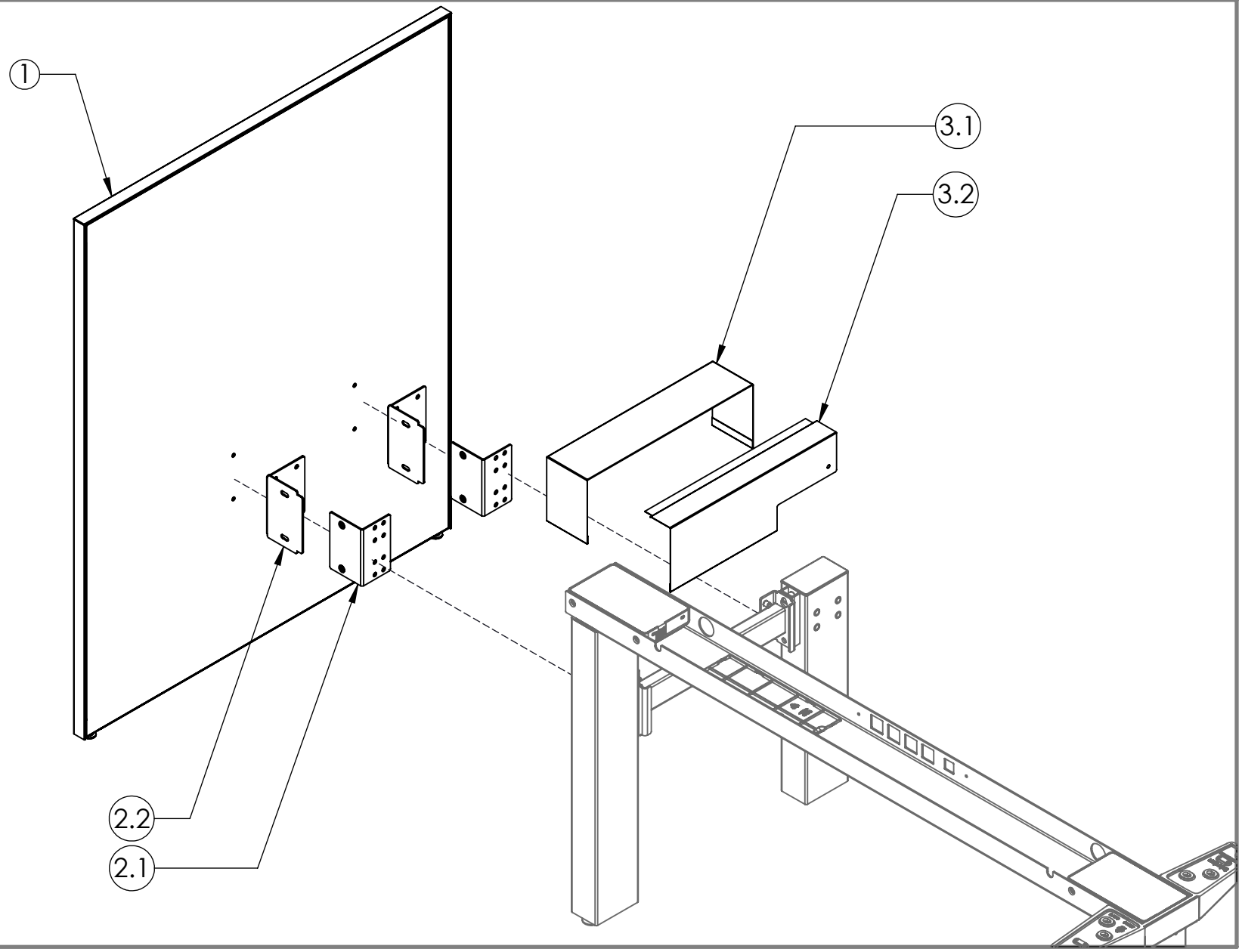

Part & Product Identification

ITEM NO.	PREVIEW	DESCRIPTION	PART NUMBER	QTY.
1	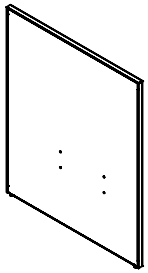	NAVIGATE END OF RUN FABRIC SCREEN SS HAB	HNBTSF-X	1
2. FABRIC END SCREEN MOUNTING BRKT KIT, SINGLE SIDED, HAB (X06-0618) x1				
2.1	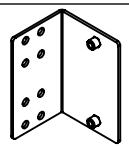	END SCREEN BRKT ASSY, INNER, SINGLE SIDED, HAB	N09-9207	2
2.2	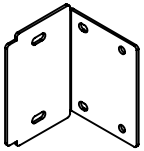	END SCREEN BRKT, OUTER, HAB	A16-7728	2
2.3	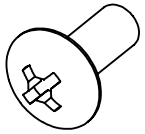	1/4-20X5/8" MACH SCR, BLACK, QUAD,TRUSS	E01-0113	12
3. NAVIGATE END SCREEN COVER, SINGLE SIDED, HAB (HNBCCSMS) x1				
3.1	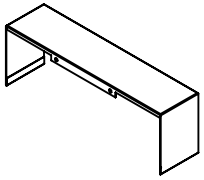	TOP COVER FOR END SCREEN COVER, SINGLE SIDED, HAB	A16-7759-X	1
3.2	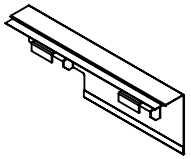	INSIDE COVER WELDMENT FOR END SCREEN COVER, SINGLE SIDED, HAB	N09-9106-X	1

ATTACH BRACKETS TO SCREEN

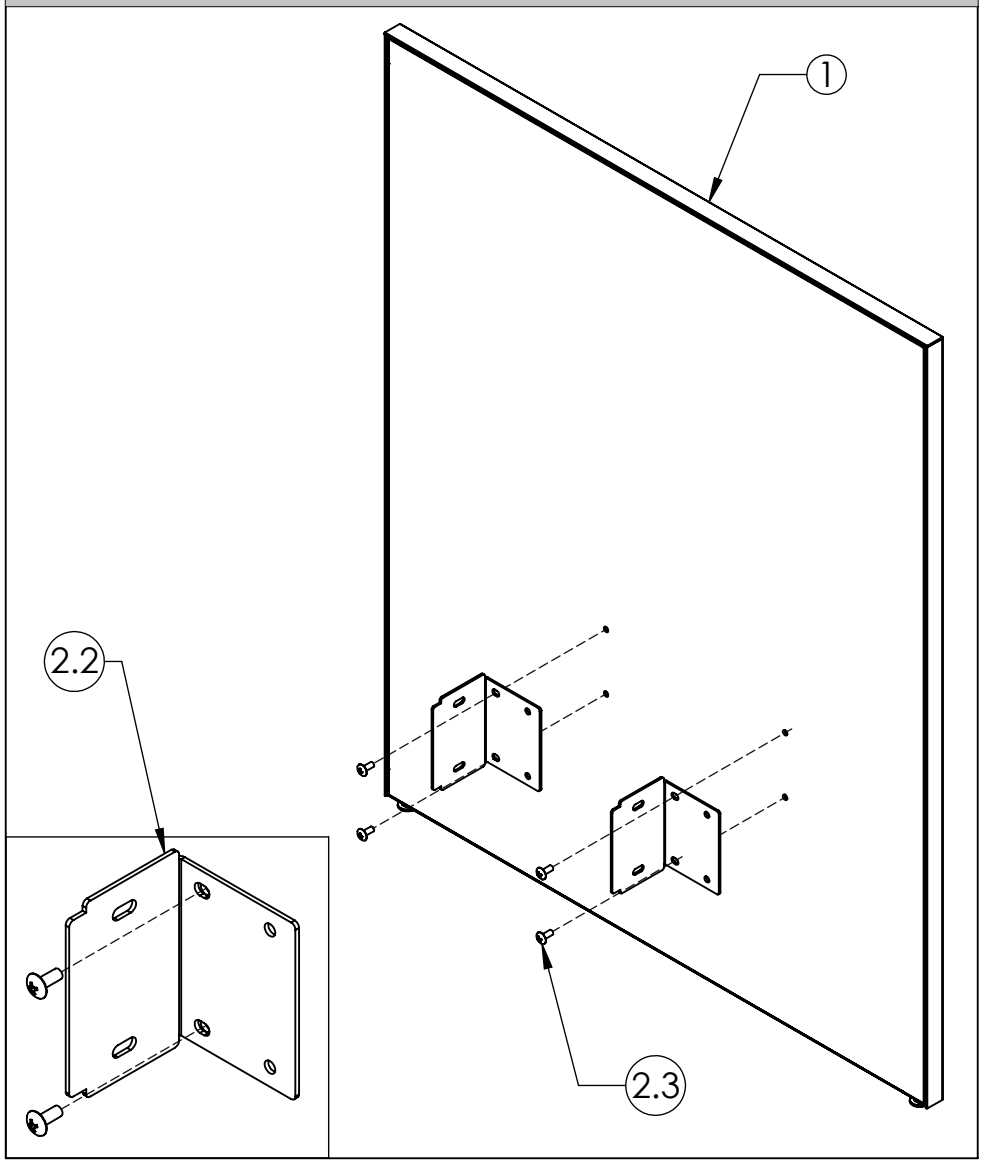

STEP 1: Attach Outer Brackets to Screen using Screws provided.

ATTACH BRACKETS TO FRAME

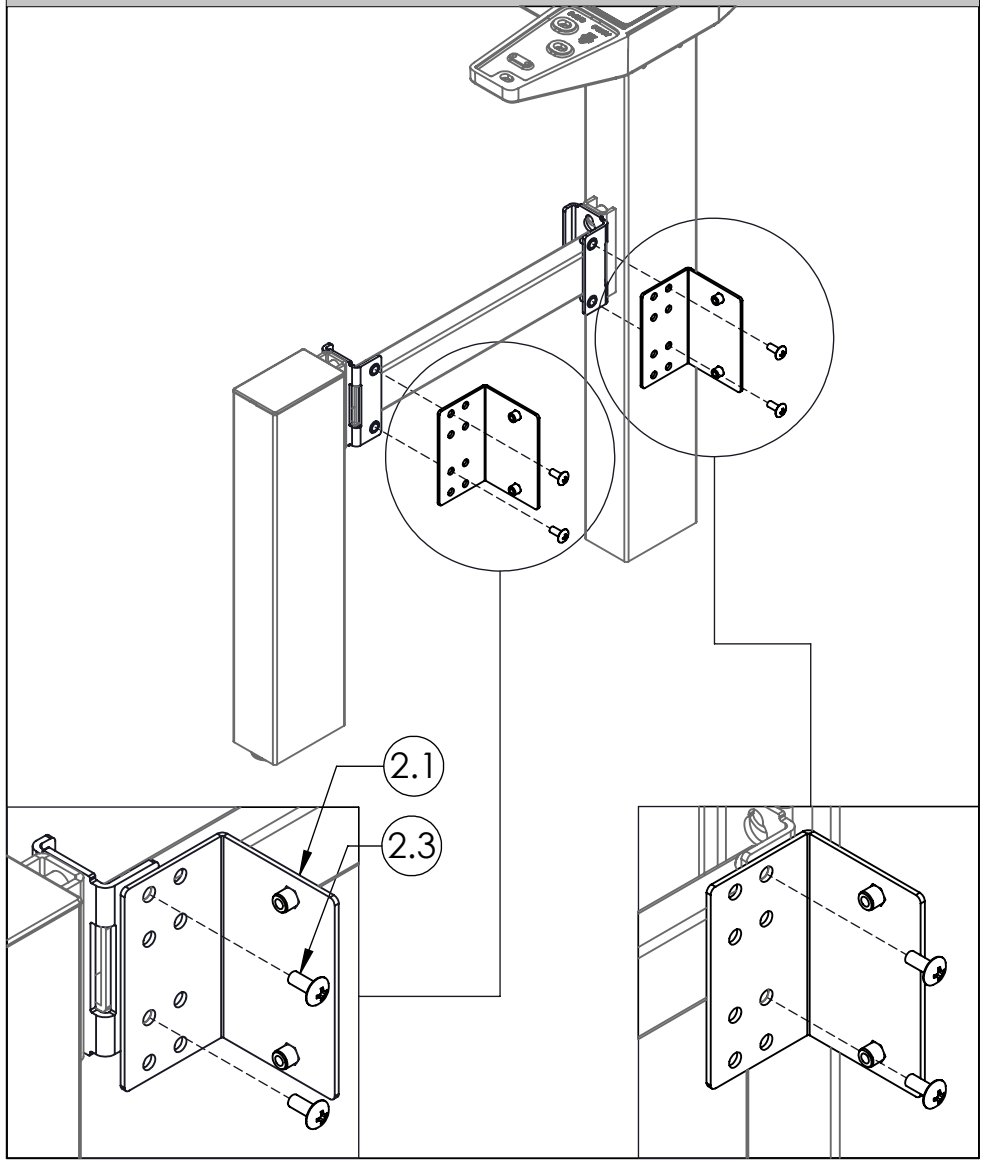

STEP 2: Attach Inner Brackets to Frame using Screws provided.

ATTACH SCREEN TO FRAME (WITH CORRIDOR SCREEN ONLY)

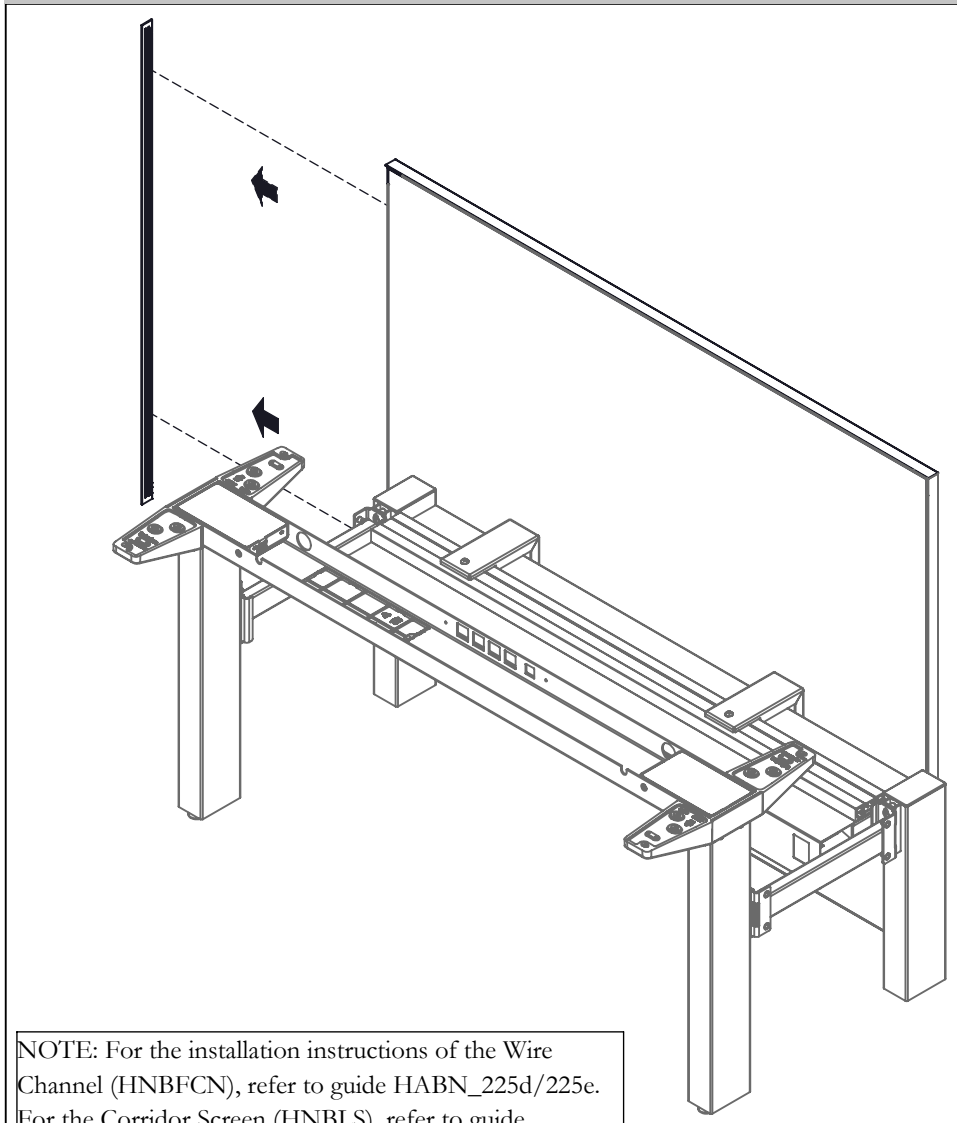

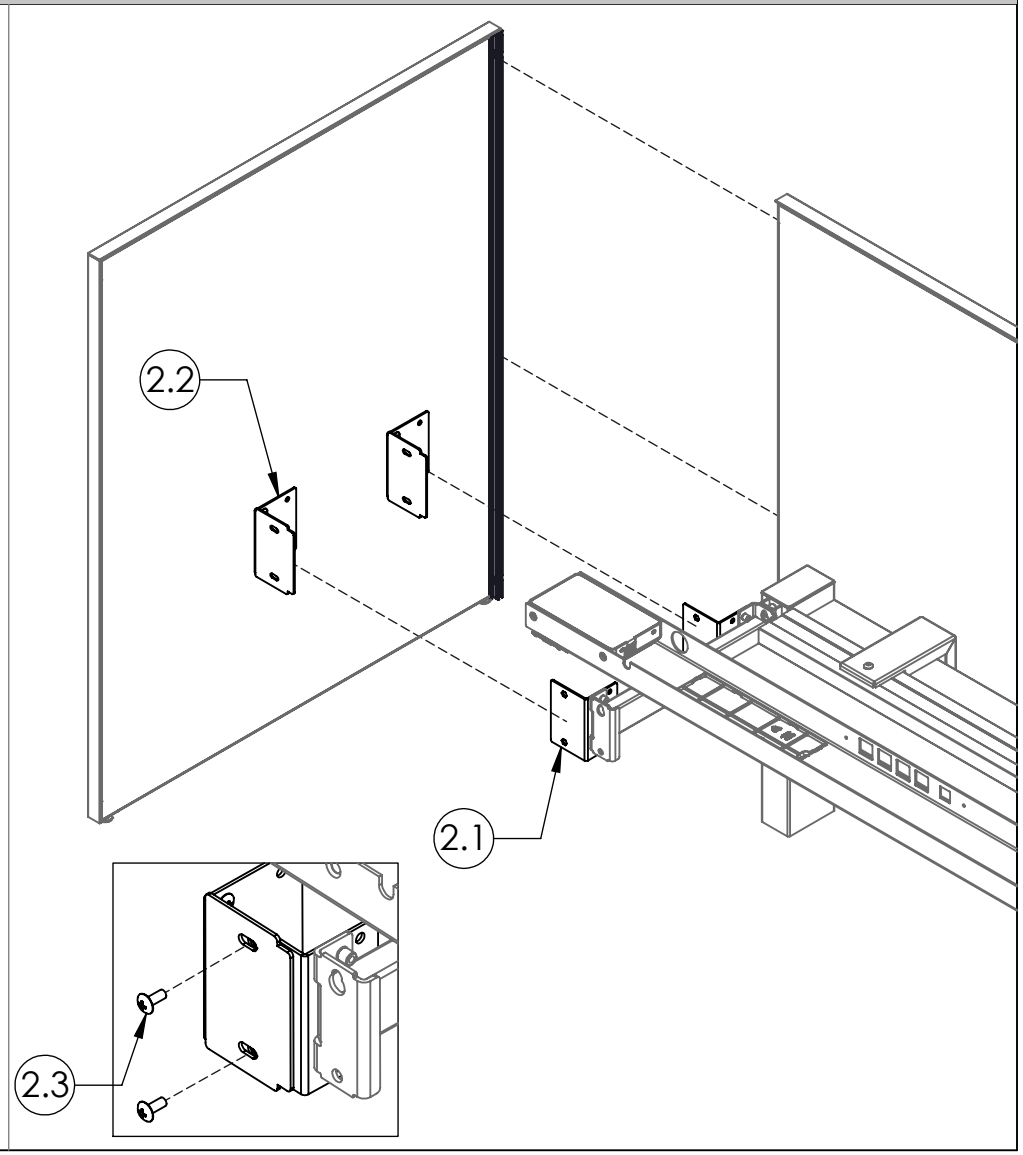

NOTE: For the installation instructions of the Wire Channel (HNBFCN), refer to guide HABN_225d/225e. For the Corridor Screen (HNBLS), refer to guide HAB_224.

STEP 3: If a Corridor Screen has already been installed, remove the End Trim from the Corridor Screen, and attach the End-of-Run Screen to the Frame using the Screws provided and by connecting the Corner Connecting Trim to the the Corridor Screen.

ATTACH SCREEN TO FRAME

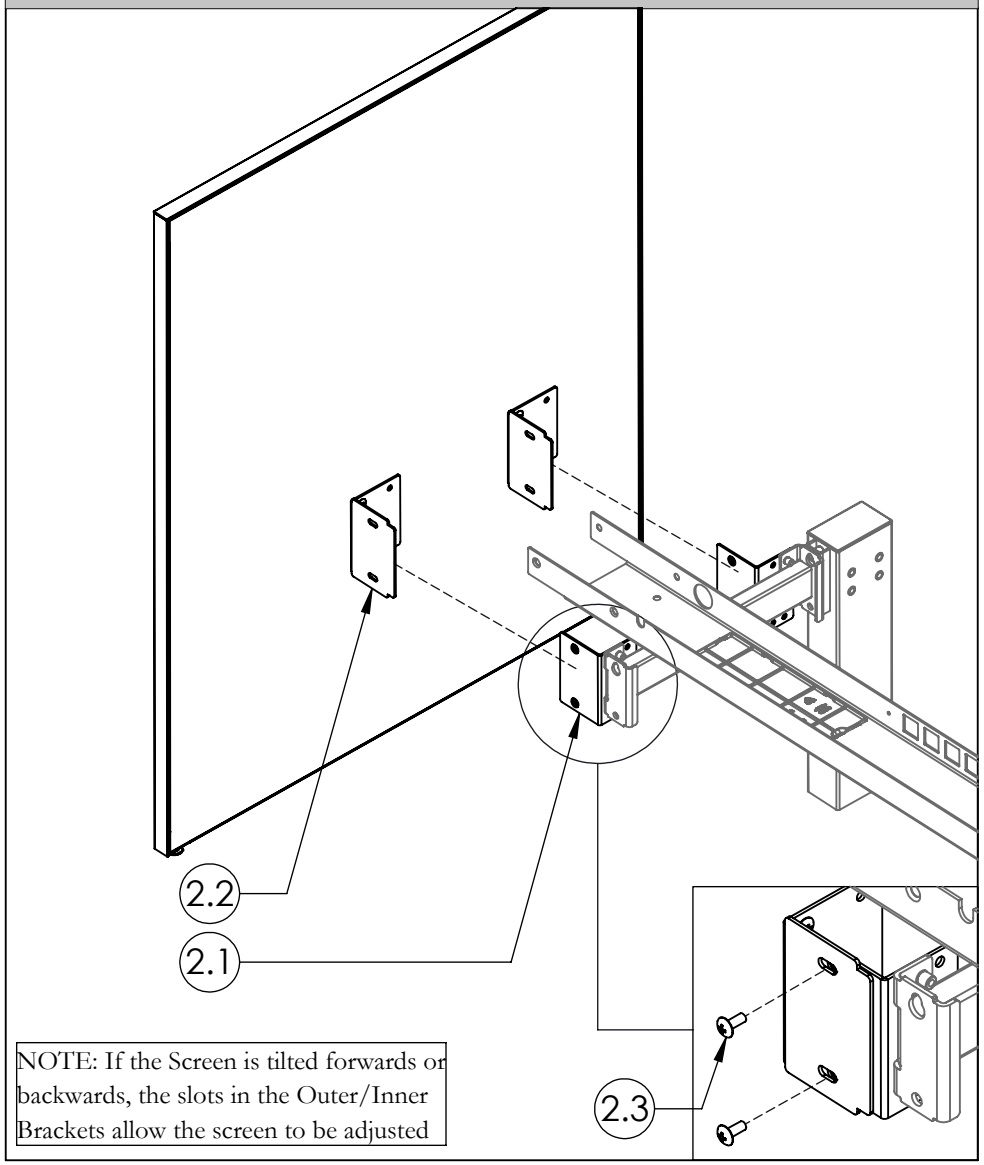

NOTE: If the Screen is tilted forwards or backwards, the slots in the Outer/Inner Brackets allow the screen to be adjusted

STEP 4: Attach the End Screen to the Frame using the Screws Provided.

PLACE INSIDE COVER ON FRAME

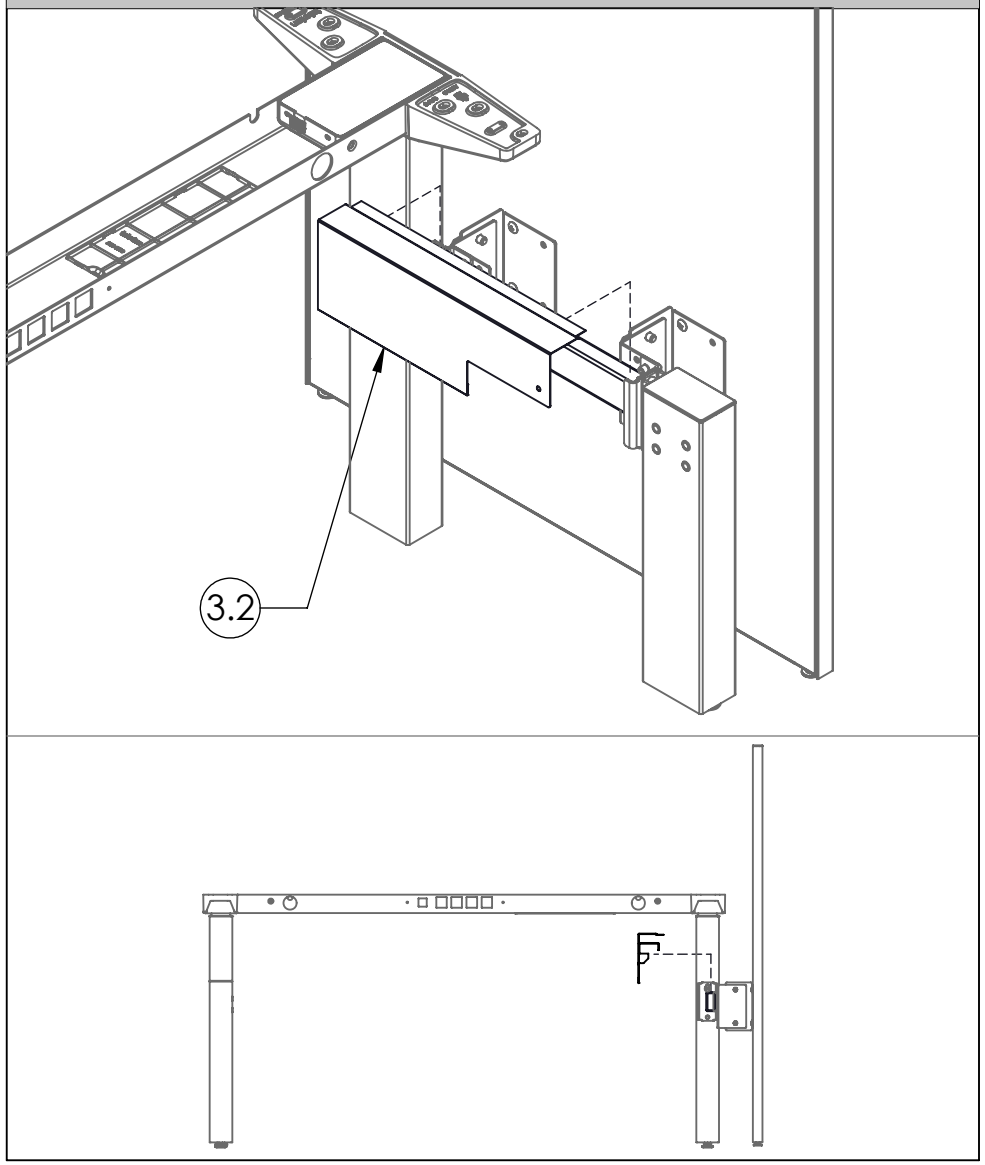

STEP 5: Place the Inside Cover on the Frame. Ensure the Inside Cover Brackets are mounted properly.

PLACE TOP COVER IN POSITION

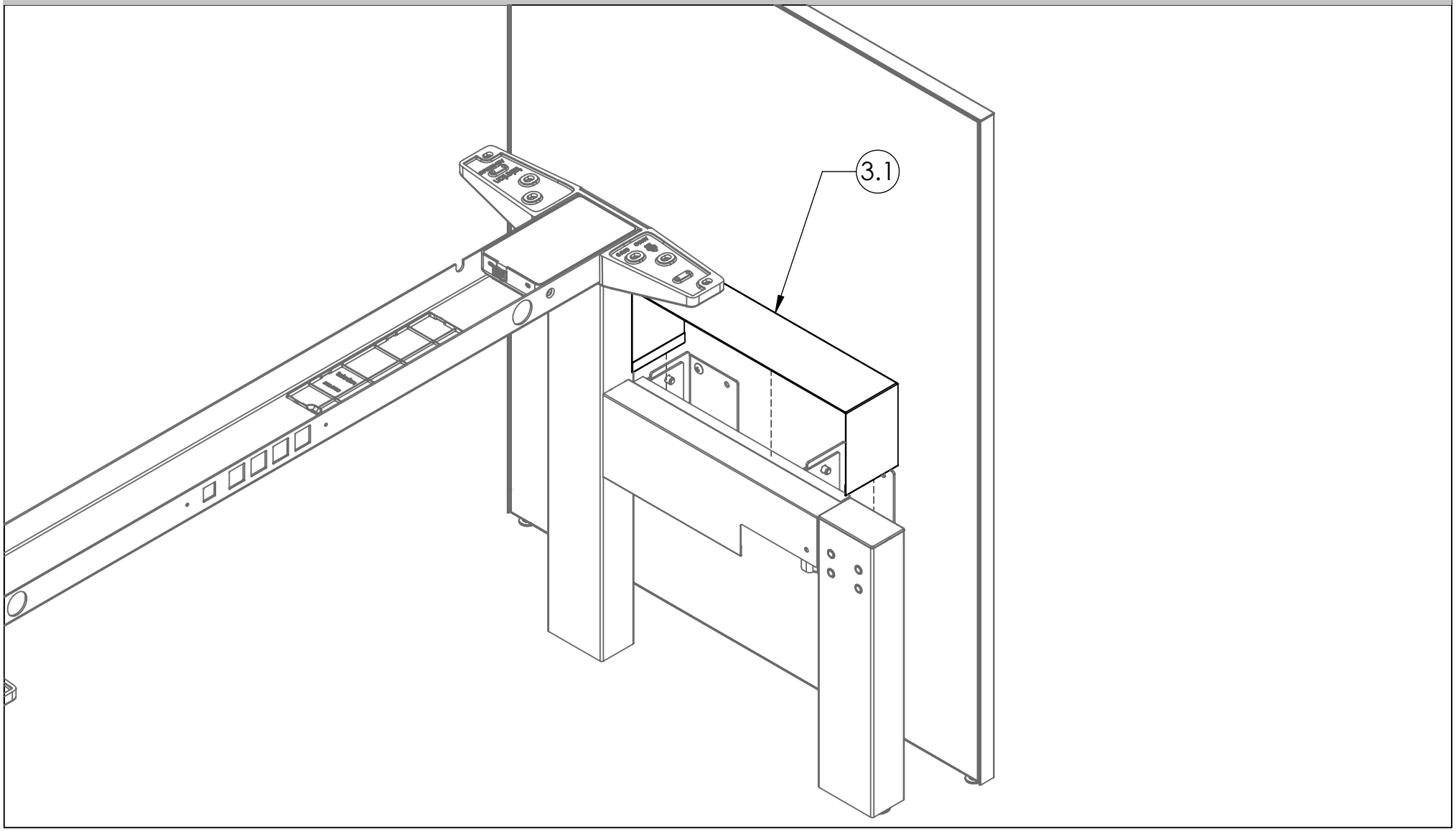

STEP 6: Place Top Cover on top of the Inside Cover

NAVIGATE SINGLE-SIDED END OF RUN SCREEN GABLE (HNBCGSMS), NAVIGATE SINGLE-SIDED END OF RUN SCREEN - SOLID (HNBTSS)

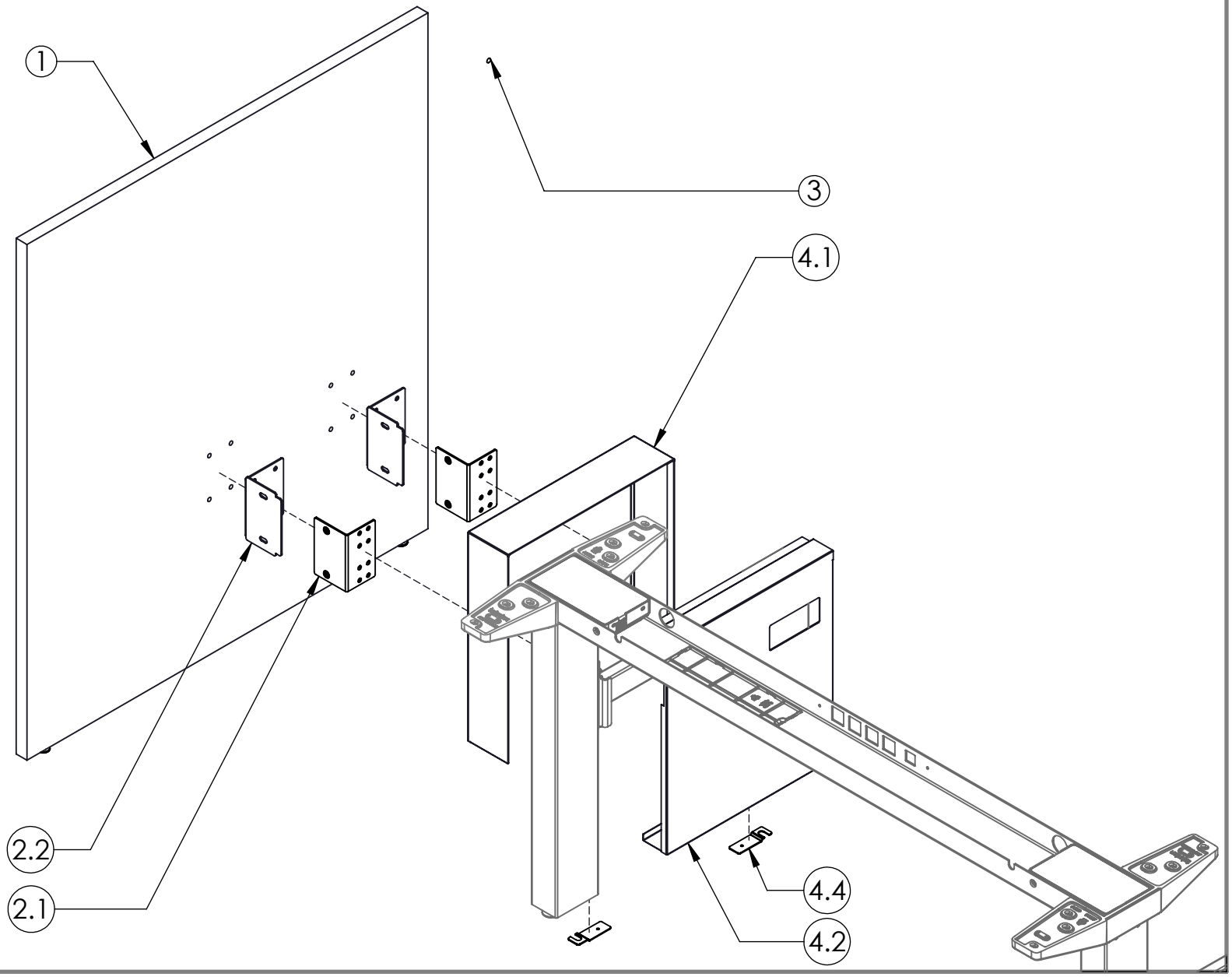

Part & Product Identification

ITEM NO.	PREVIEW	DESCRIPTION	PART NUMBER	QTY.
1	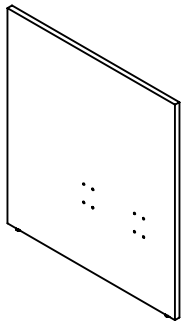	NAVIGATE END SCREEN, SOLID, SINGLE SIDED, HAB	HNBTSS-X	1
2. SOLID END SCREEN MOUNTING BRKT KIT, SINGLE SIDED, HAB (N09-9207) x1				
2.1	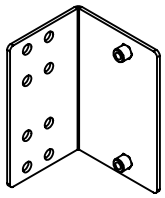	END SCREEN BRKT ASSY, INNER, SINGLE SIDED, HAB	N09-9207	2
2.2	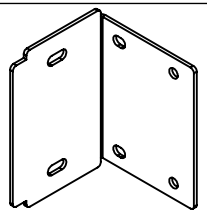	END SCREEN BRKT, OUTER, HAB	A16-7728	2
2.3	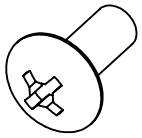	1/4-20X5/8" MACH SCR, BLACK, QUAD,TRUSS	E01-0113	16

ITEM NO.	PREVIEW	DESCRIPTION	PART NUMBER	QTY.
3		STICK ON CLEAR BUMPER	D04-0050	1
4. NAVIGATE END SCREEN GABLE, SINGLE SIDED, HAB (HNBCGSMS) x1				
4.1	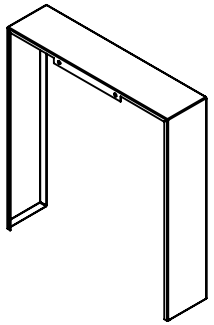	TOP COVER FOR END SCREEN GABLE, SINGLE SIDED, HAB	A16-7800\30	1
4.2	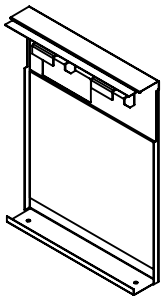	INSIDE COVER ASSY. FOR END SCREEN GABLE, HAB	N09-9142L-X	1
4.3	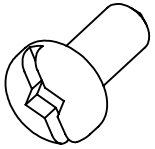	#10X1/2" TAP SCR, QUAD,PAN	E01-0023	2
4.4	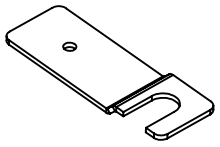	GABEL CONNECTING PLATE	A16-3651	2

ATTACH OUTER BRACKETS TO SCREEN

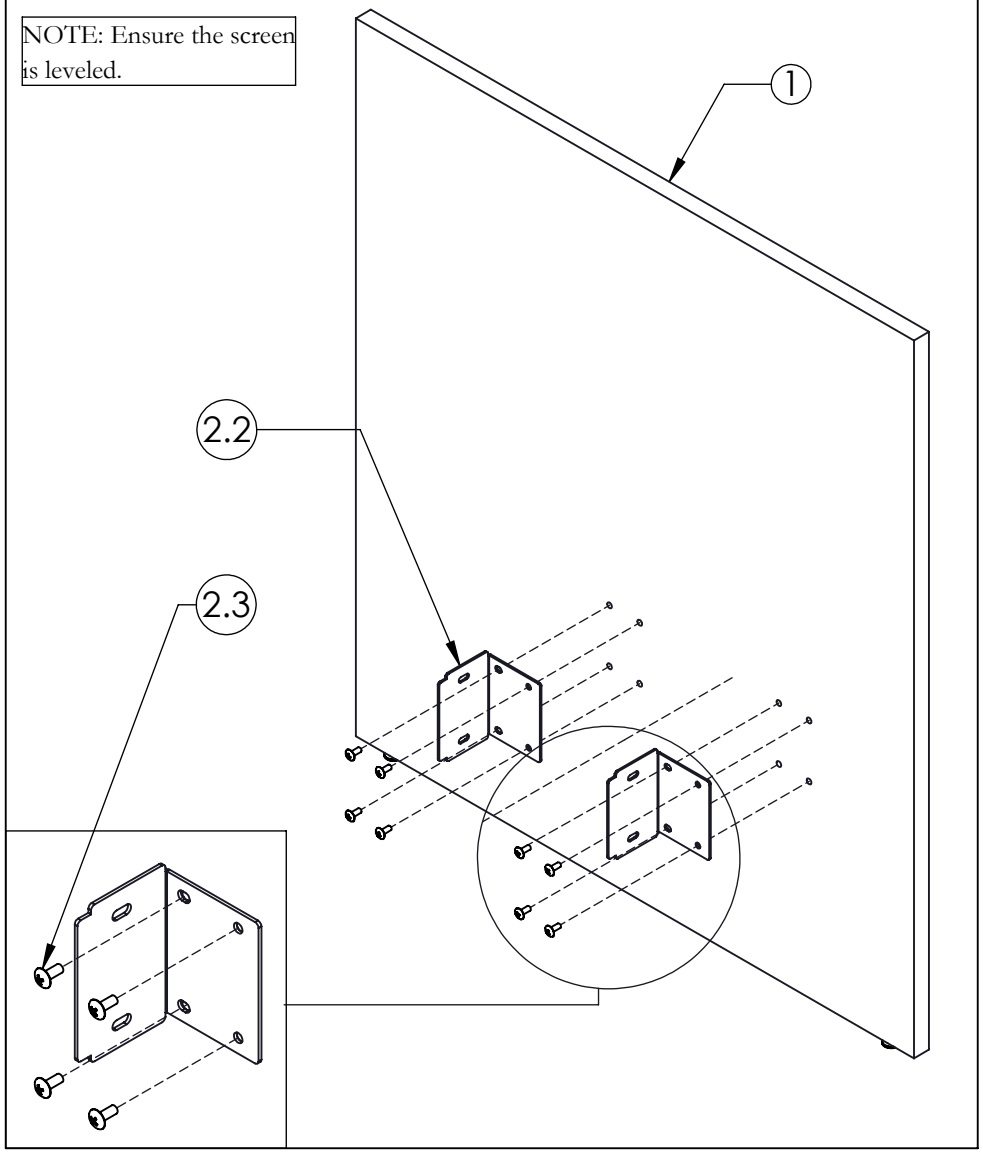

STEP 1: Attach Outer Brackets to the End Screen using Screws provided.

ATTACH GABLE CONNECTORS TO LEGS

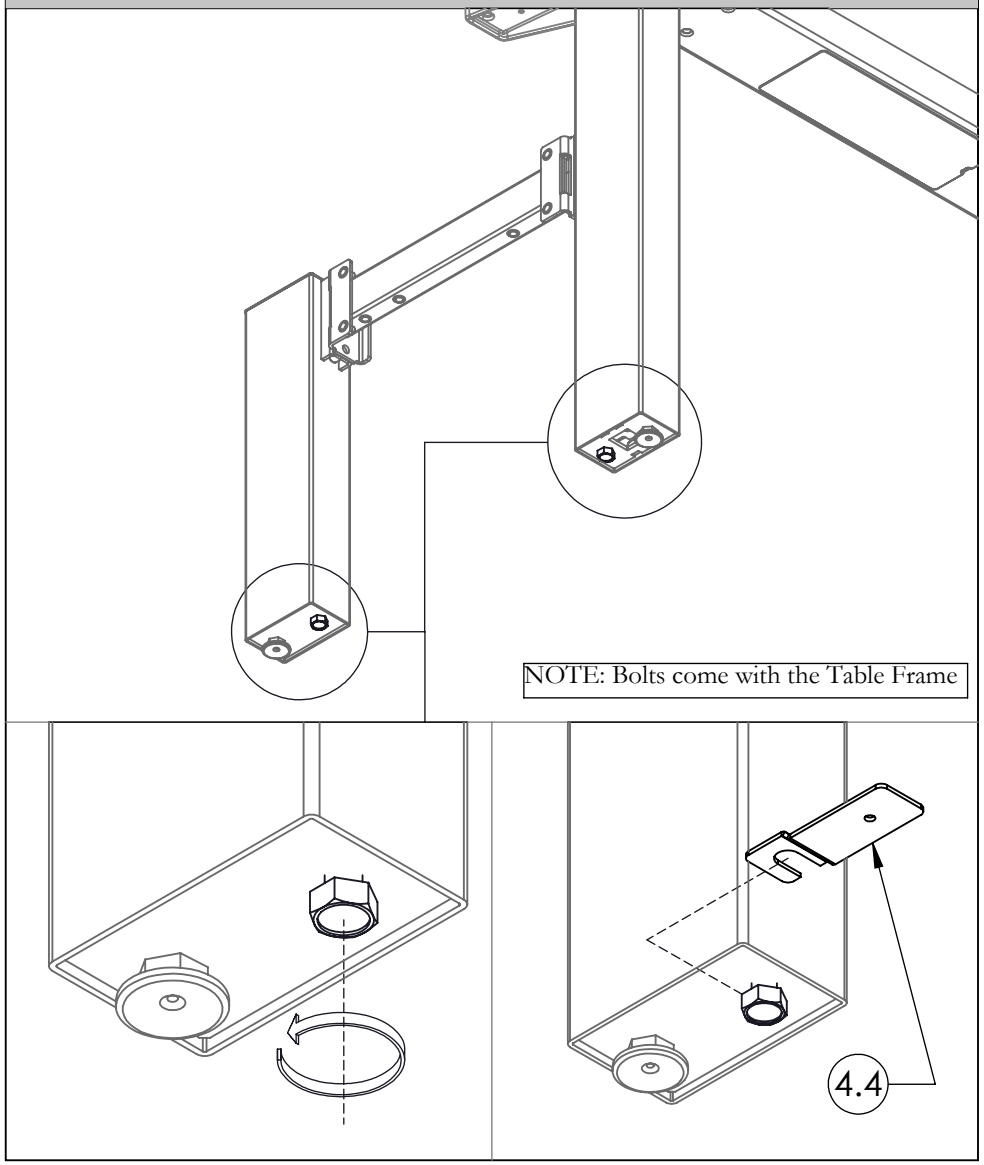

STEP 2: Loosen Bolts that come with the Table Frame, and slide the Gable Connectors to the underside of the legs.

PLACE INSIDE COVER ON FRAME

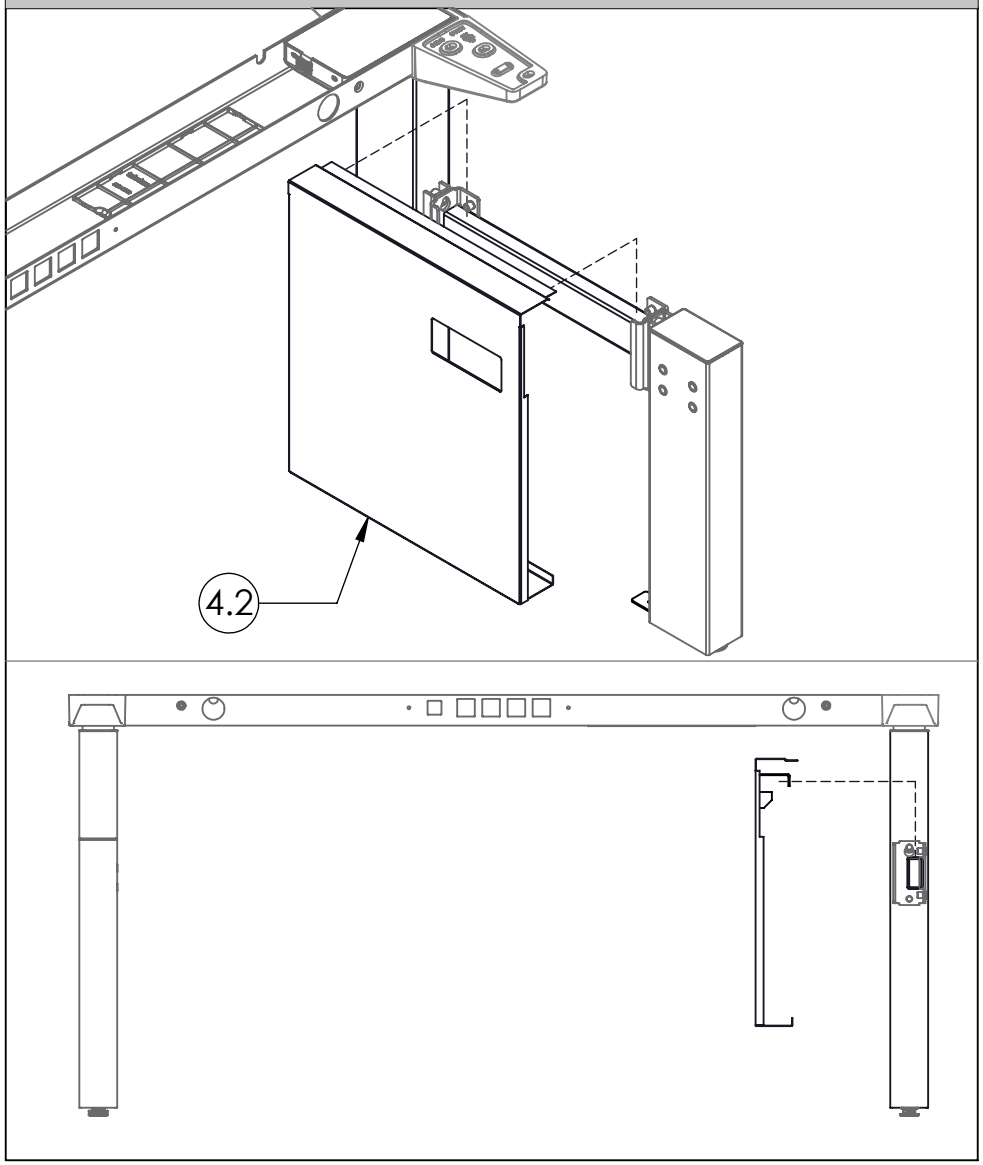

STEP 3: Place the Inside Cover on the Frame. Ensure the Inside Cover Brackets are mounted properly.

SECURE INSIDE COVER TO CONNECTOR

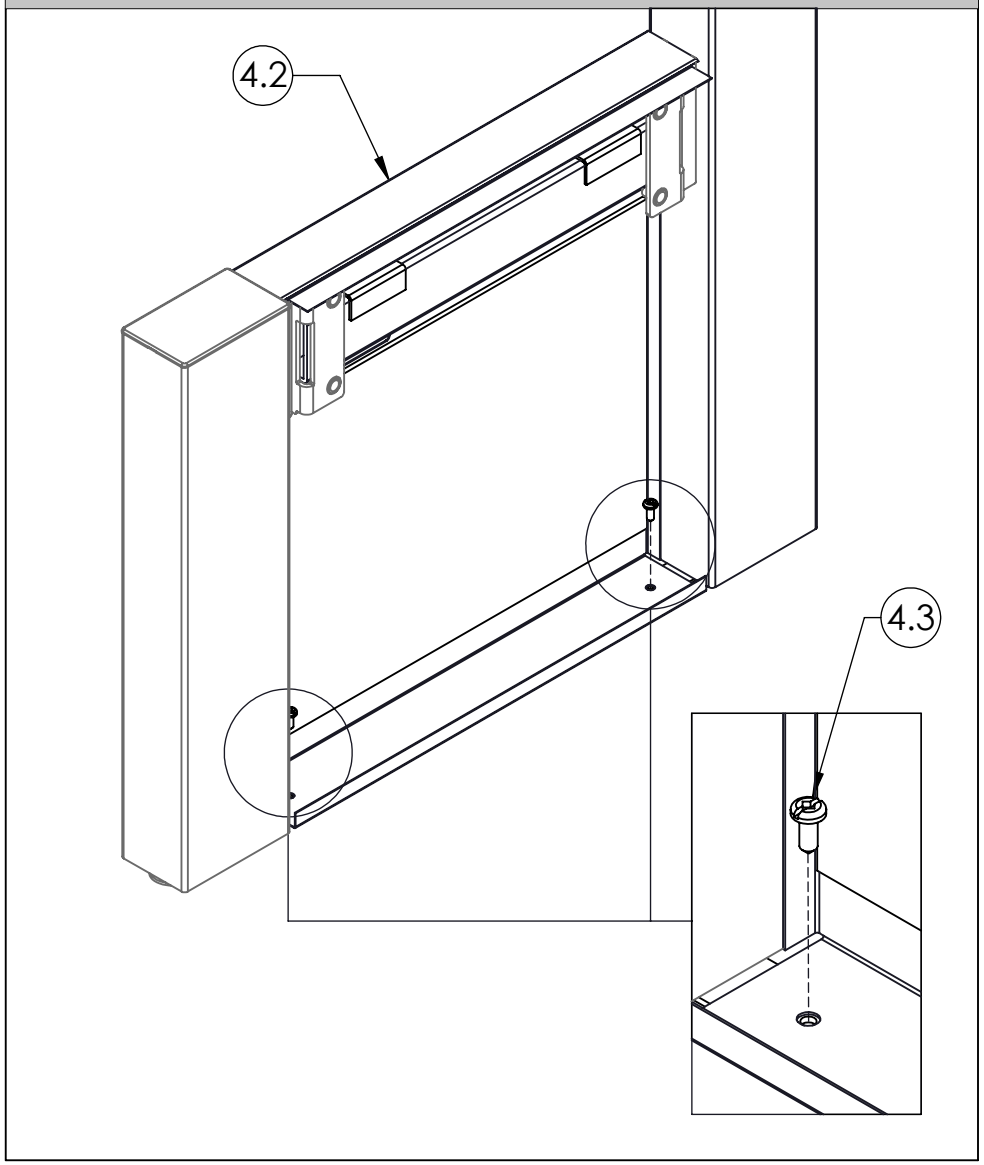

STEP 4: Use Screws provided to secure the Inside Cover to the Gable Connector.

ATTACH BRACKETS TO FRAME

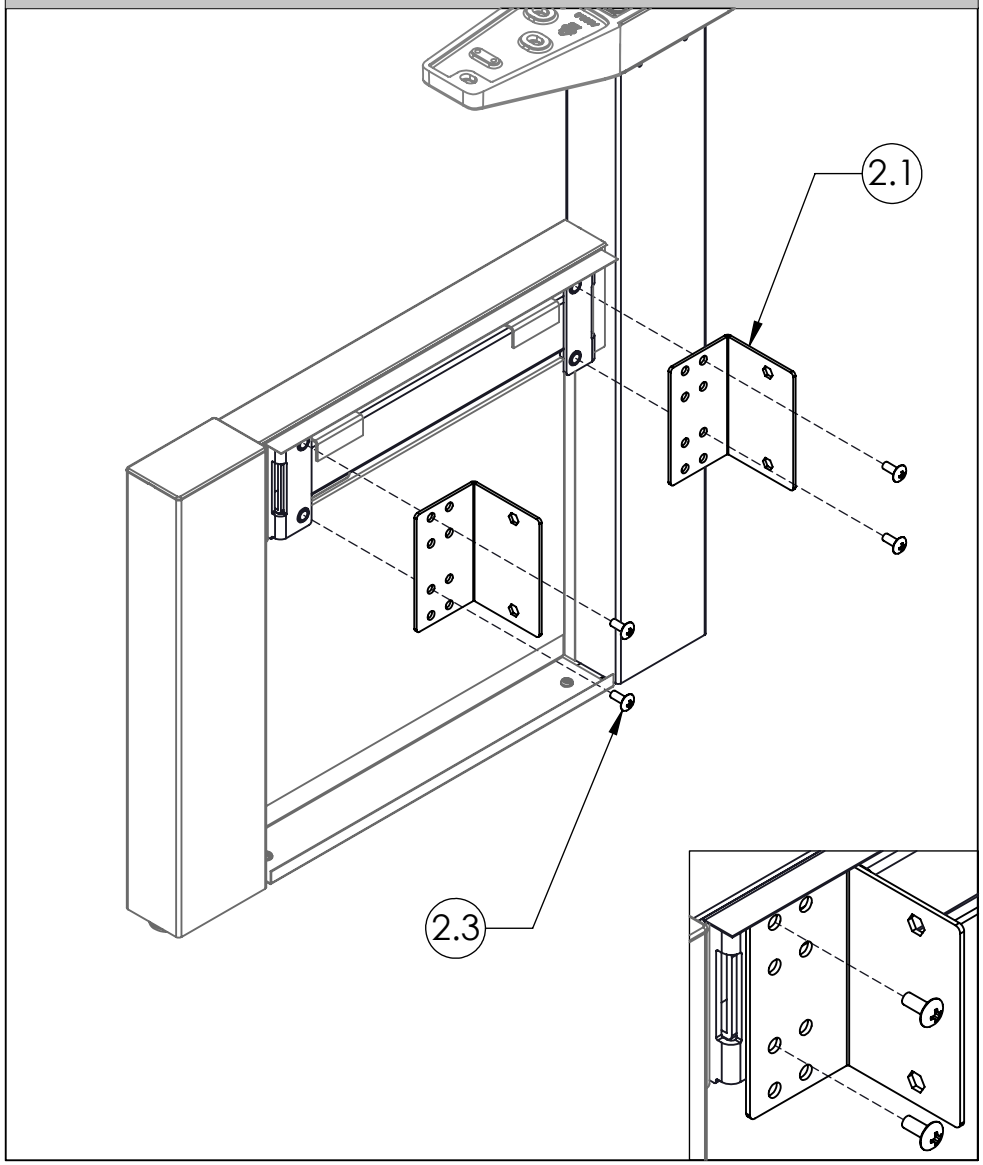

STEP 5: Secure Inner Bracket to Frame using the Screws provided.

ATTACH BUMPER (OPTIONAL)

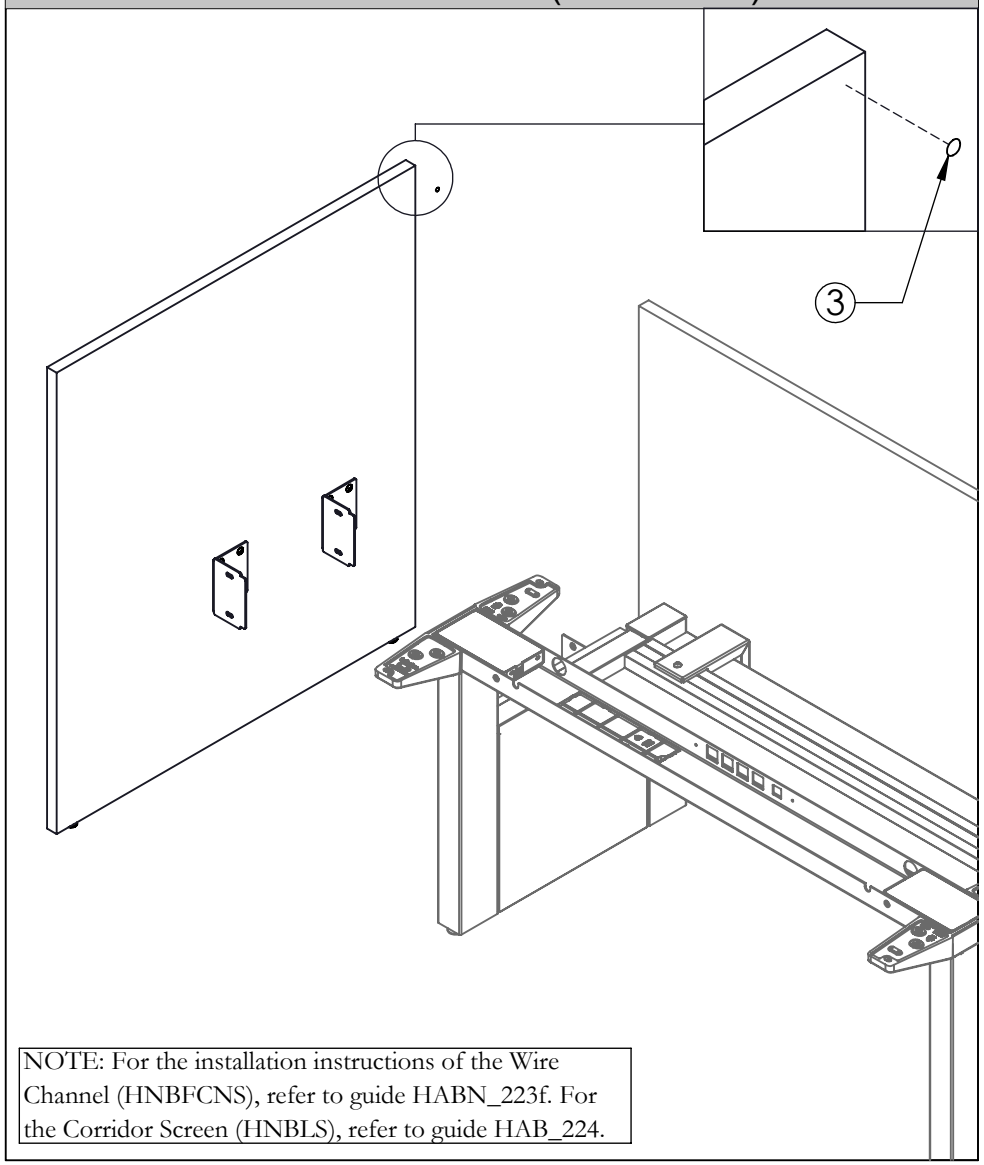

NOTE: For the installation instructions of the Wire Channel (HNBFCNS), refer to guide HABN_223f. For the Corridor Screen (HNBLS), refer to guide HAB_224.

STEP 6: If a Corridor Screen is installed, place the Stick-On Clear Bumper on the Screen.

ATTACH END SCREEN TO FRAME

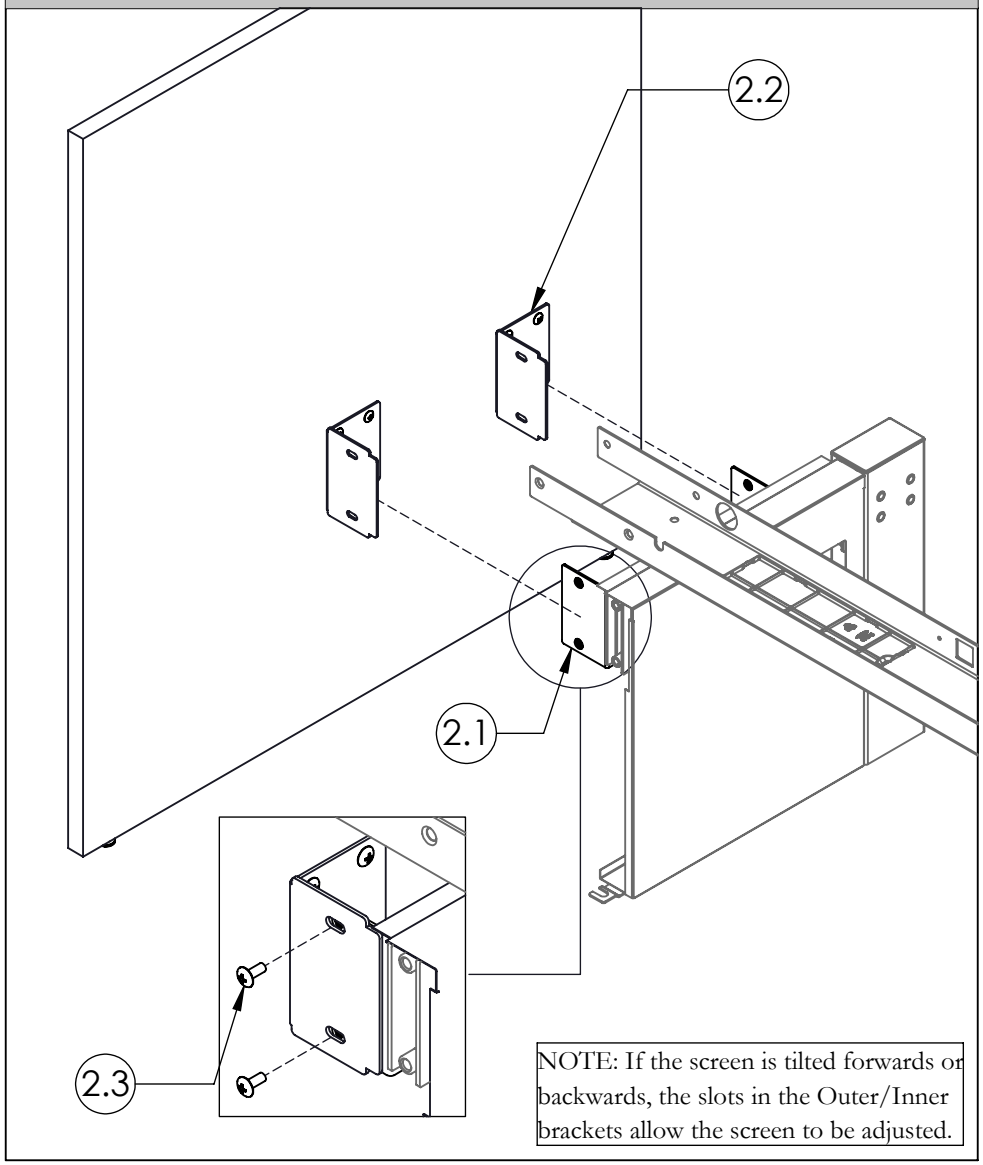

STEP 7: Attach the End Screen to the Frame using the Screws provided.

PLACE TOP COVER ON FRAME

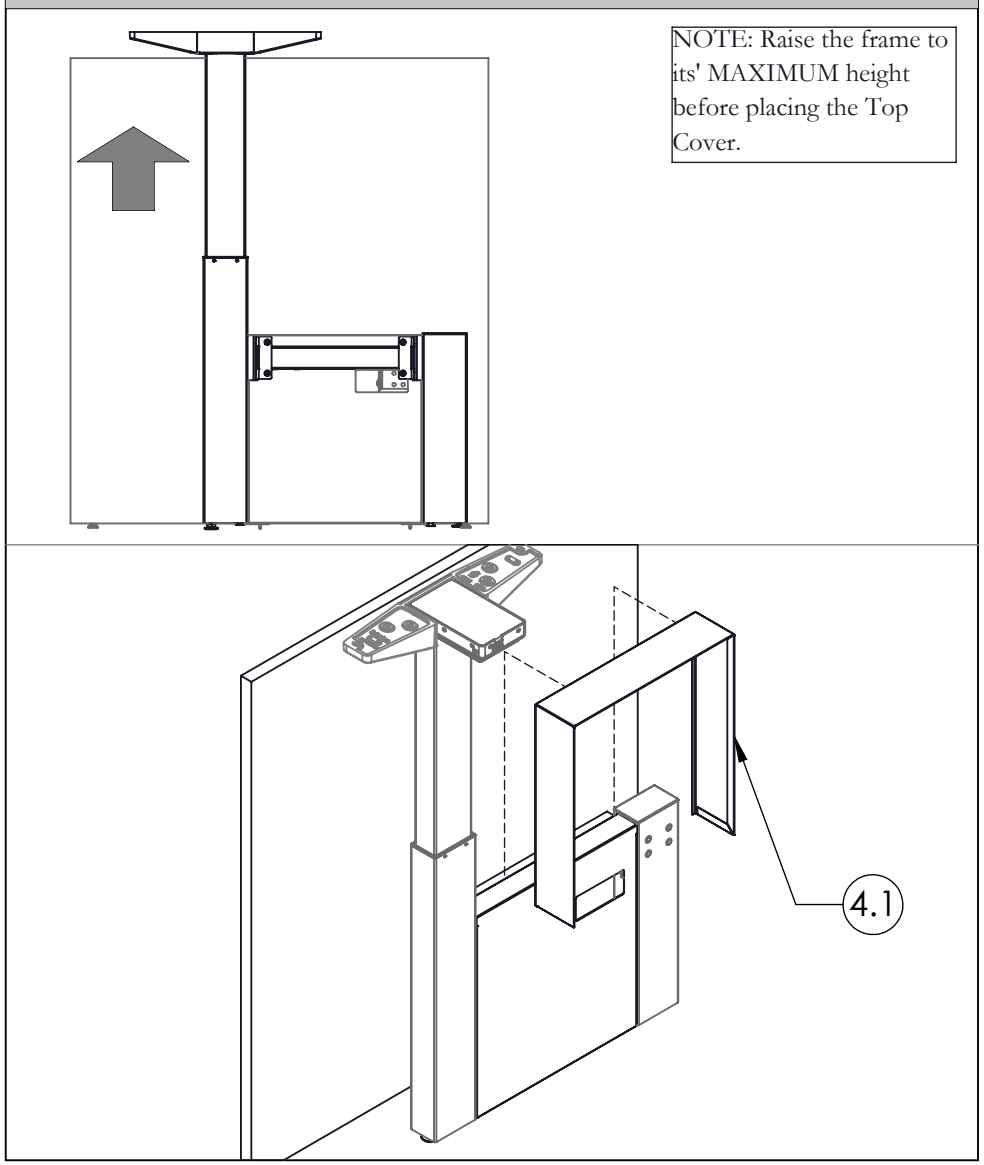

STEP 8: Raise the height of the Frame, then place the Top Cover of the Gable on top of the Assembly.

Navigate Single-Sided End Gable - Metal (HNBCGEMS), Navigate Single-Sided Mid Gable - Metal (HNBCGMMS)

HNBCGEMS shown

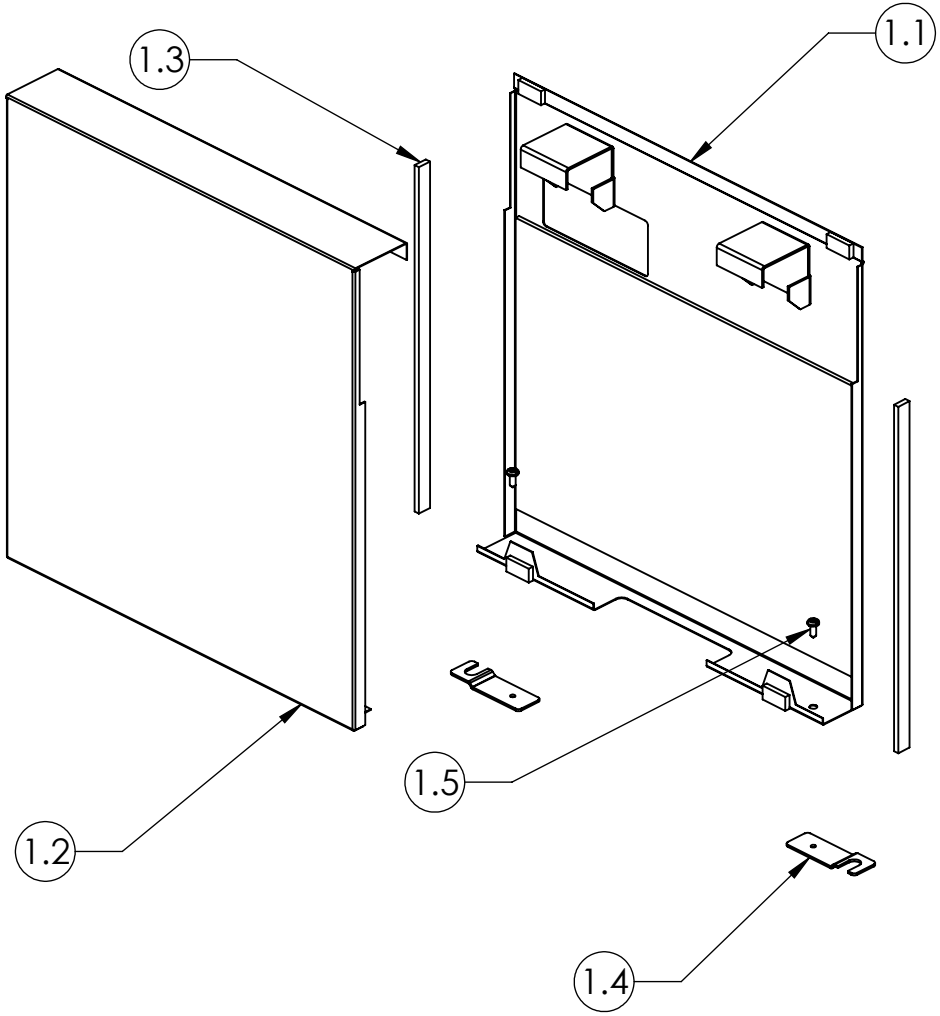

HNBCGMMS shown

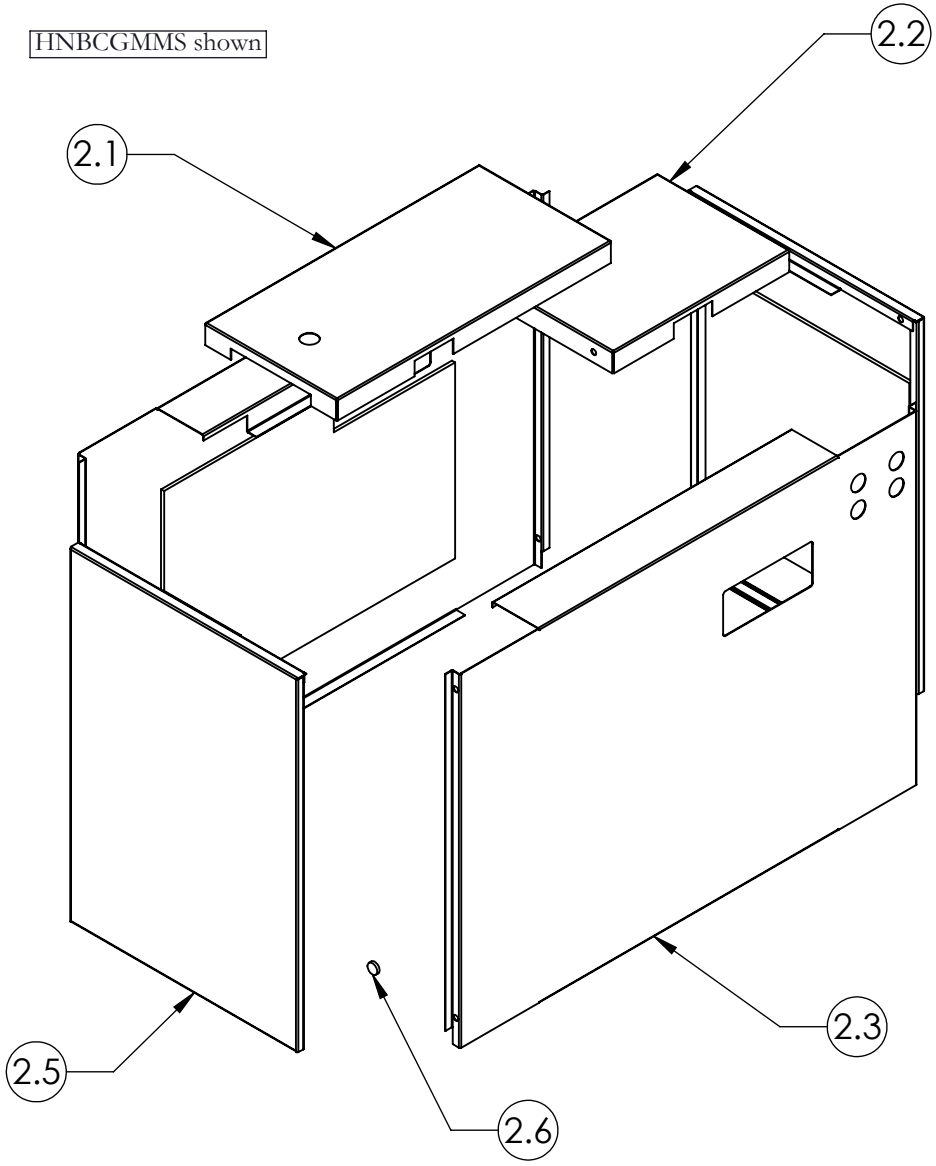

Part & Product Identification

ITEM NO.	PREVIEW	DESCRIPTION	PART NUMBER	QTY.
1. NAVIGATE END GABLE, METAL, SINGLE SIDED, HAB (HNBCGEMS)				
1.1	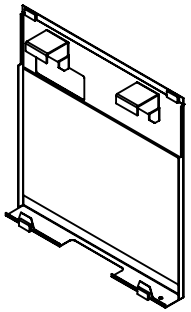	INSIDE COVER ASSY FOR METAL END GABLE, SINGLE SIDED, HAB	N09-8863L\30	1
1.2	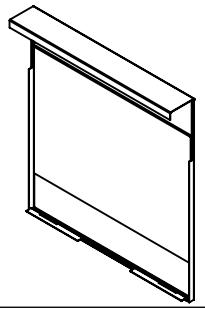	OUTSIDE COVER ASSY FOR METAL END GABLE, SINGLE SIDED, HAB	N09-8864\30	1
1.3	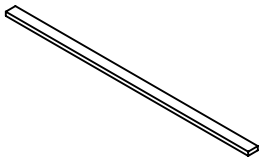	2A1 FOAM RUBBER 3/16 THICK 1/2" WIDE 12.5" LONG, GREY CLOSED CELL	E08-0135	2
1.4	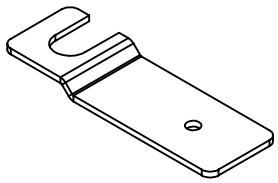	GABEL CONNECTING PLATE	A16-3651	2
1.5	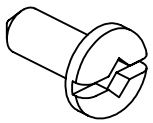	#10X1/2" TAP SCR, QUAD,PAN	E01-0023	2

ITEM NO.	PREVIEW	DESCRIPTION	PART NUMBER	QTY.
2. NAVIGATE MID GABLE, METAL, SINGLE SIDED, HAB (HNBCGMMS)				
2.1	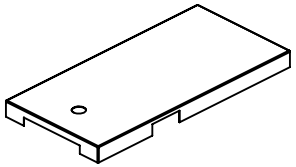	TOP COVER FOR METAL MID GABLE W/POWER POLE, DOUBLE SIDED, HAB	A16-7491\60	1
2.2	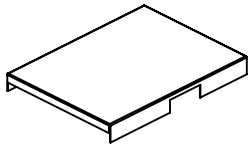	BACK TOP COVER FOR METAL MID GABLE, SINGLE SIDED, HAB	A16-7566A	1
2.3	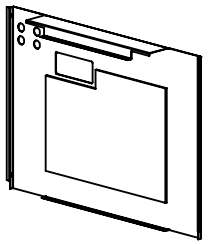	SIDE COVER ASSY FOR METAL MID GALBE, SINGLE SIDED, HAB	N09-8876AR\30	1
2.4	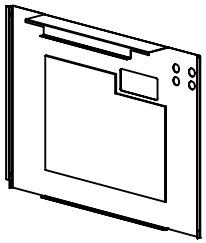	SIDE COVER ASSY FOR METAL MID GALBE, SINGLE SIDED, HAB	N09-8876AL\30	1
2.5	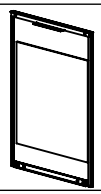	FRONT COVER ASSY FOR METAL MID GABLE, HAB	N09-5182	2
2.6	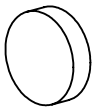	1/2" DIAMETER x 1/8" THICK CIRCULAR RARE EARTH MAGNET	D03-0059	4

ATTACH CONNECTING PLATES TO FRAME LEGS

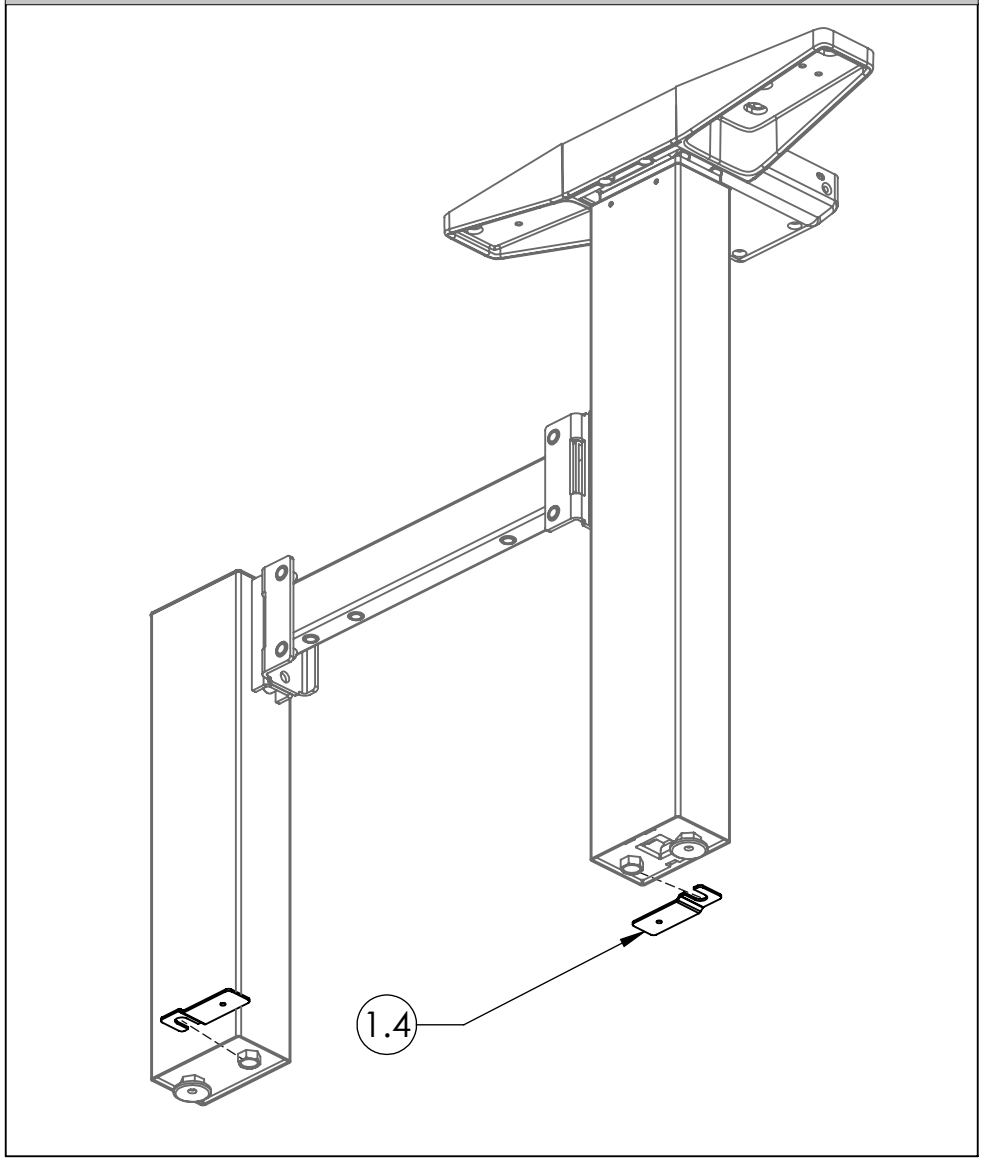

STEP 1: Loosen Leg Hex Bolt to attach Gable Connecting Plates to Frame leg. Then, Fasten the Hex Bolt.

MOUNT INSIDE COVER

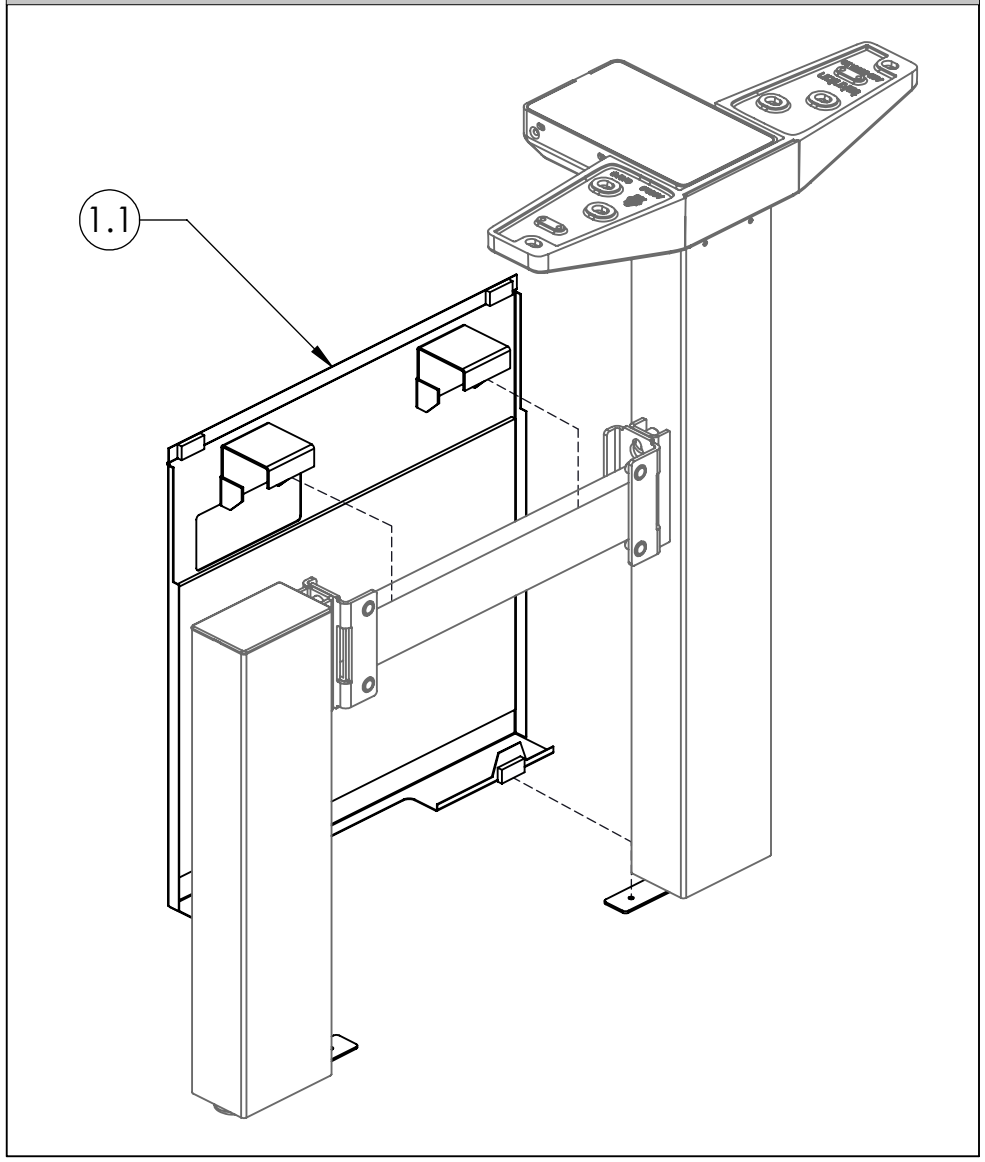

STEP 2:Mount Inside Cover Assembly onto Frame Stretcher Bar.

FASTEN INSIDE COVER IN PLACE

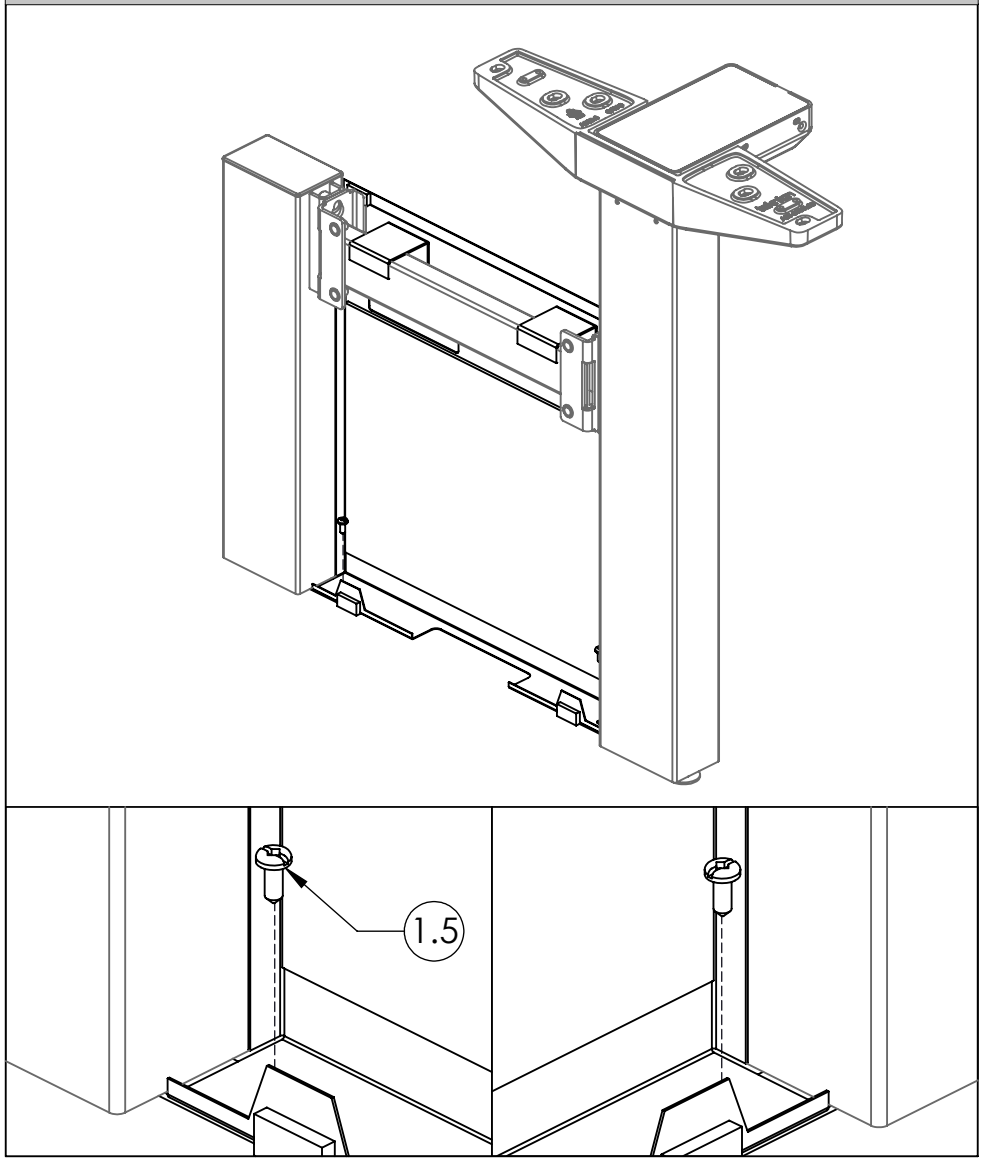

STEP 3: Make sure the face of the Inside Cover Assembly is flush with the Leg. Secure Inside Cover Assembly to Gable Connecting Plate on both side using Tap Quad Pan Screws provided.

APPLY FOAM RUBBERS

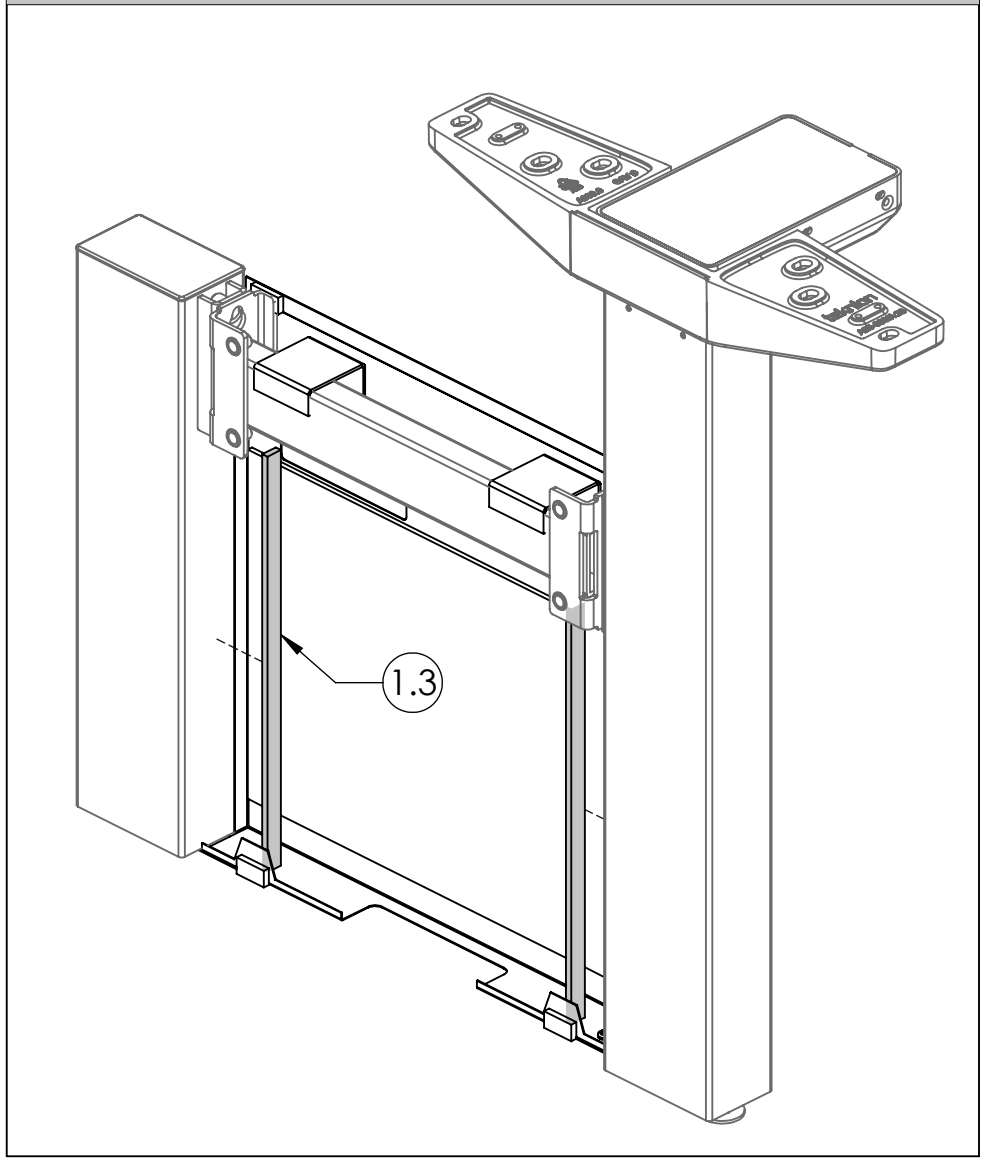

STEP 4: Attach Foam Rubbers onto the center of the Frame Legs' inner side.

MOUNT OUTSIDE COVER ASSEMBLY

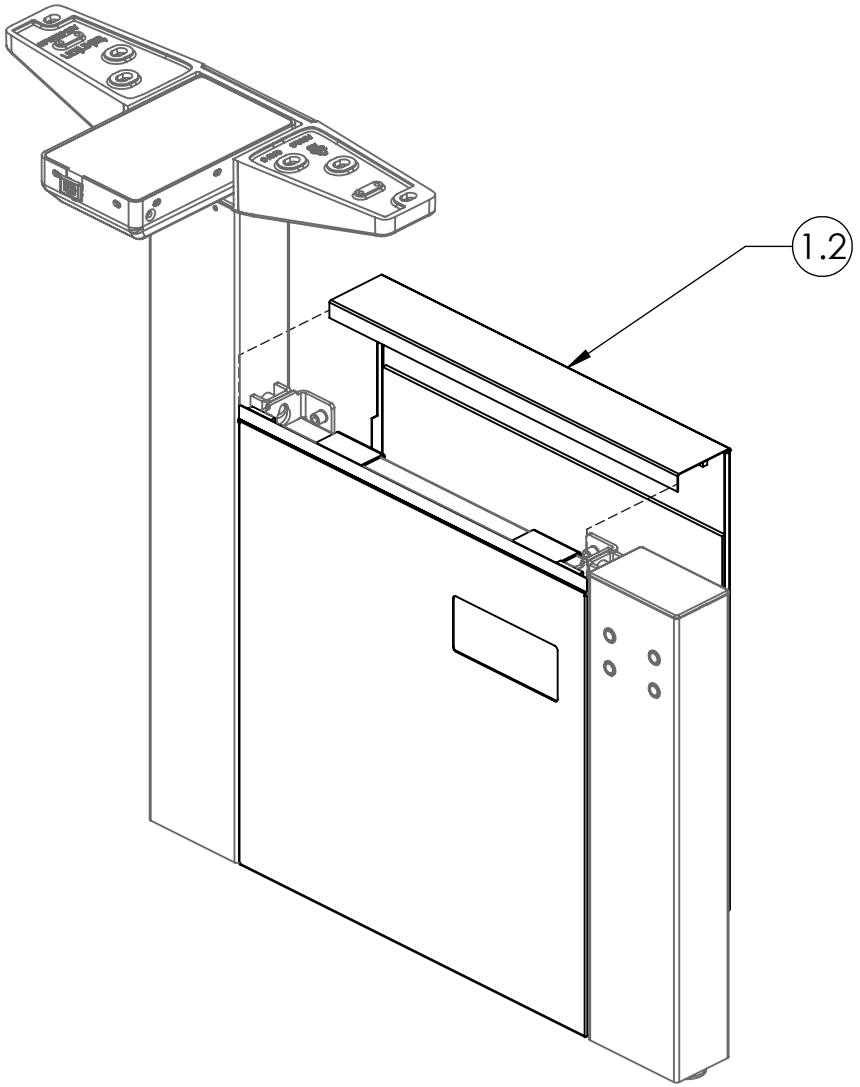

Side View

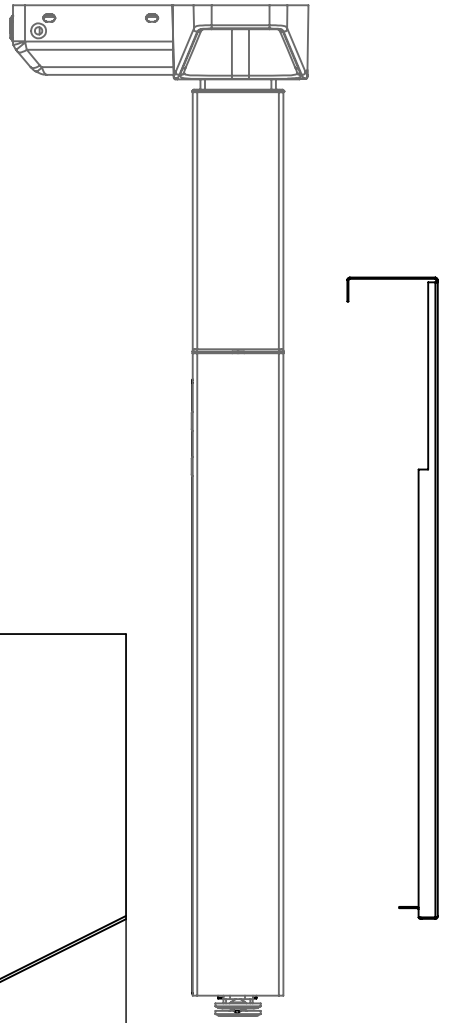

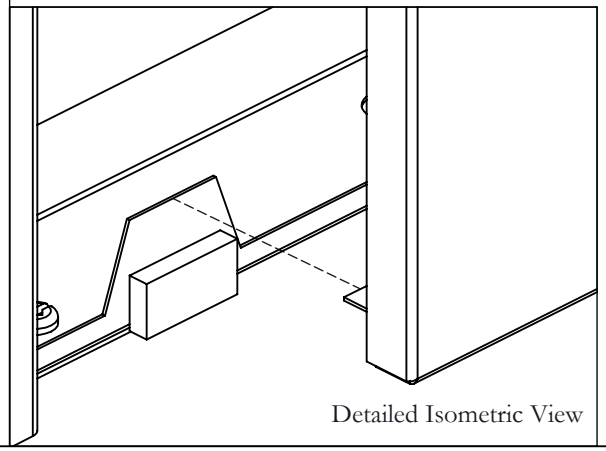

Detailed Isometric View

STEP 5: Mount Outside Cover Assembly to the highlighted part of the Inside Cover Assembly as shown.

MOUNT SIDE COVER ASSEMBLY

NOTE: Installation of HNBCGMSS shown

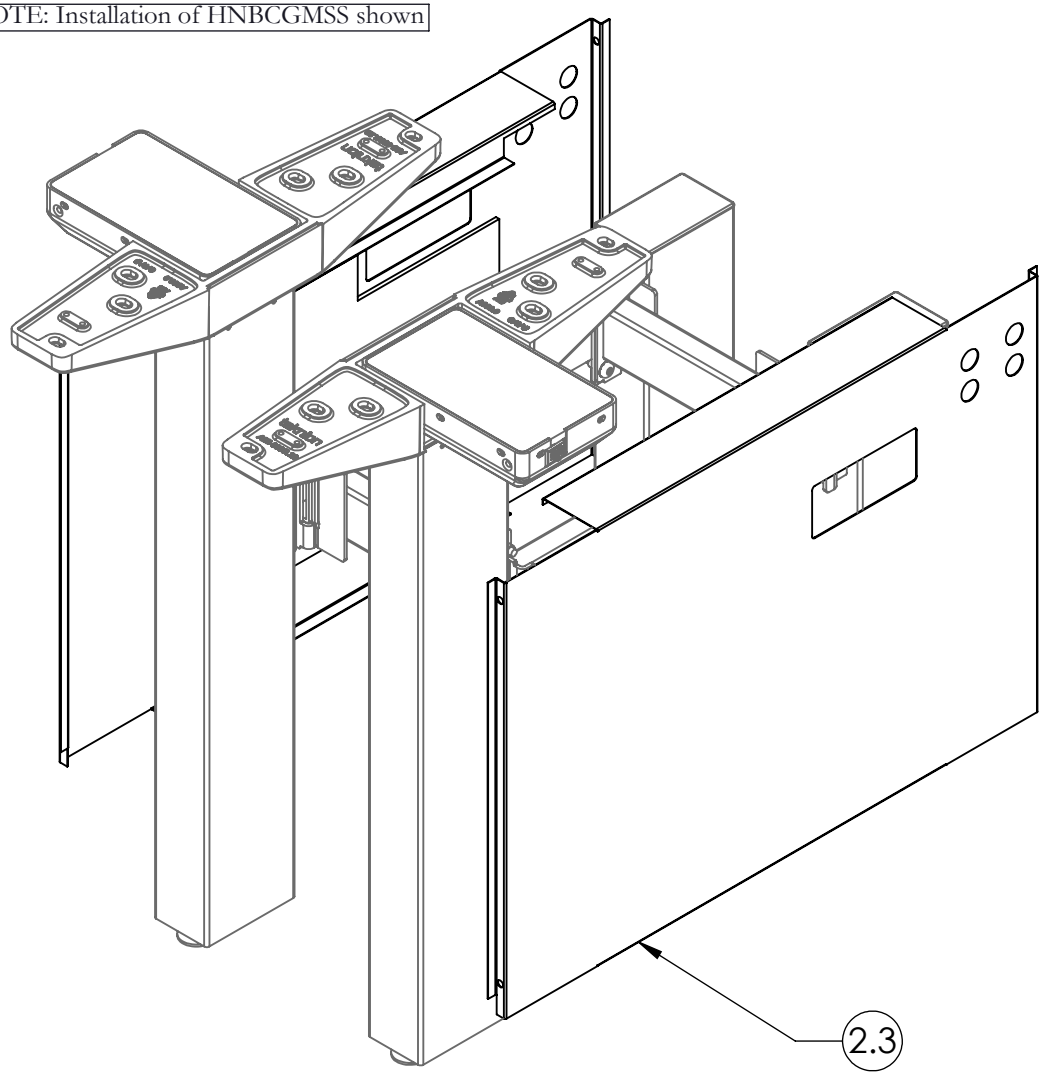

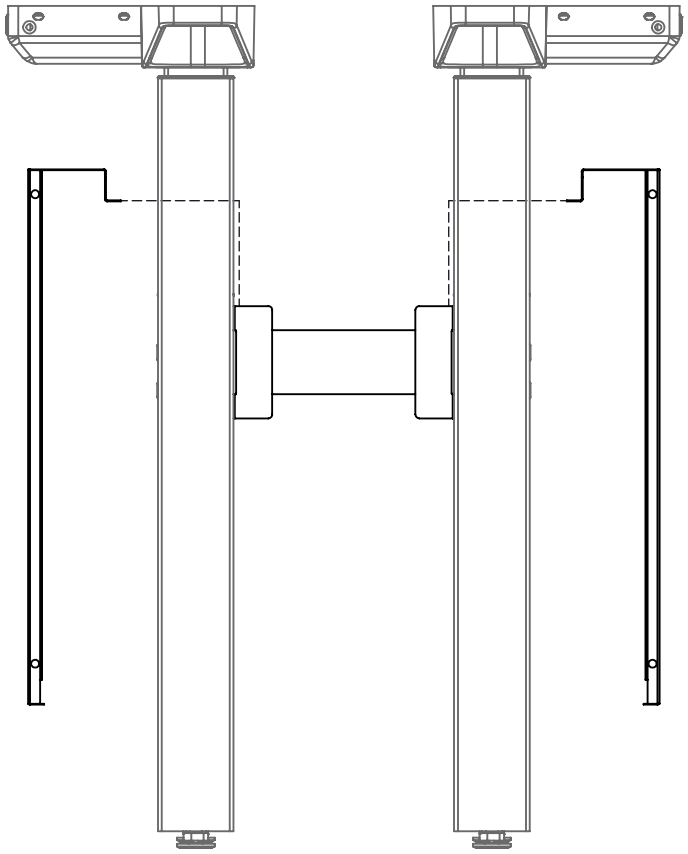

Side View

STEP 7: Mount Side Cover Assembly as shown above.

FRONT COVER ASSEMBLY

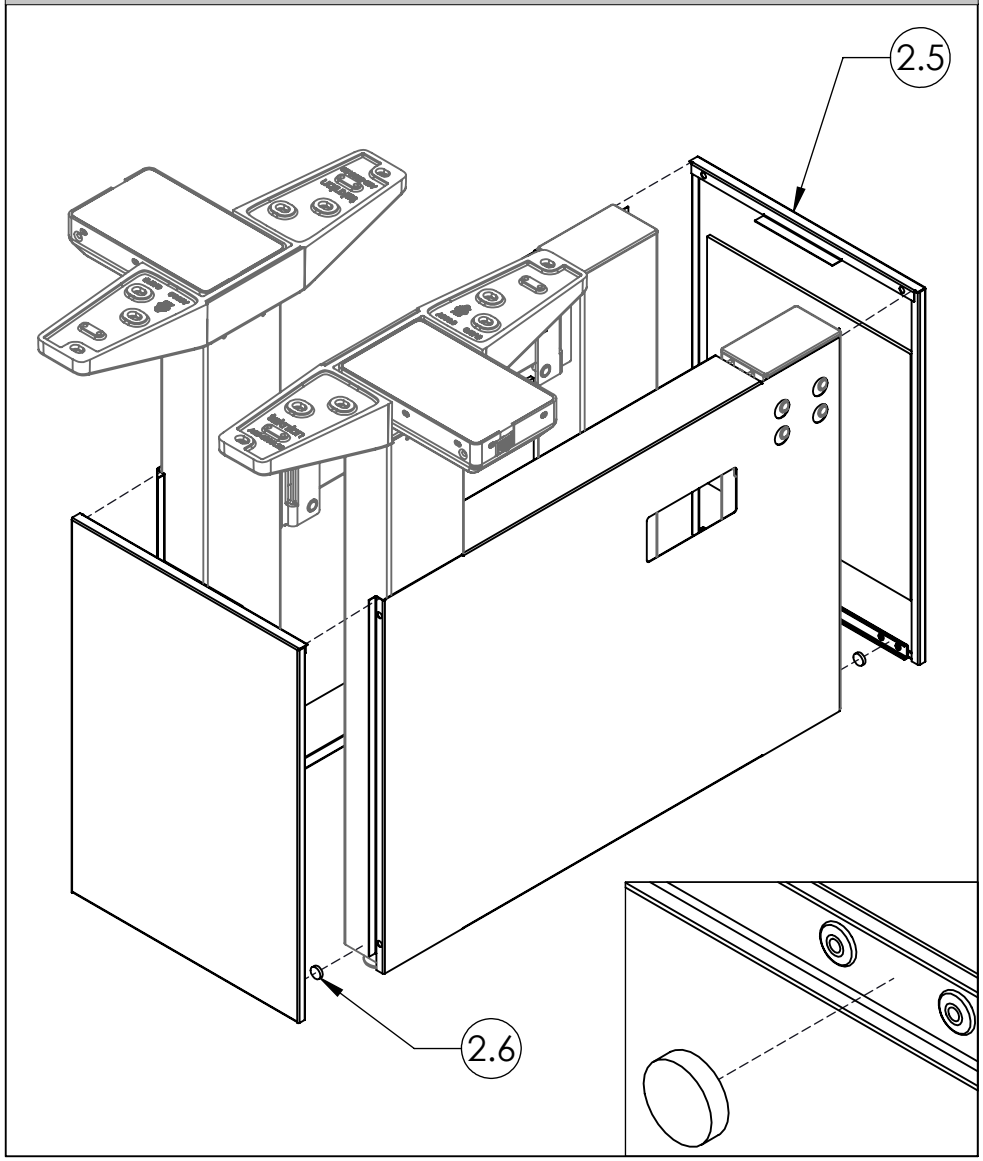

STEP 8: Place the magnet then, mount Front Cover Assembly as shown above.

PLACE TOP COVERS

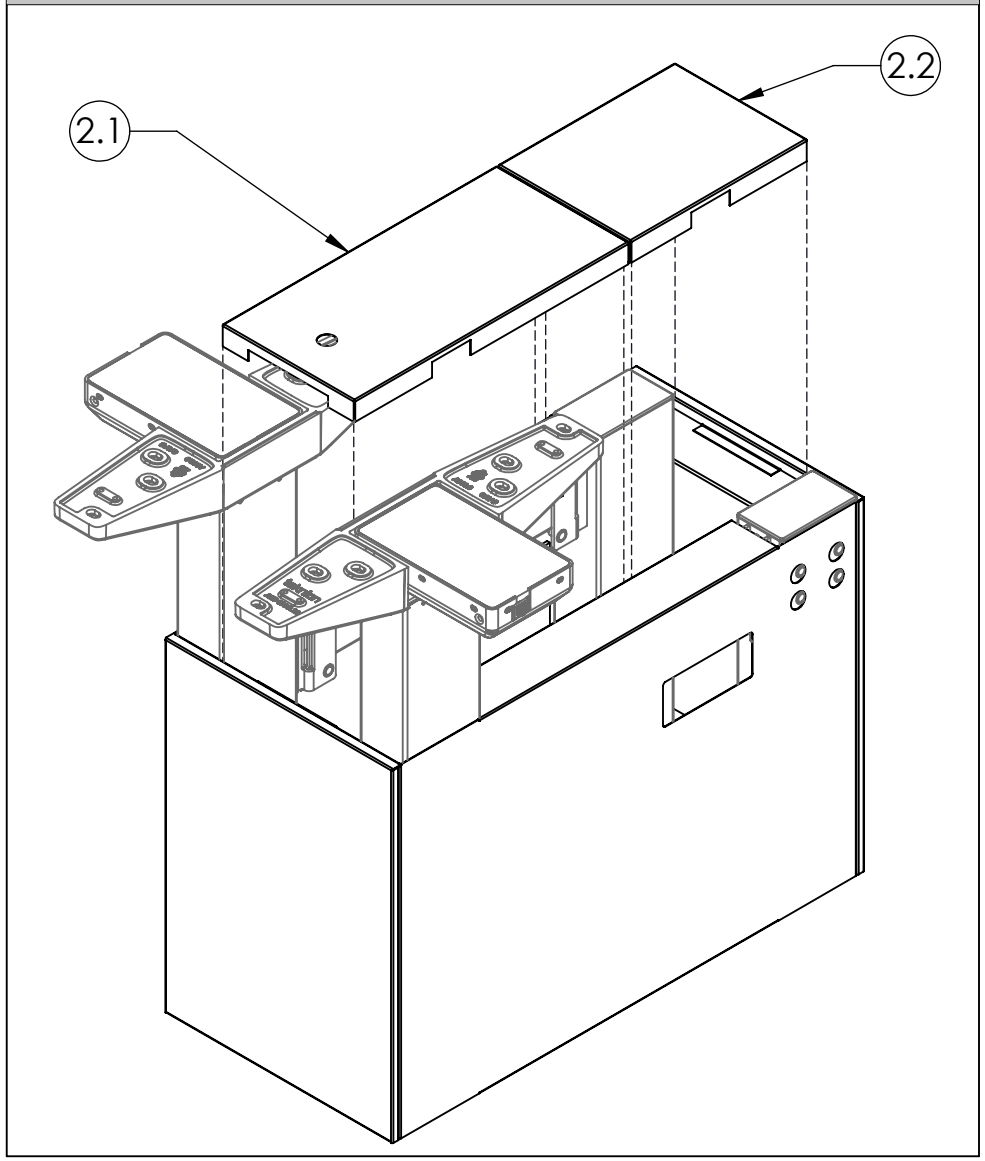

STEP 9: Place Back Top Cover and Top Cover as shown above.

Navigate Single-Sided End Gable - Solid (HNBCGESS), Navigate Single-Sided Mid Gable - Solid (HNBCGMSS)

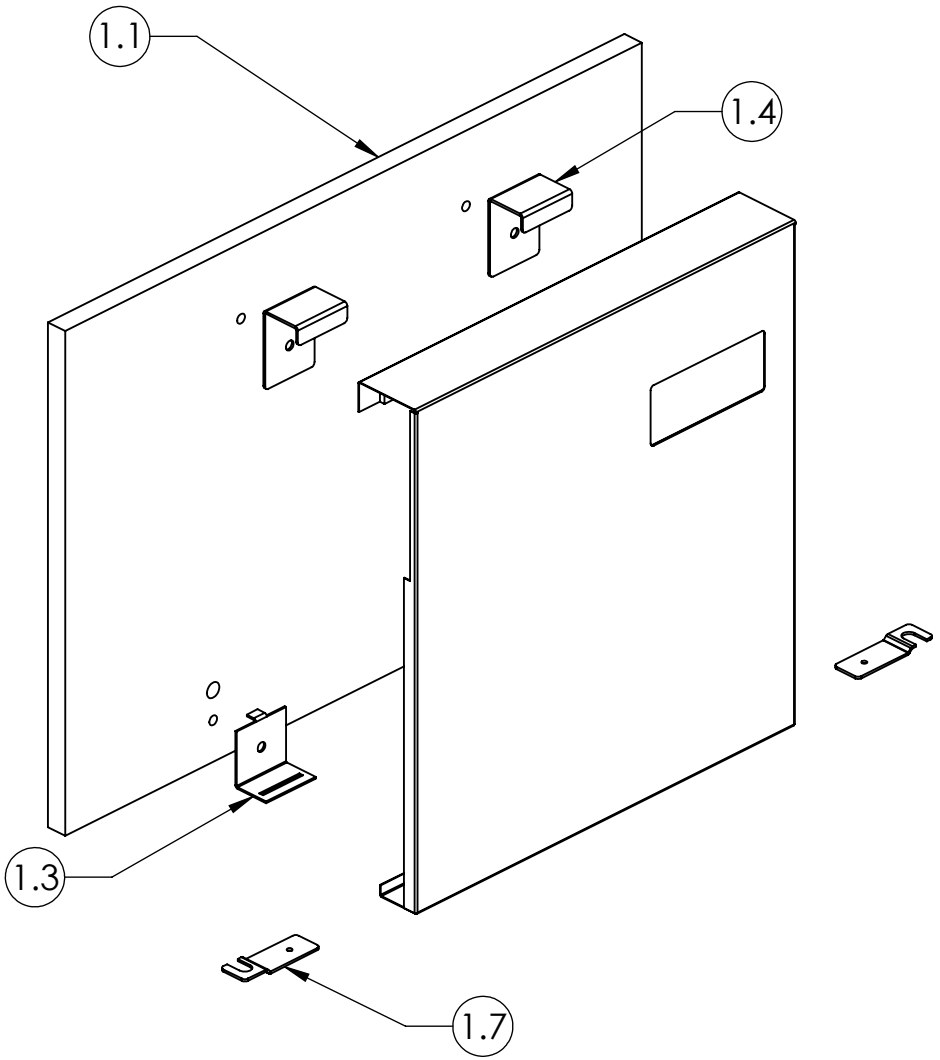

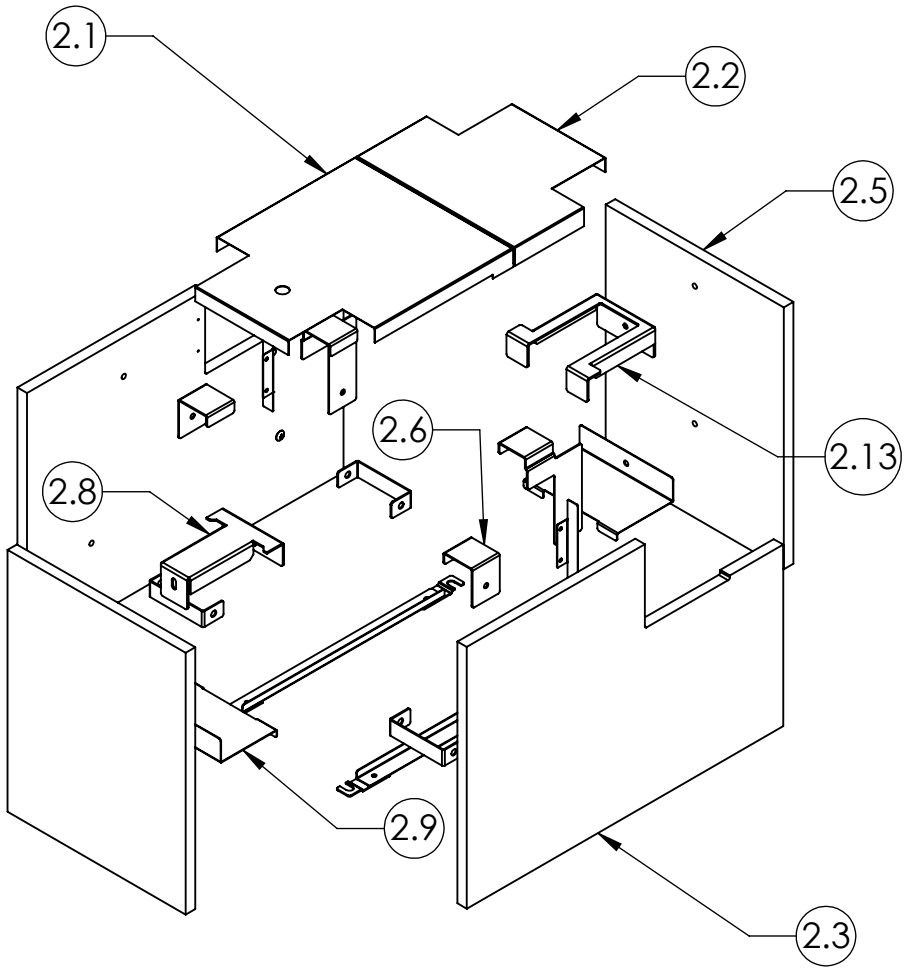

Part & Product Identification

ITEM NO.	PREVIEW	DESCRIPTION	PART NUMBER	QTY.
1. NAVITAGE END GABLE, SOLID, SINGLE SIDED, HAB (HNBCGESS30)				
1.1	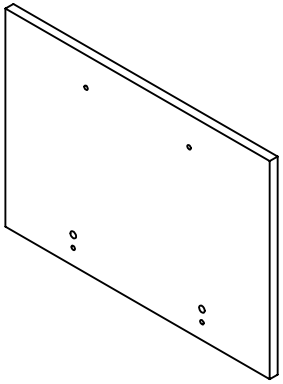	COVER FOR END GABLE, SINGLE SIDED, HAB	C07-4700\30	1
1.2	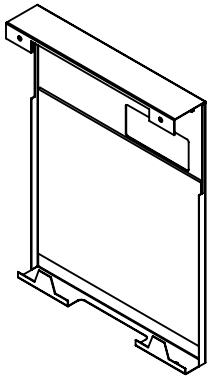	INSIDE COVER ASSY FOR WOOD END GABLE, SINGLE SIDED, HAB	N09-8869R\30	1
1.3	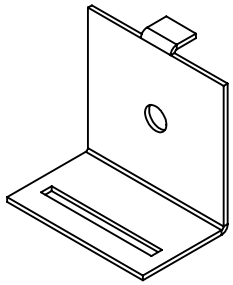	BOTTOM BRACKET FOR WOOD END GABLE, HAB	A16-3020	2

ITEM NO.	PREVIEW	DESCRIPTION	PART NUMBER	QTY.
1.4	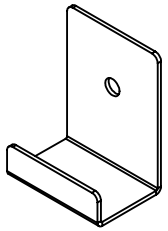	HANGING BRACKET FOR WOOD END GABLE, HAB	A16-3021	2
1.5	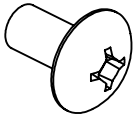	1/4-20 UNCx0.500" 2A,CROSS/SQ.COM B.SOCK.,TRS.HEAD, MACH.SCR.,STEEL, ZN	E01-0110	4
1.6	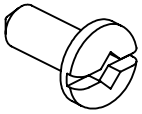	#10X1/2" TAP SCR, QUAD,PAN	E01-0023	2
1.7	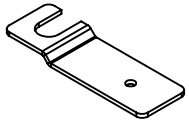	GABEL CONNECTING PLATE	A16-3651	2
2. NAVIGATE MID GABLE, SOLID, SINGLE SIDED, HAB (HNBCGMSS)				
2.1	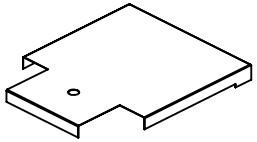	TOP COVER FOR WOOD MID GABLE W/POWER POLE, DOUBLE SIDED, HAB	A16-7456\60	1
2.2	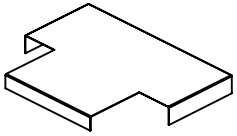	BACK TOP COVER FOR WOOD MID GABLE, SINGLE SIDED, HAB	A16-7571A	1
2.3	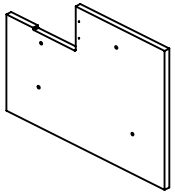	SIDE COVER FOR MID GABLE, SINGLE SIDED, HAB	C07-4718AR\30	1

Part & Product Identification

ITEM NO.	PREVIEW	DESCRIPTION	PART NUMBER	QTY.
2.4	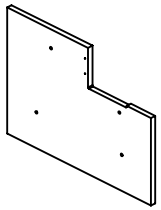	SIDE COVER FOR MID GABLE, SINGLE SIDED, HAB	C07-4718AL\30	1
2.5	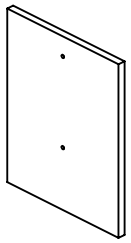	FRONT COVER FOR MID GABLE, HAB	C05-8864	2
2.6	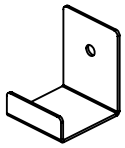	HANGING BRACKET, FOR WOOD MID GABLE, HAB	A16-3203	2
2.7	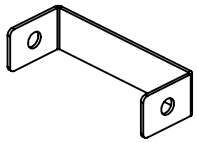	BOTTOM CONNECTING BRKT FOR WOOD MID GABLE, HAB	A16-3026	4
2.8	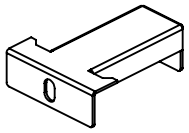	FRONT HANGING BRKT FOR WOOD MID GABLE, HAB	A16-3028	1
2.9	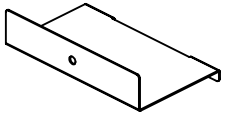	BOTTOM BRKT FOR WOOD MID GABLE, HAB	A16-3027	2
2.10	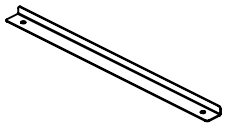	MID GABEL BOTTOM ANGLE BAR, SINGLE SIDED, HAB	A16-7572\30	2

ITEM NO.	PREVIEW	DESCRIPTION	PART NUMBER	QTY.
2.11	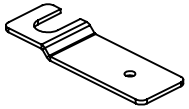	GABLE CONNECTING PLATE	A16-3651	4
2.12	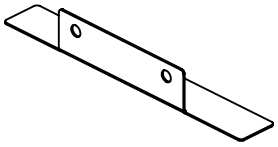	COVER PLATE FOR CABLE CUTOUT, HAB	A16-3689	2
2.13	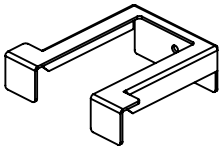	BACK HANGING BRKT FOR WOOD MID GABLE, SINGLE SIEDED, HAB	A16-7573	1
2.14	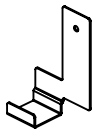	HANGING BRACKET, FOR WOOD MID GABLE, SINGLE SIDED, HAB	A16-7569R	1
2.15		HANGING BRACKET, FOR WOOD MID GABLE, SINGLE SIDED, HAB	A16-7569L	1
2.16	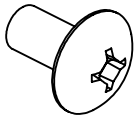	1/4-20 UNCx0.500" 2A,CROSS/SQ.COMB.SOCK.,TRS.HEAD,MACH.SCR.,STEEL,ZN	E01-0110	12
2.17	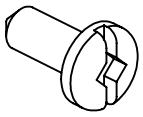	#10X1/2" TAP SCR, QUAD,PAN	E01-0023	4
2.18	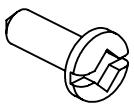	SCREW, WOOD,#6 X 7/16", DEEP THREAD, QUAD, TRUSS	E04-0050	4

ATTACH CONNECTION PLATES TO FRAME LEGS

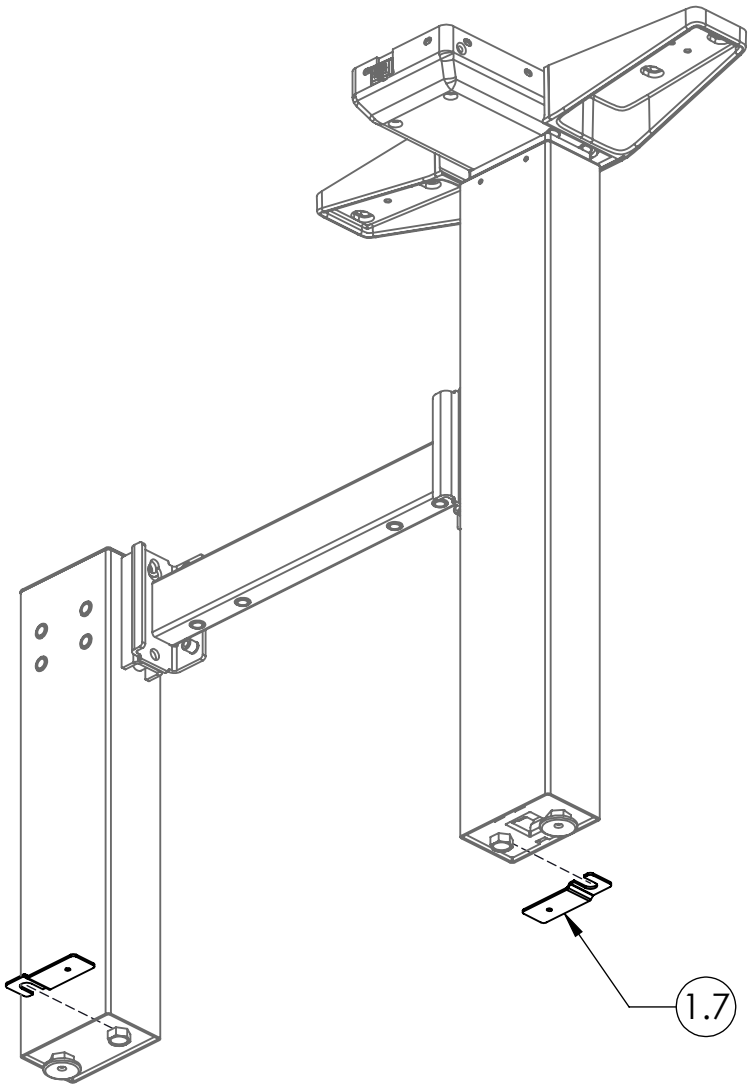

STEP 1: Loosen Legs Hex Bolt to allow enough room for Gable Connecting Plate. Fasten Gable Connecting Plates to Frame Legs.

ATTACH SUPPORT BRACKETS

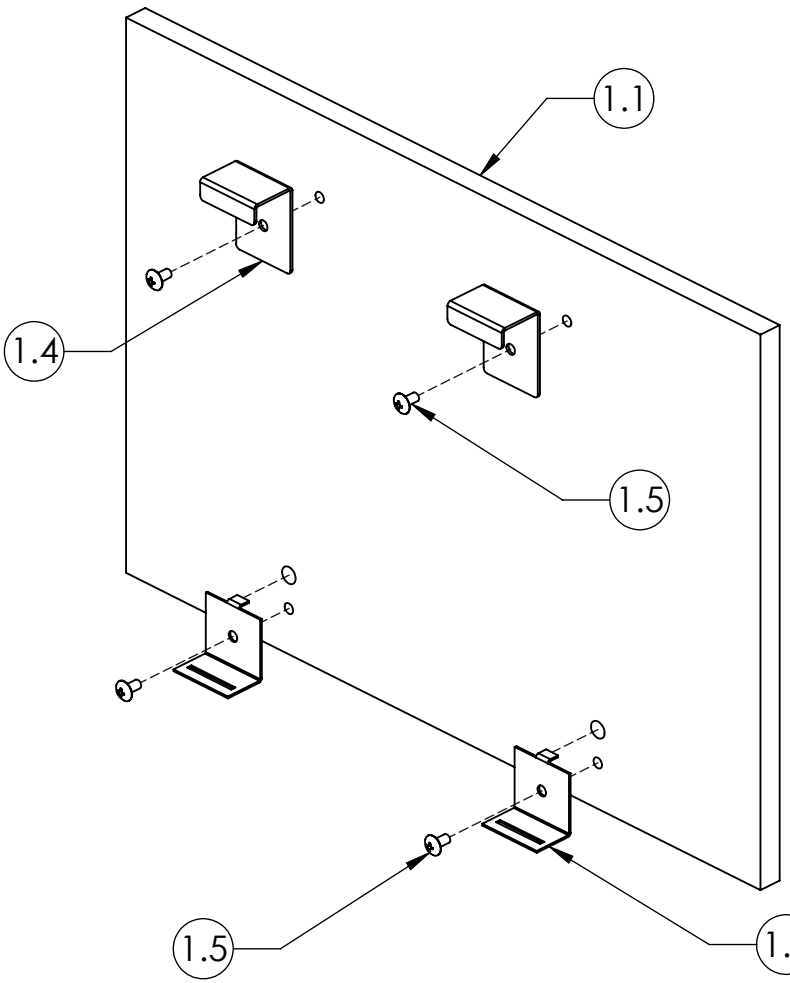

STEP 2: Fasten Brackets to Outside Cover Assembly

MOUNT INSIDE COVER ASSEMBLY

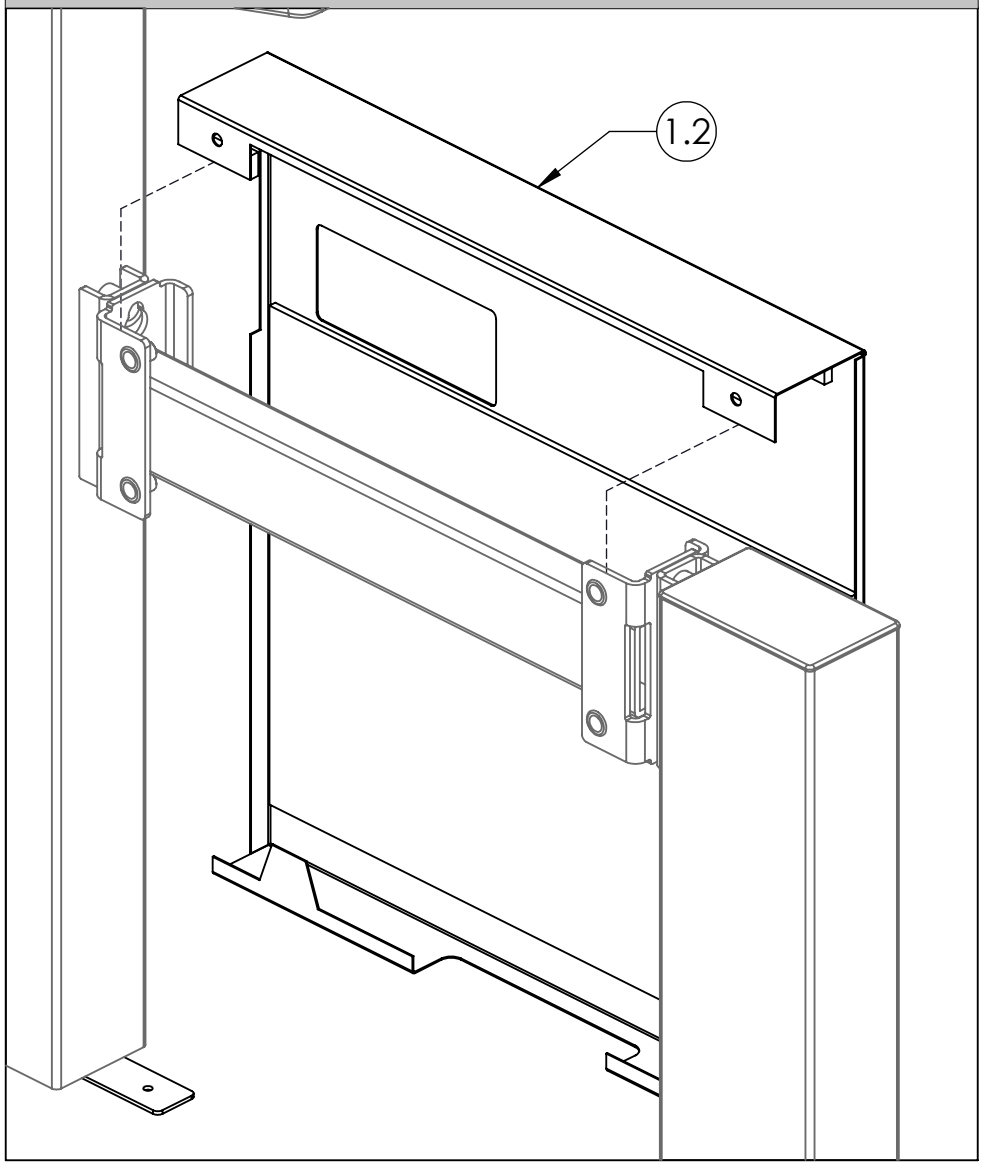

STEP 3: Mount Inside Cover Assembly onto Stretcher Bar.

MOUNT INSIDE COVER ASSEMBLY

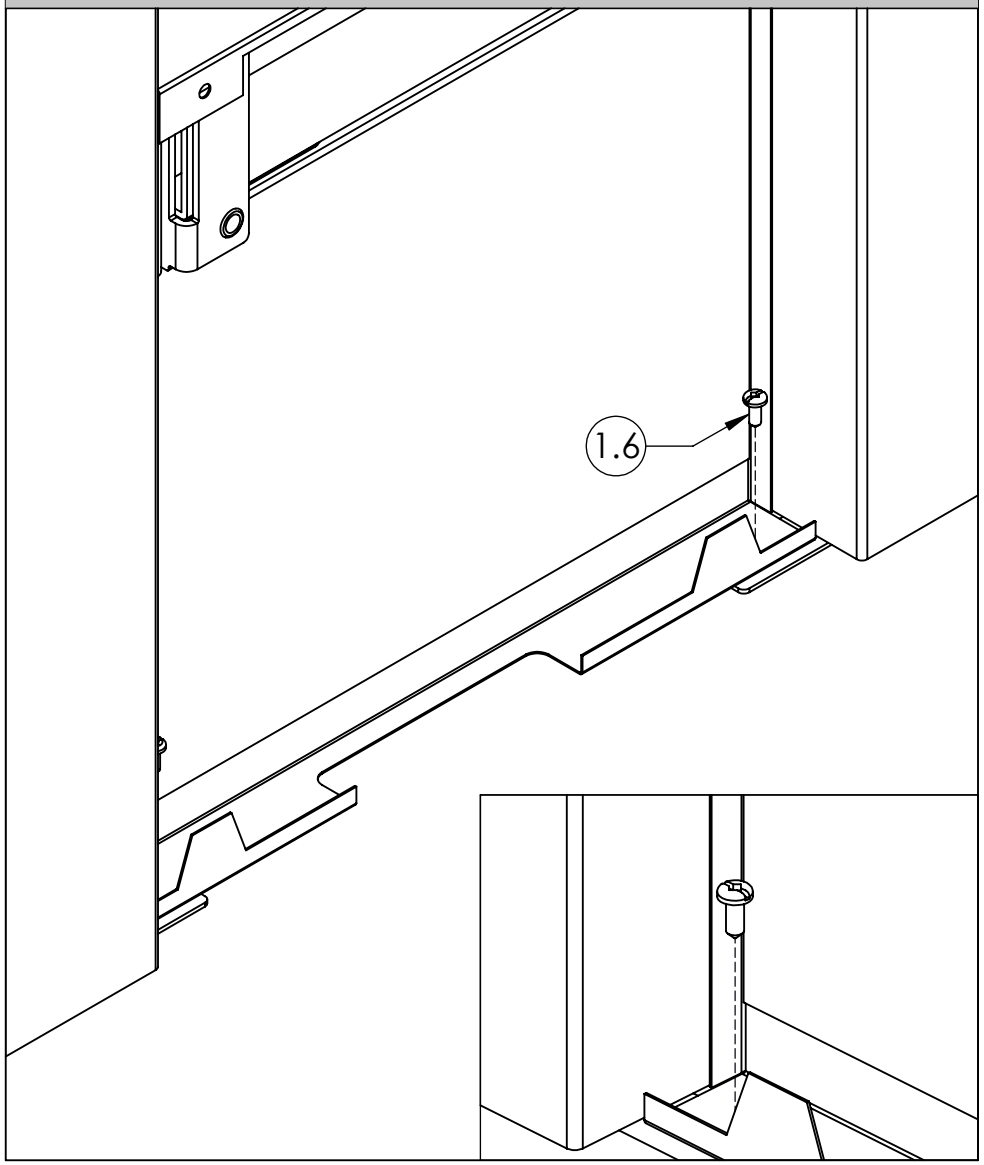

STEP 4: Secure Inside Cover Assembly to Gable Connecting Plate on both sides using Tap Quad Pan screws provided.

MOUNT OUTSIDE COVER ASSEMBLY

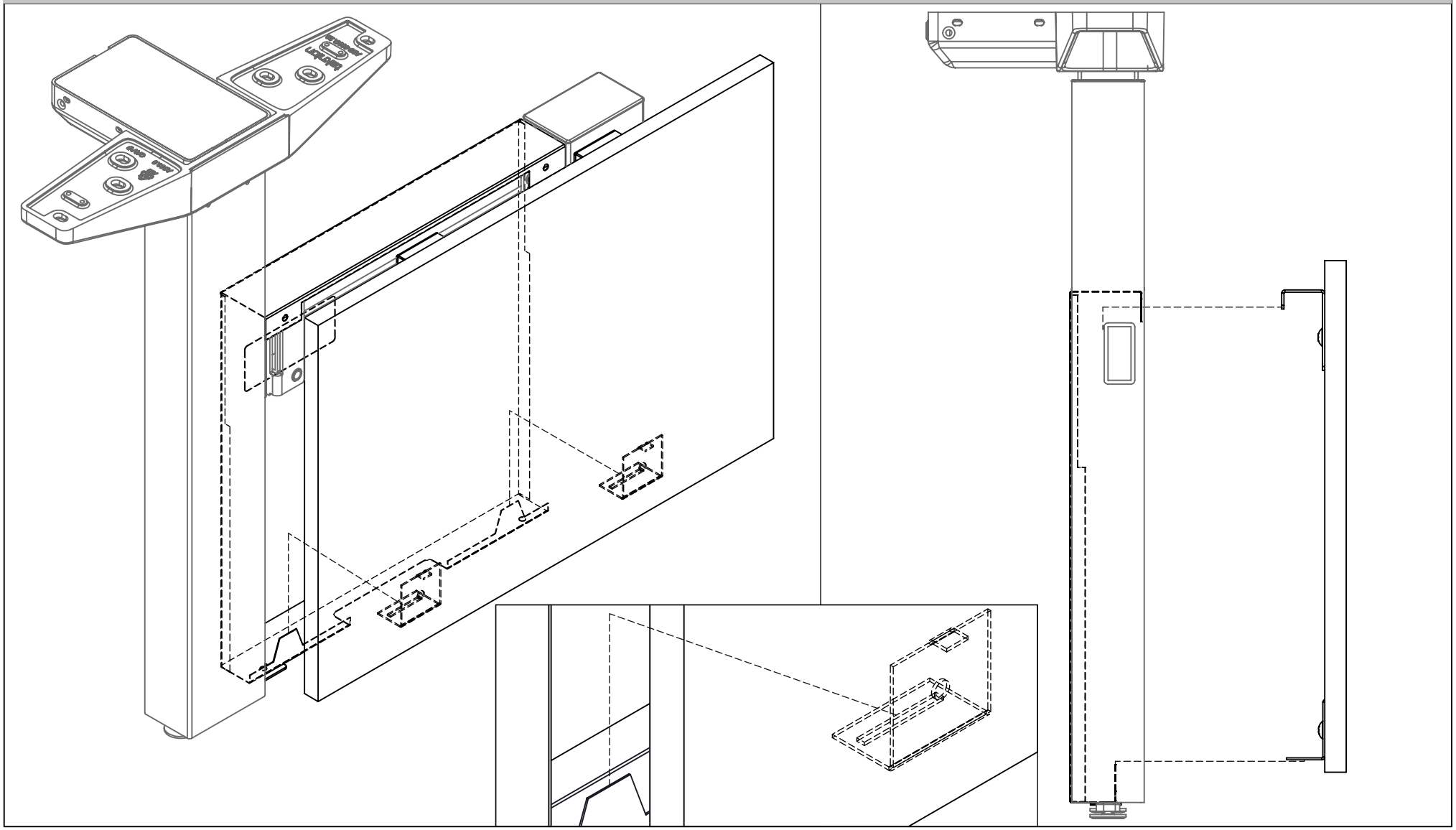

STEP 5: Mount Outside Cover Assembly to Stretcher Bar as shown above.

ATTACH CONNECTING PLATES TO FRAME LEGS

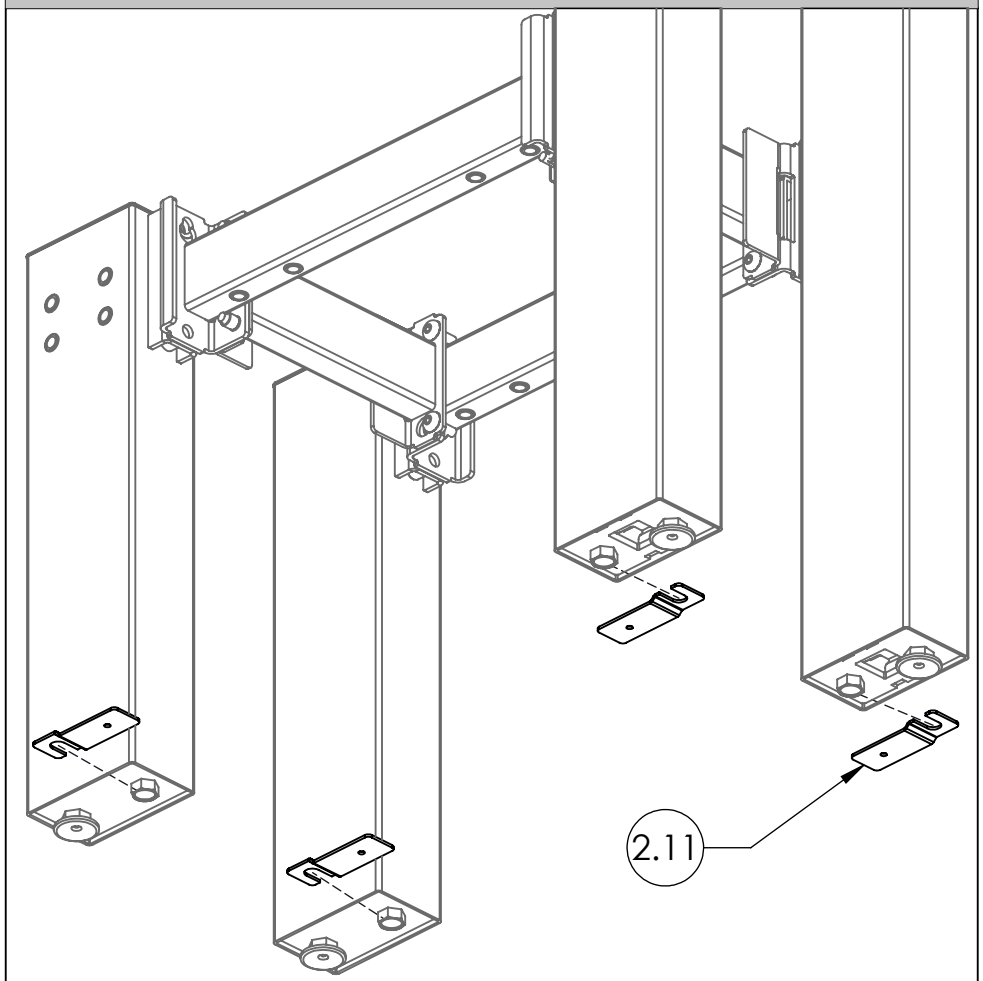

STEP 6: Loosen Legs Hex Bolt to allow enough room for Gable Connecting Plate. Fasten Gable Connecting Plates to Frame Legs

MOUNT BOTTOM ANGLE BAR

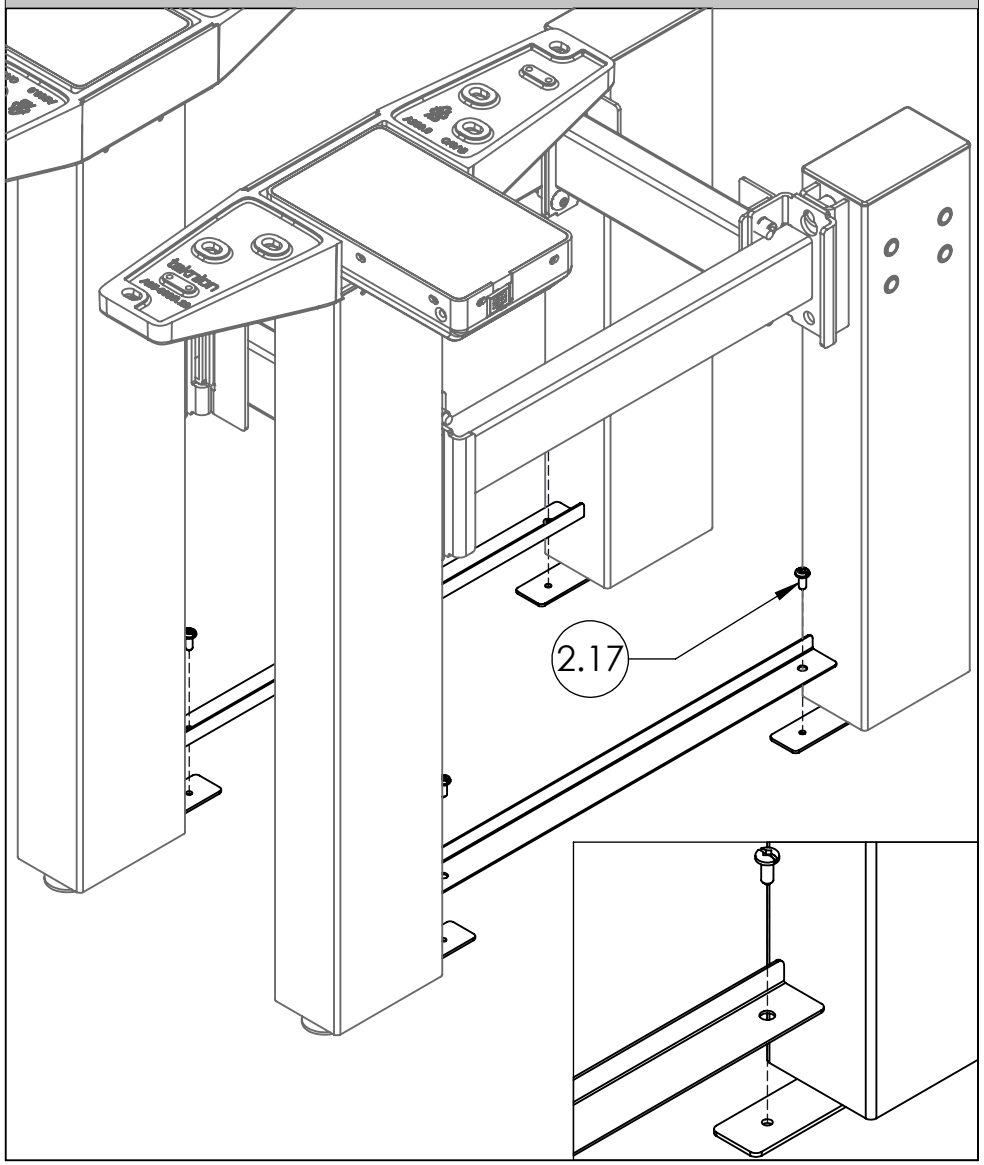

STEP 7: Mount Bottom Angle Bar and secure to Gable Connecting Plate on both sides using Tap Quad Pan screws provided

ATTACH SUPPORT BRACKETS - 1

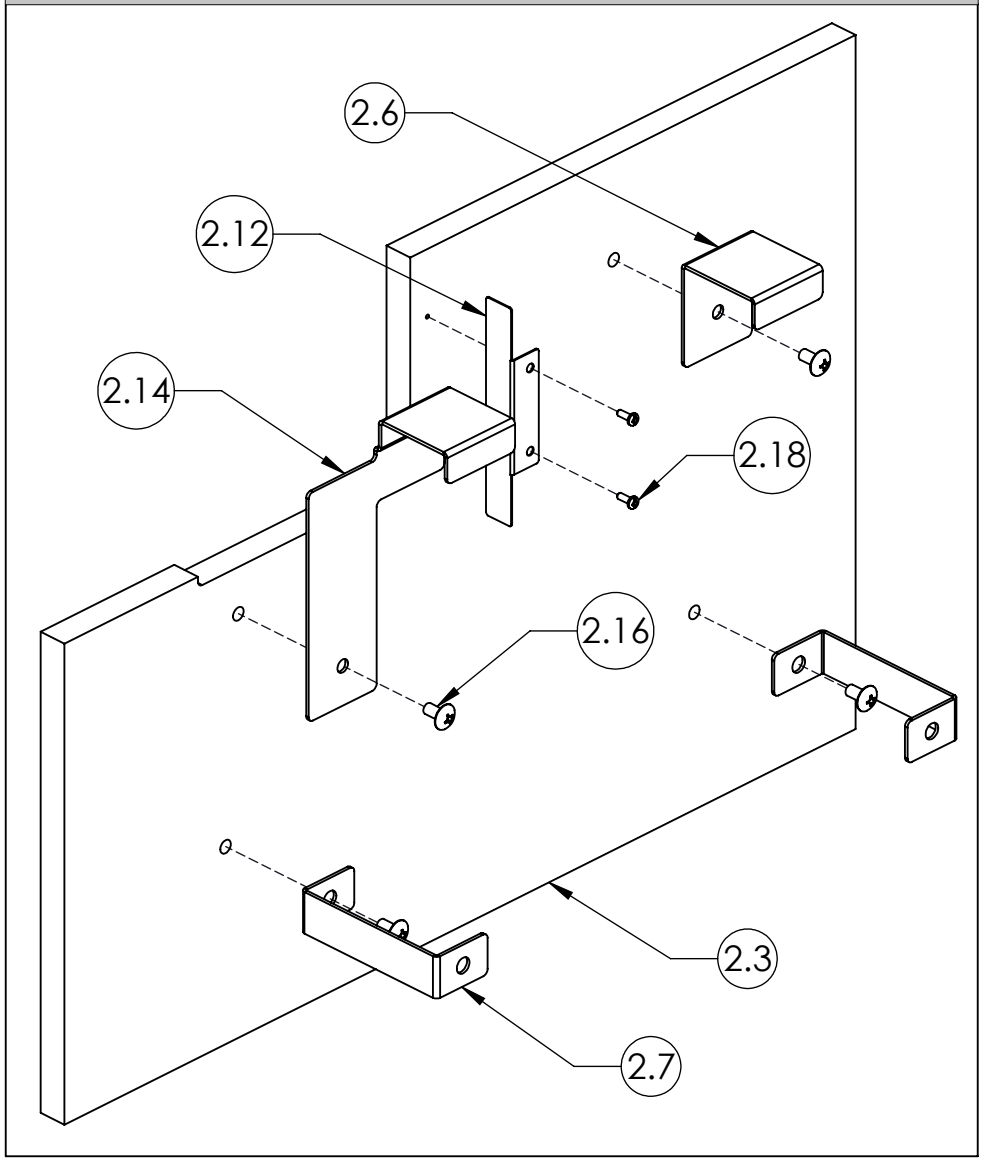

STEP 8: Fasten Brackets and Cover Plates to Side Cover Assemblies as shown.

ATTACH SUPPORT BRACKETS - 2

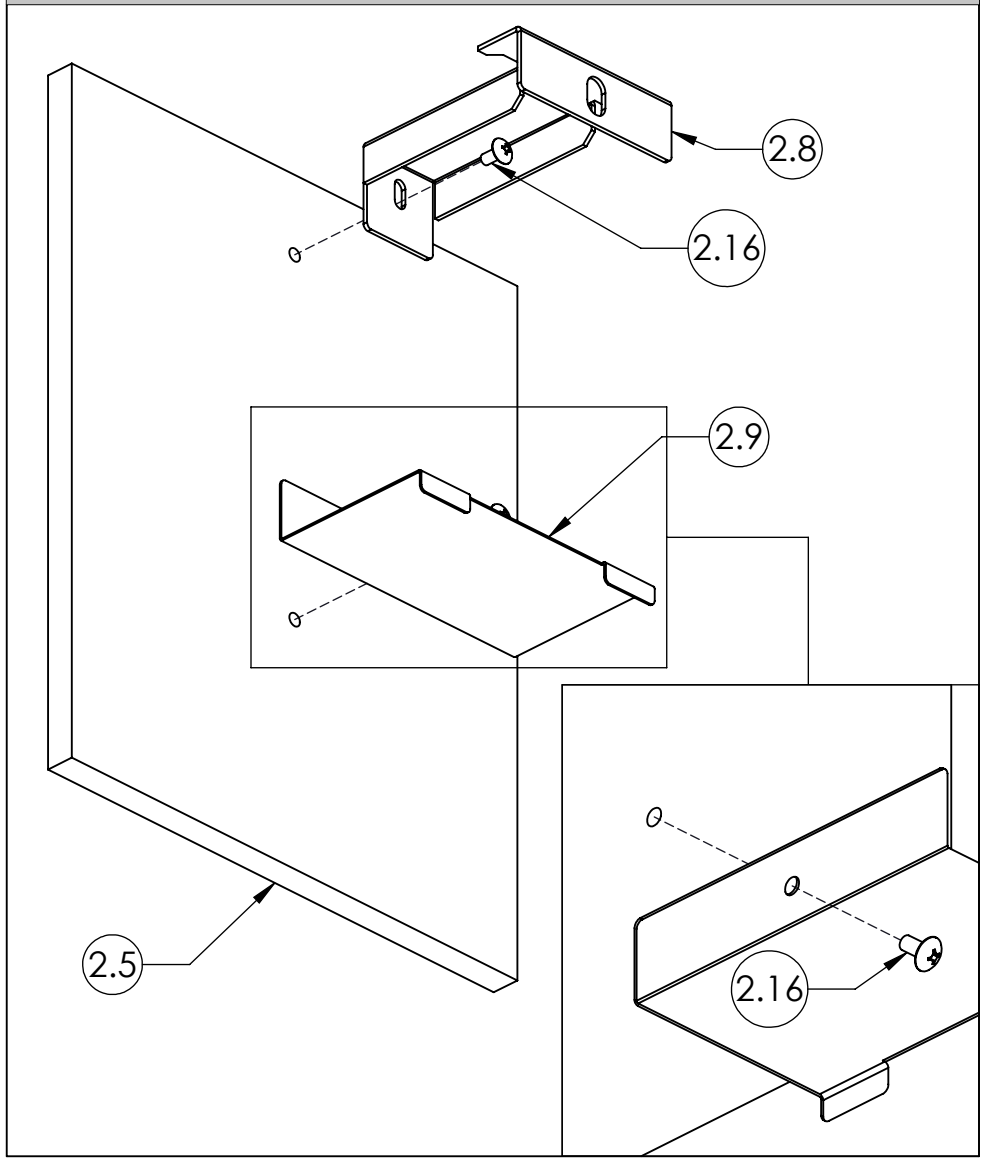

STEP 9: Fasten Brackets and Cover Plates to Front Covers as shown.

MOUNT SIDE COVER ASSEMBLY

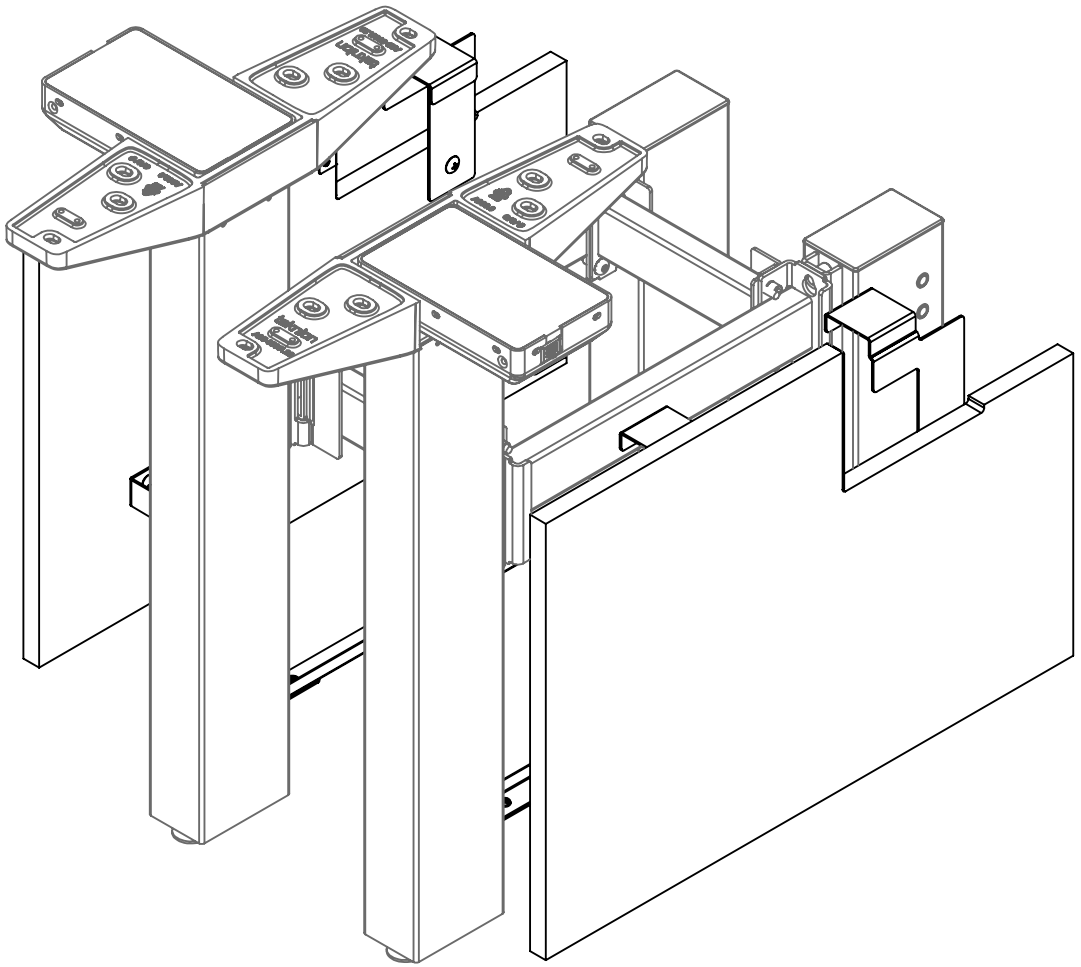

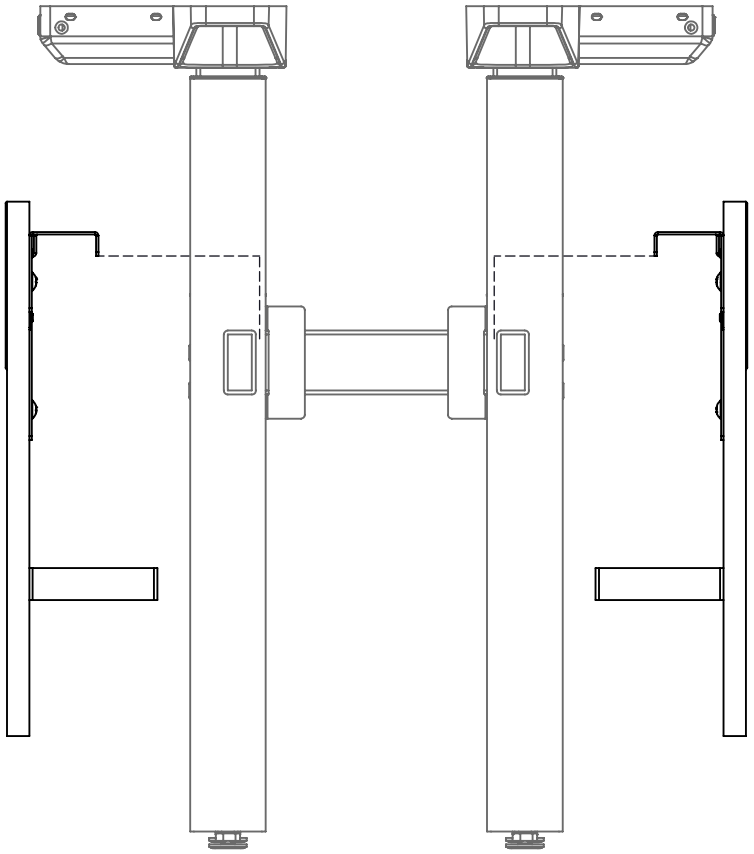

STEP 10: Mount Side Cover Assembly onto the Stretcher Bar as shown.

MOUNT FRONT COVER ASSEMBLY

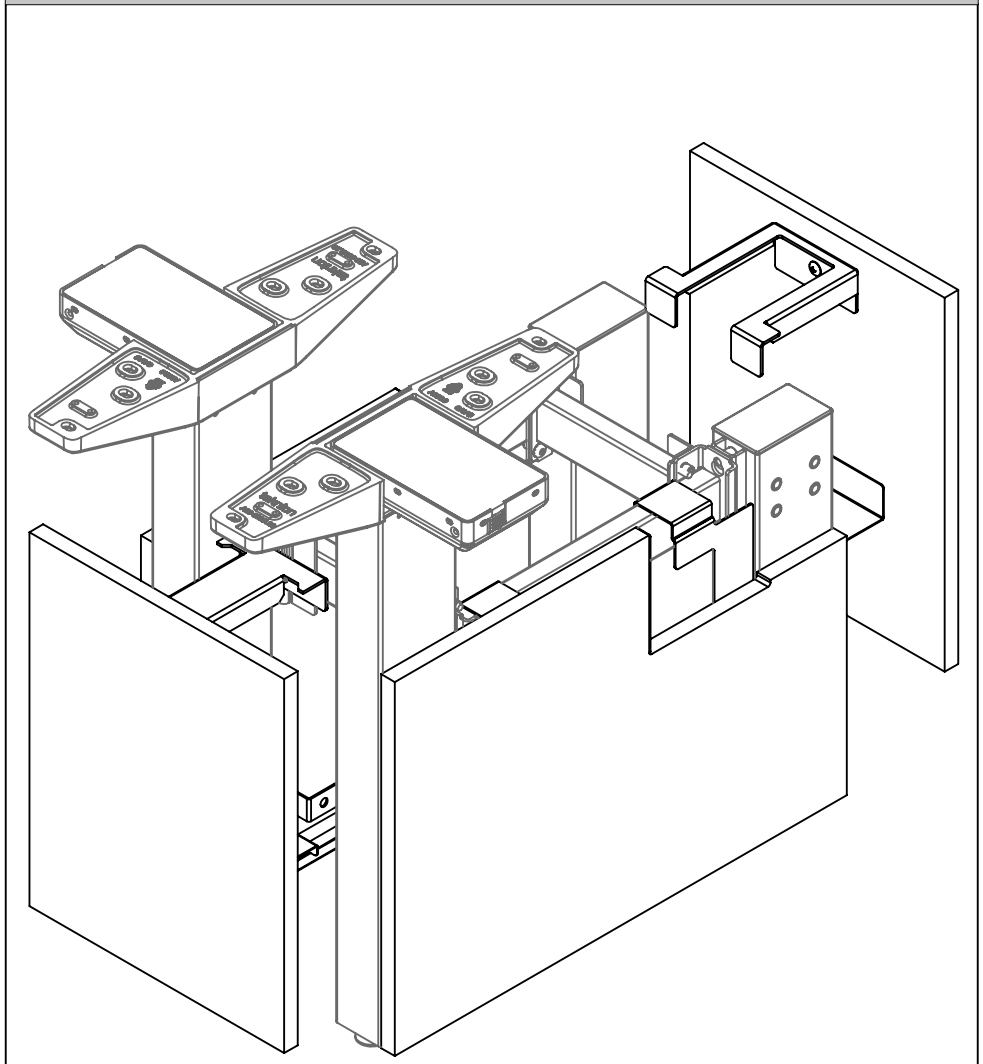

STEP 11: Mount Front Covers onto the Frame Link and Bottom Connecting Brackets.

PLACE TOP COVERS

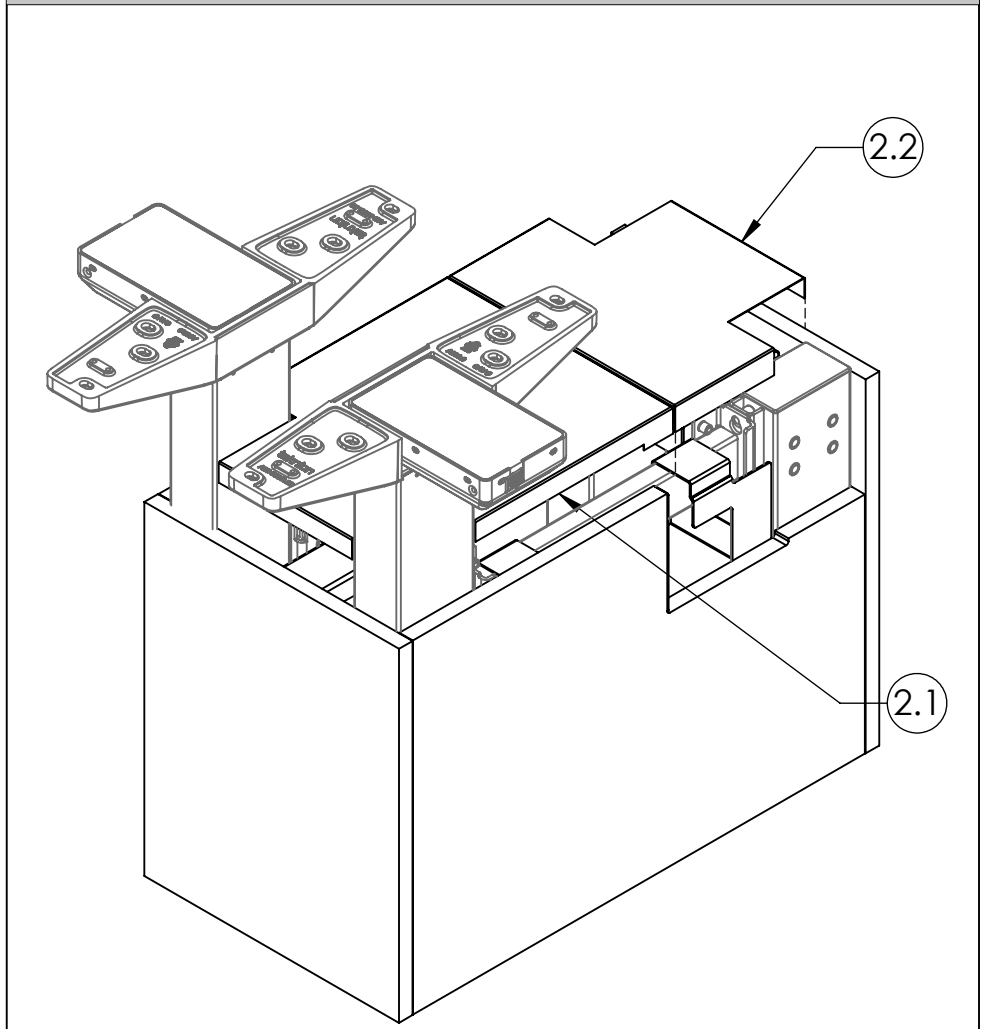

STEP 12: Place Top Covers as shown above.

Navigate Single-Sided Transition Mid-Gable - Metal (HNBCGMMR)

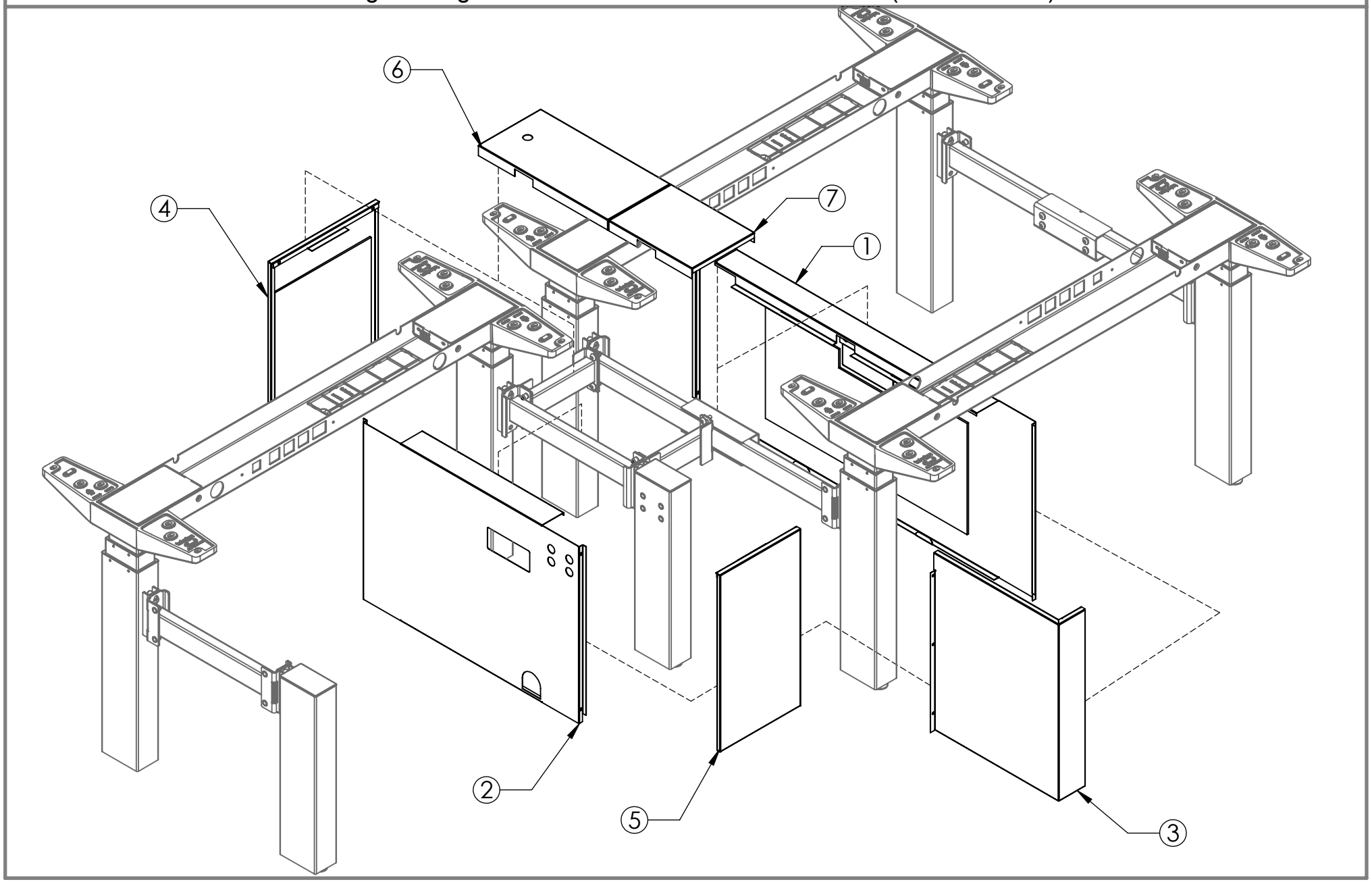

Part & Product Identification

ITEM NO.	PREVIEW	DESCRIPTION	PART NUMBER	QTY.
1	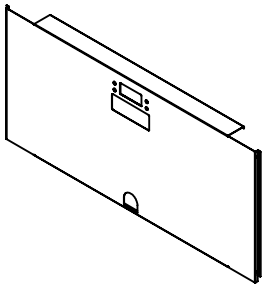	SIDE COVER ASSY FOR METAL MID GABLE, DOUBLE SIDED, HAB	N09-8788X-X	1
2	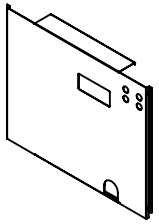	SIDE COVER ASSY FOR METAL MID GABLE, SINGLE SIDED, HAB	N09-8876R-X	1
3	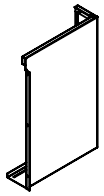	BACK COVER ASSY FOR METAL TRANSITION GABLE, HAB	N09-9083L-X	1
4	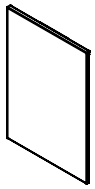	FRONT COVER ASSY FOR METAL MID GABLE, HAB	N09-5182	1
5	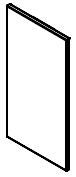	BACK COVER ASSY FOR METAL MID GABLE, HAB	N09-9086	1

ITEM NO.	PREVIEW	DESCRIPTION	PART NUMBER	QTY.
6	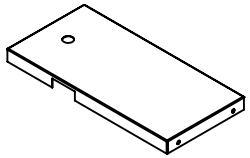	TOP COVER FOR METAL MID GABLE W/POWER POLE, DOUBLE SIDED, HAB	A16-7491-X	1
7	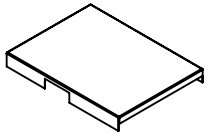	BACK TOP COVER FOR METAL MID GABLE, SINGLE SIDED, HAB	A16-7566X	1
8	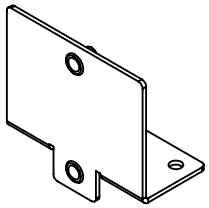	BRACKET ASSY. FOR TRANSITION GABLE, HAB	N09-9089	1
9	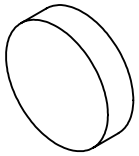	1/2" DIAMETER x 1/8" THICK CIRCULAR RARE EARTH MAGNET	D03-0059	3
10	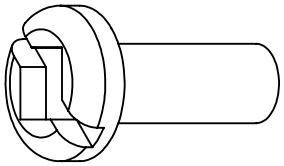	SCREW,TAPPING,#6 X 3/8",QUADREX,PAN,TYPE F	E01-0081	3
11	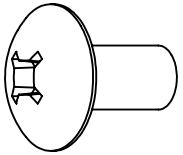	1/4-20 UNCx0.500" 2A,CROSS/SQ.COMB.SOCK.,TRS.HEAD,MACH.SCR., STEEL,ZN	E01-0110	2

INSTALL BRACKET

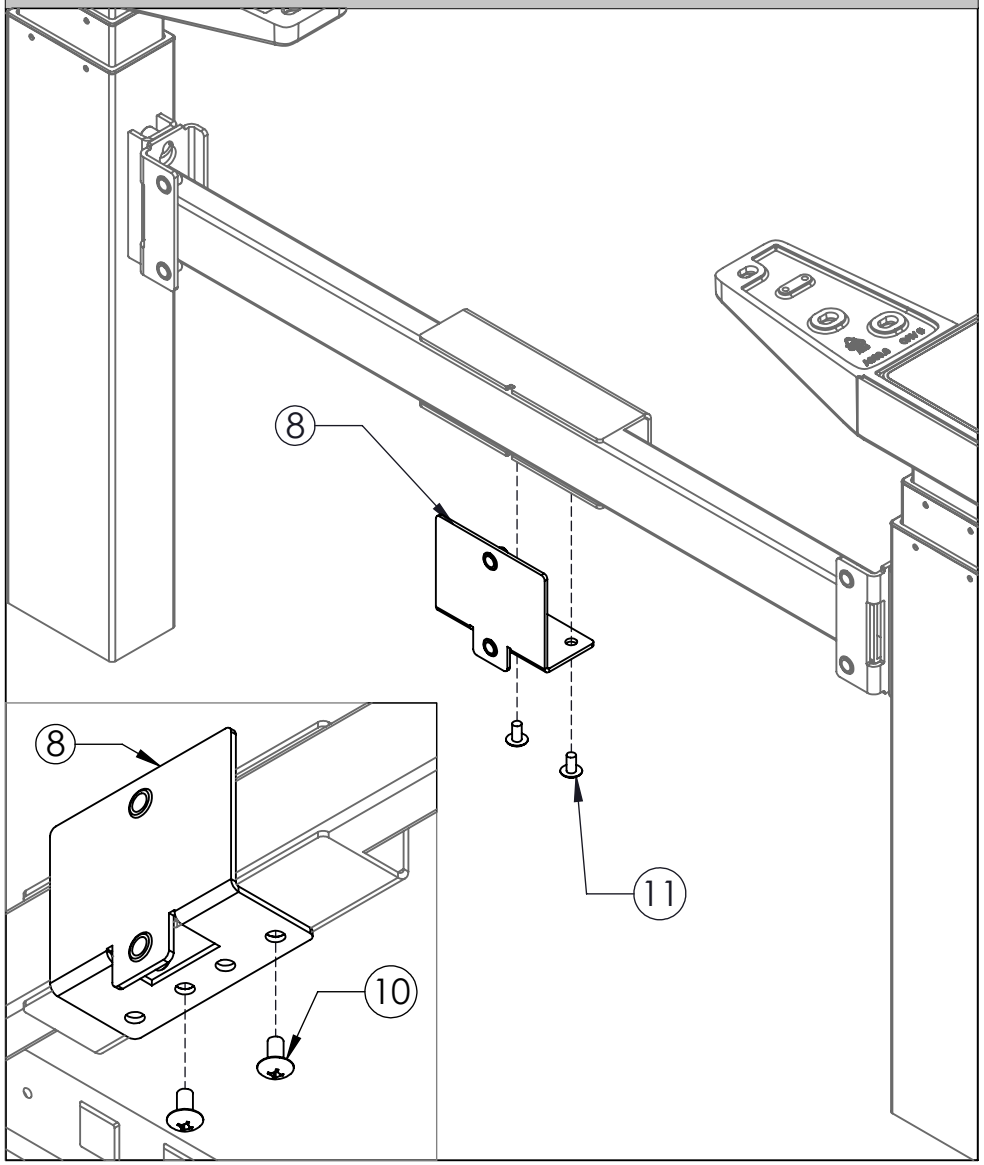

STEP 1: Attach Bracket to stretcher bar using Screws provided.

INSTALL FRAME LINK

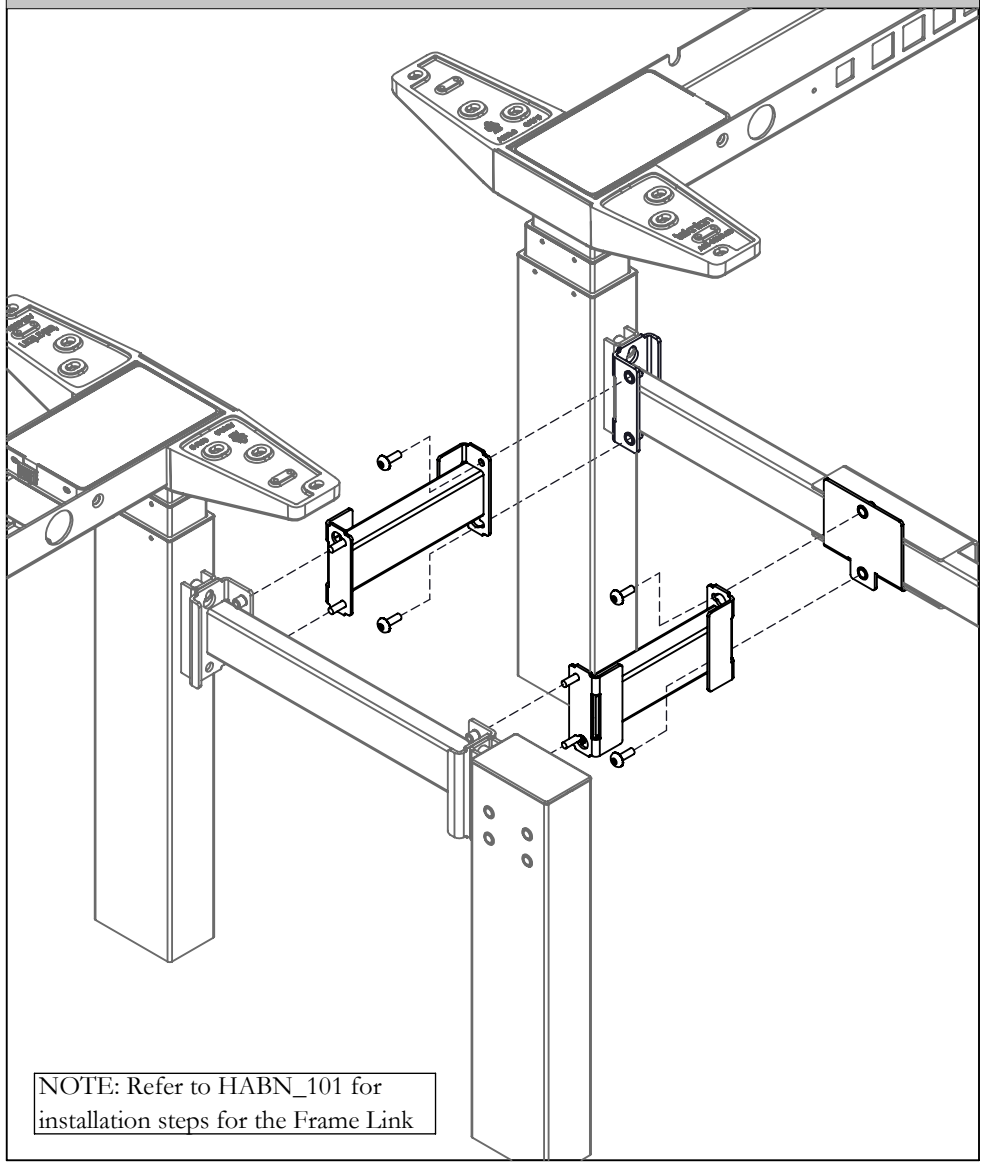

STEP 2: Install Frame Link to join both frames.

NOTE: Refer to HABN_101 for installation steps. Frame Link must be ordered seperately.

ASSEMBLE BACK COVER

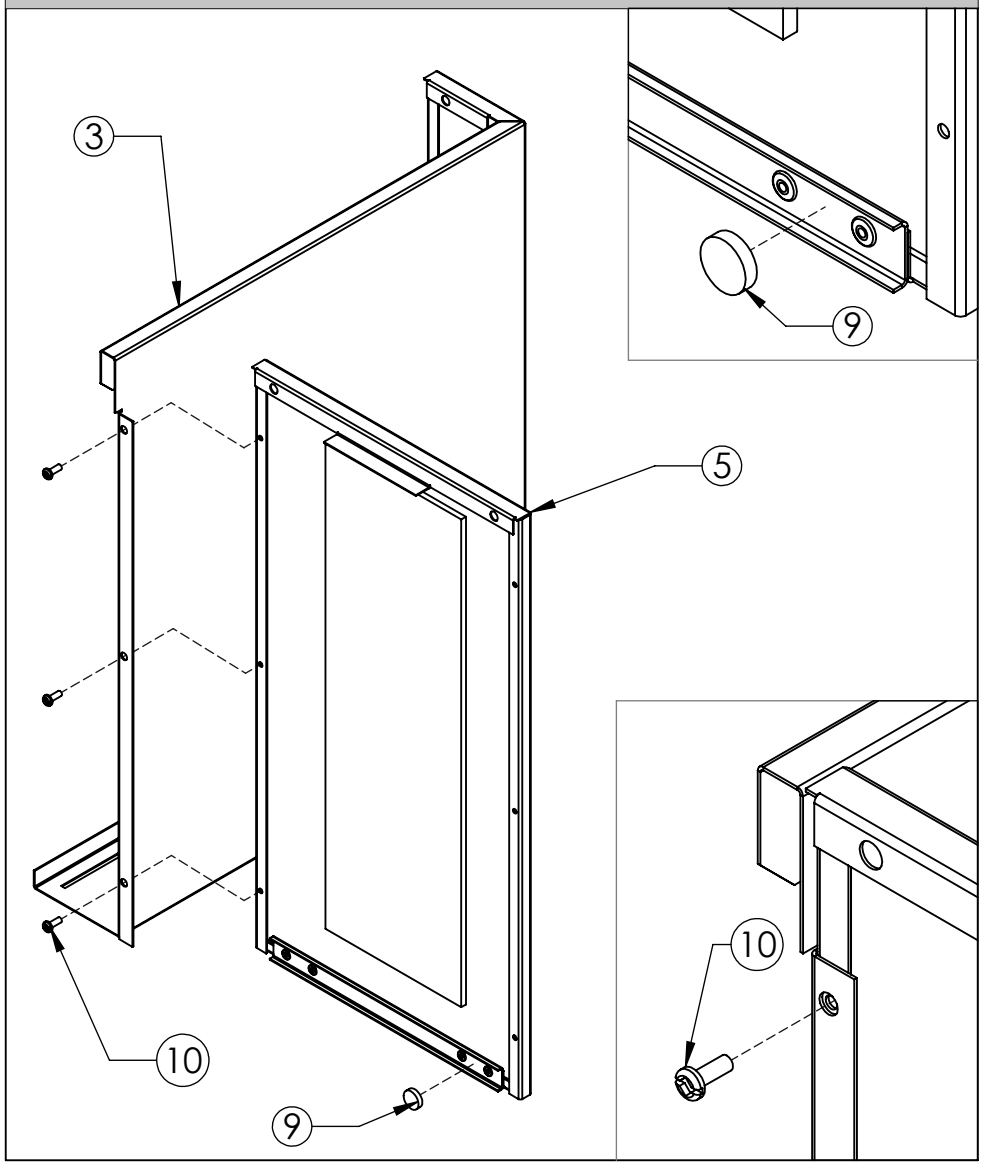

STEP 3: Attach both Back Cover sub-assemblies together using Screws provided. Stick Magnet in between the two rivets near the bottom of the Back Cover

ATTACH SIDE COVER TO FRAME

NOTE: Bracket and Screws included with Wire Channel, refer to HABN_223a for more steps.

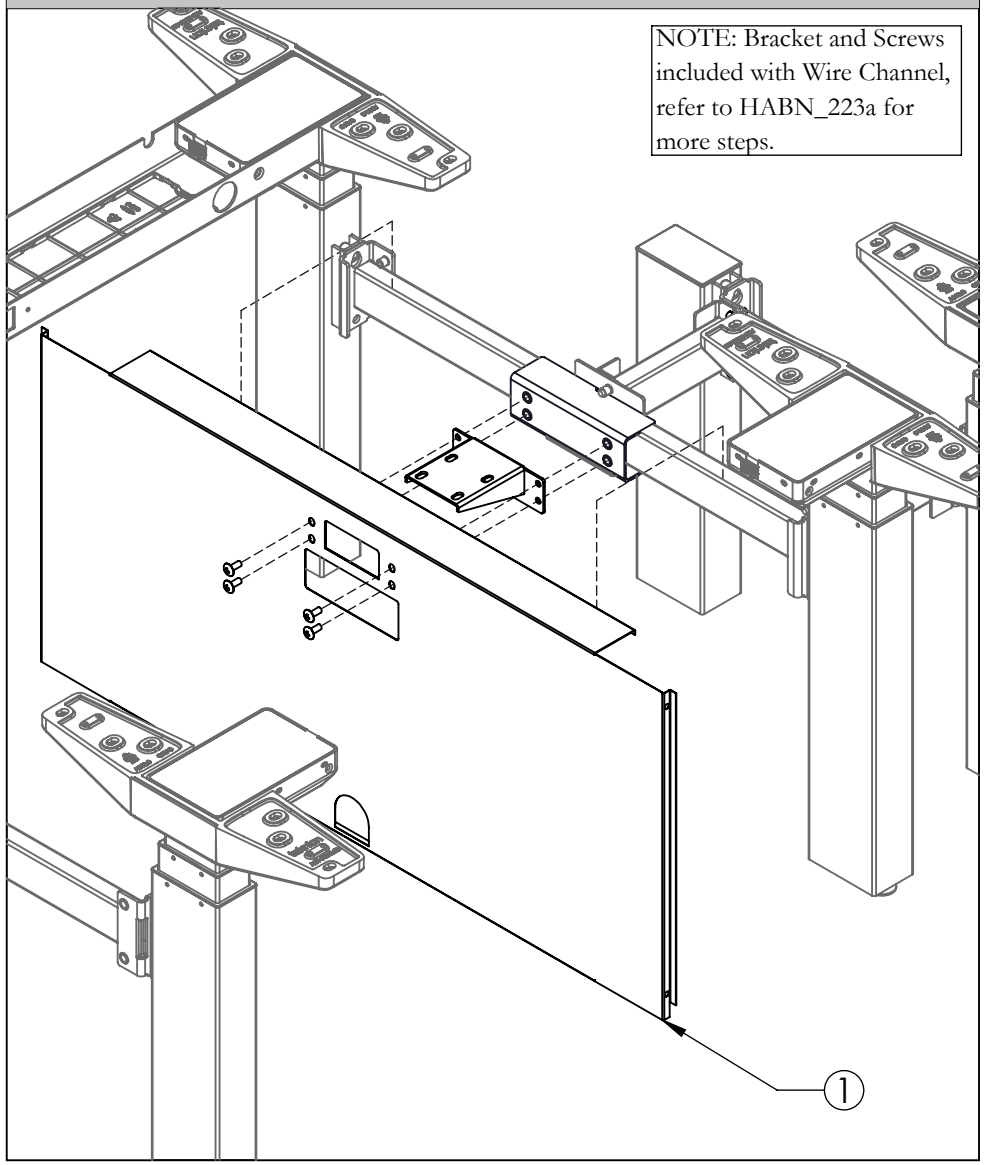

STEP 4: Place bracket behind Side Cover assembly, then hook Side Cover over the stretcher bar and screw into place using screws provided with Wire Channel.

ATTACH SIDE COVER

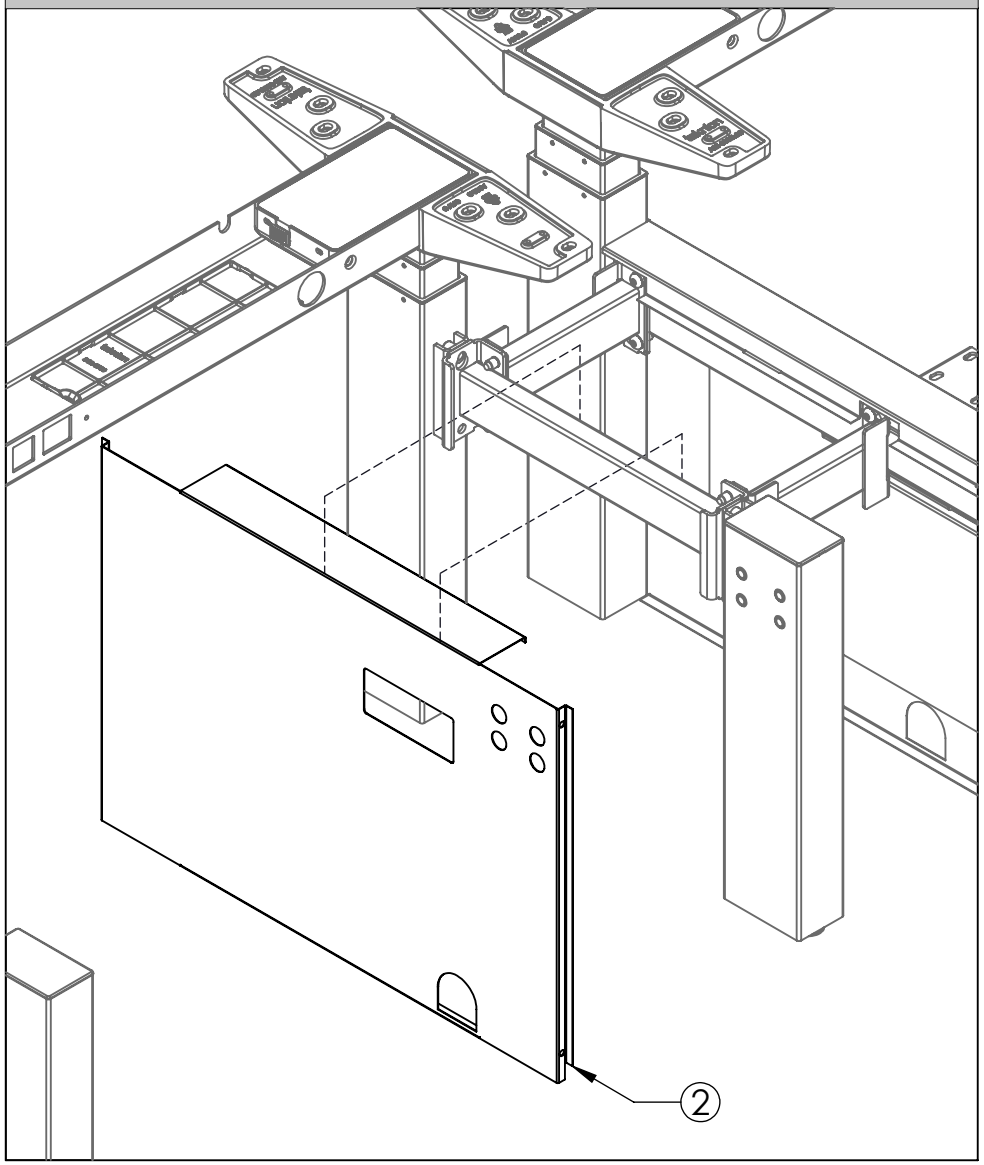

STEP 5: Hook Side Cover over stretcher bar on Single-Sided Frame.

INSTALL BACK COVER

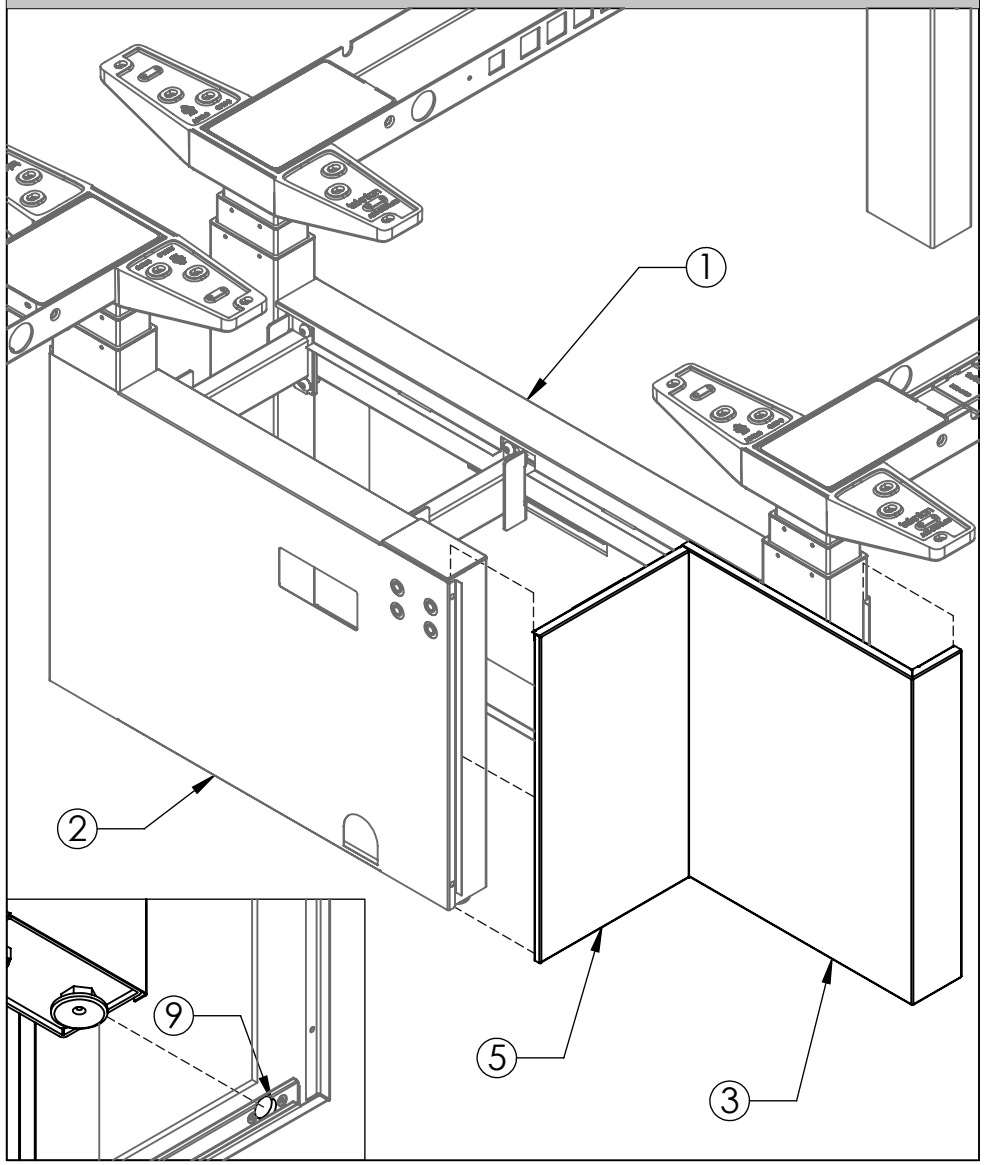

STEP 6: Hook Back Cover assembly over the corners of rhe Side Covers. The magnet should stick to the leg of the Single-Sided Frame.

ATTACH FRONT COVER

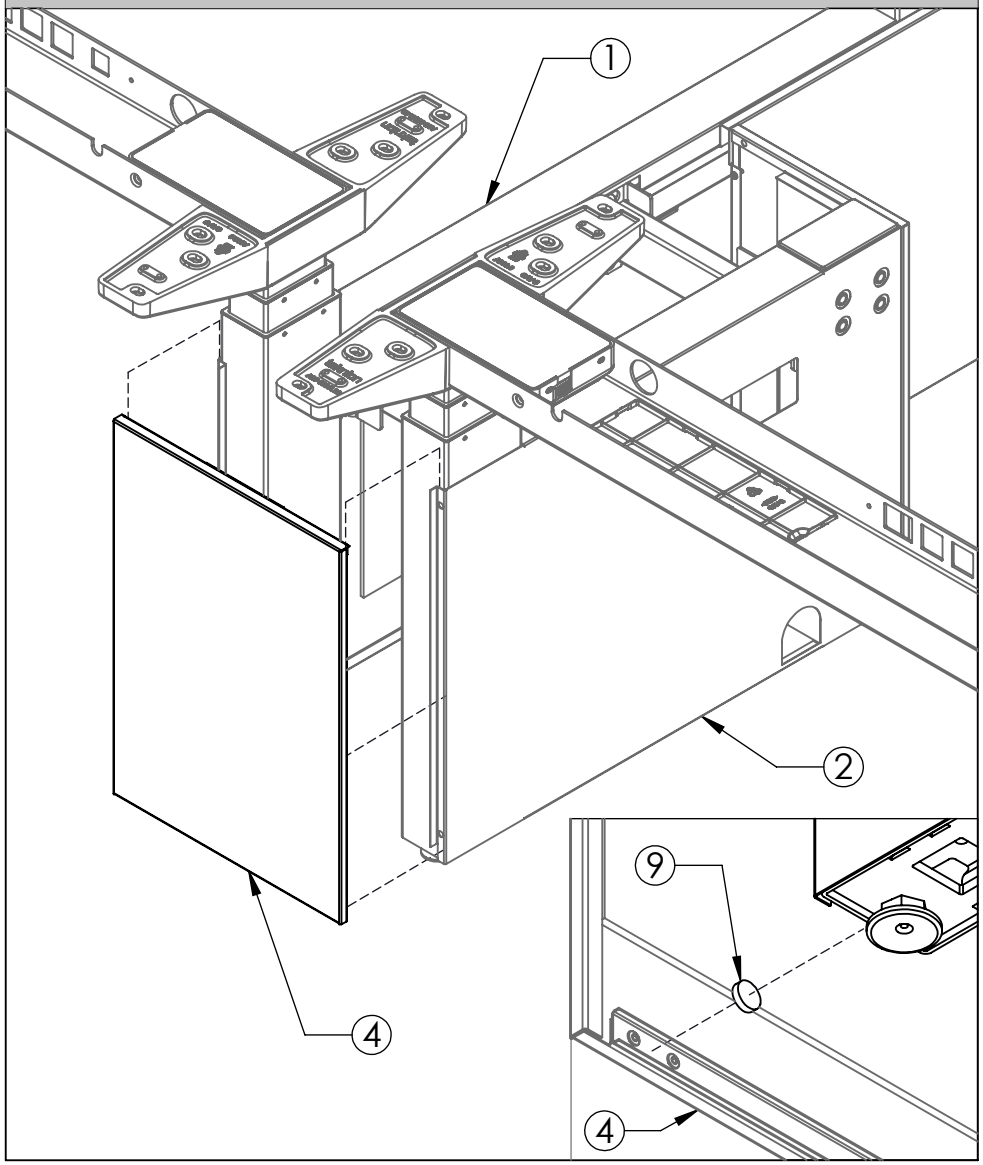

STEP 7: Place magnets in between the rivets at the bottom of the Front Cover. Hook corners of the Front Cover over the corners of the Side Covers. The Magnets should stick to the legs of the frames.

PLACE TOP COVER ON GABLE

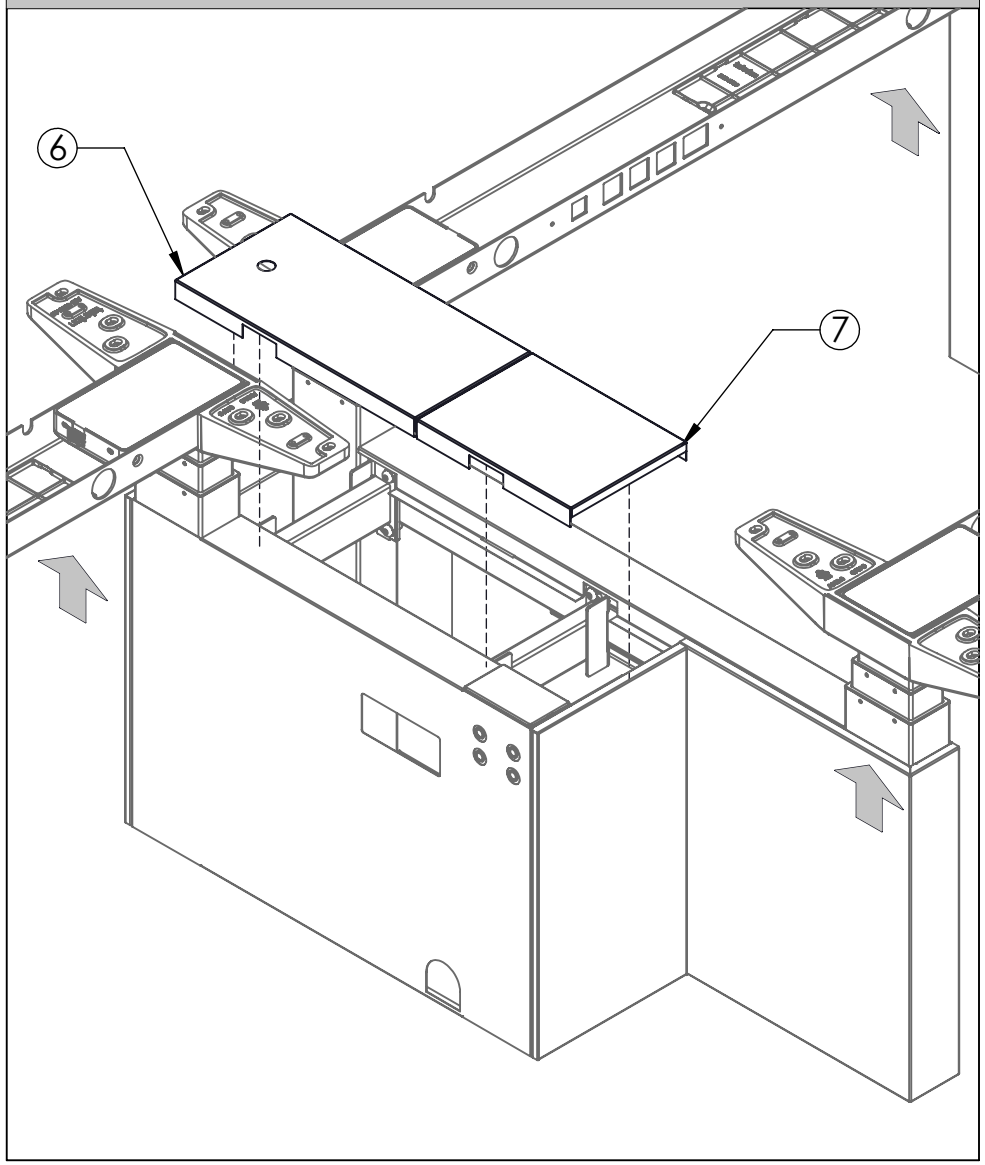

STEP 8: Raise the tables, then place the Top Cover on top of the gable assembly.

Navigate Transition Mid Gable - Solid (HNBCGMSR)

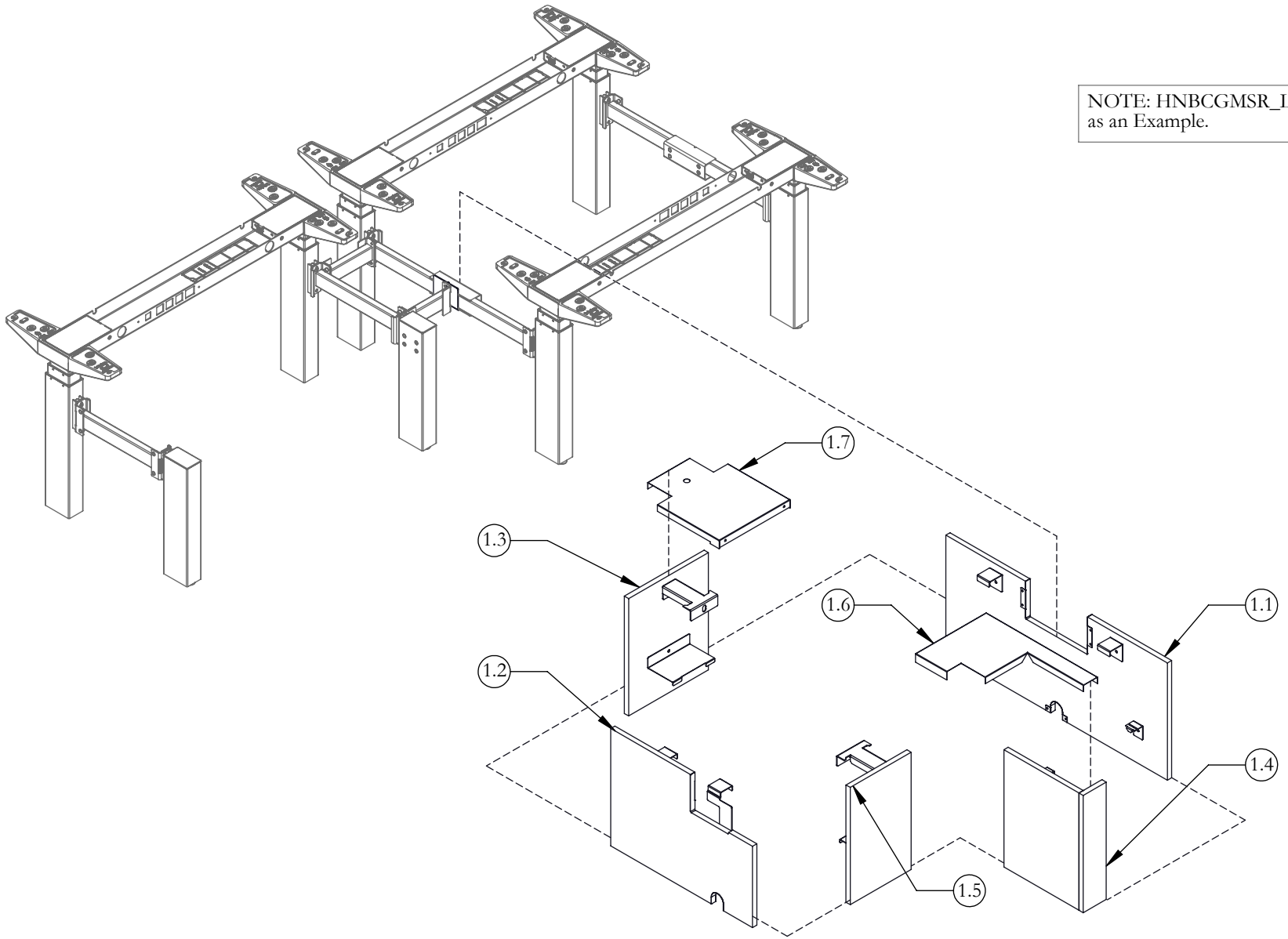

NOTE: HNBCGMSR_L is Shown as an Example.

Part & Product Identification

ITEM NO.	PREVIEW	DESCRIPTION	PART NUMBER	QTY.
1. NAVIGATE TRANSITION MID GABLE, SOLID (HNBCGMSR)x1				
1	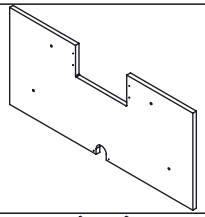	SIDE COVER FOR MID GABLE, DOUBLE SIDED, HAB	C07-4593X-X	1
2	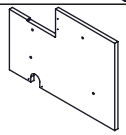	SIDE COVER FOR MID GABLE, SINGLE SIDED, HAB	C07-4718R-X	1
3	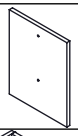	FRONT COVER FOR MID GABLE, HAB	C05-8864	1
4	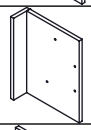	TRANSITION MID GABLE COVER, HAB	N09-8809L-X	1
5	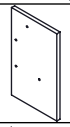	BACK COVER FOR TRANSITION GABLE, HAB	C07-5127L	1
6	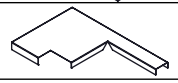	TOP COVER FOR WOOD TRANSITION MID GABLE, HAB	A16-7570L-X	1
7	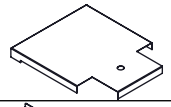	TOP COVER FOR WOOD MID GABLE W/POWER POLE, DOUBLE SIDED, HAB	A16-7456-X	1
8	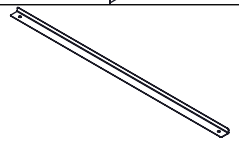	GABEL BOTTOM ANGLE BAR, DOUBLE SIDED, HAB	A16-7462-X	1
9		MID GABEL BOTTOM ANGLE BAR, SINGLE SIDED, HAB	A16-7572-X	1

Part & Product Identification

ITEM NO.	PREVIEW	DESCRIPTION	PART NUMBER	QTY.
1. NAVIGATE TRANSITION MID GABLE, SOLID (HNBCGMSR)x1				
10	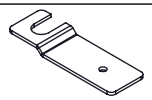	GABEL CONNECTING PLATE	A16-3651	4
11		HANGING BRACKET, FOR WOOD MID GABLE, HAB	A16-3203	3
12	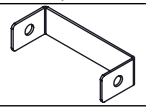	BOTTOM CONNECTING BRKT ,WOOD MID GABLE, HAB	A16-3026	3
13	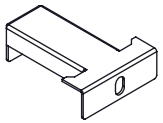	FRONT HANGING BRKT FOR WOOD MID GABLE, HAB	A16-3028	2
14	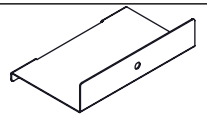	BOTTOM BRKT FOR WOOD MID GABLE, HAB	A16-3027	1
15		COVER PLATE FOR CABLE CUTOUT, HAB	A16-3689	3
16	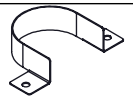	COVER PLATE FOR BASEFEED CUTOUT, HAB	A16-3690	2
17	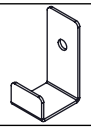	HANGING BRACKET, FOR SOLID TRANSITION GABLE, HAB	A16-7837	1
18	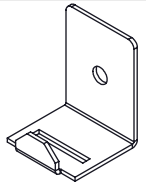	HANGING BRACKET, FOR SOLID TRANSITION GABLE, HAB	A16-7838	2
19	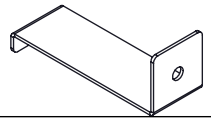	BOTTOM BRKT FOR WOOD TRANSITION GABLE, HAB	A16-7839	1

Part & Product Identification

ITEM NO.	PREVIEW	DESCRIPTION	PART NUMBER	QTY.
1. NAVIGATE TRANSITION MID GABLE, SOLID (HNBCGMSR)x1				
20	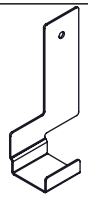	HANGING BRACKET, FOR WOOD MID GABLE, SINGLE SIDED, HAB	A16-7569R	1
21	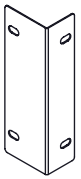	CORNER BRKT, TRANSITION SOLID MID GABLE, HAB	A16-7732	1
22	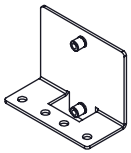	BRACKET ASSY. FOR TRANSITION GABLE, HAB	N09-9089	1
23	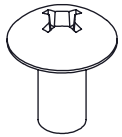	1/4-20 UNCx0.500" 2A,CROSS/SQ.COMB.SOCK.,TRS.HEAD,MACH.SCR.,STEEL,ZN	E01-0110	20
24	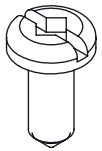	#10X1/2" TAP SCR, QUAD,PAN	E01-0023	4
25	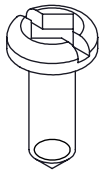	SCREW, WOOD,#6 X 7/16", DEEP THREAD, QUAD, TRUSS	E04-0050	10

INSTALL BRACKET

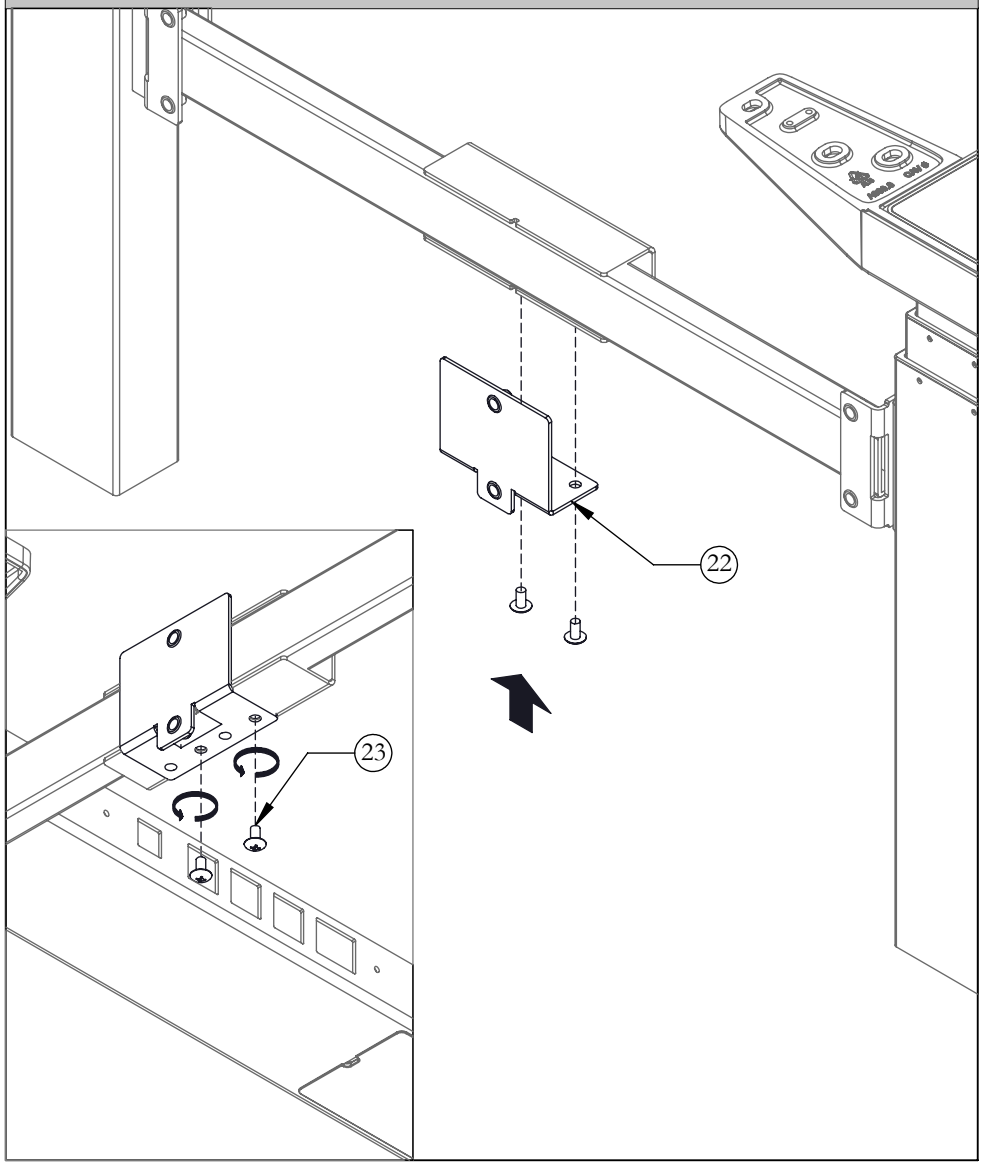

STEP 1:Attach Bracket to Stretcher bar using Screws provided.

INSTALL FRAME LINK

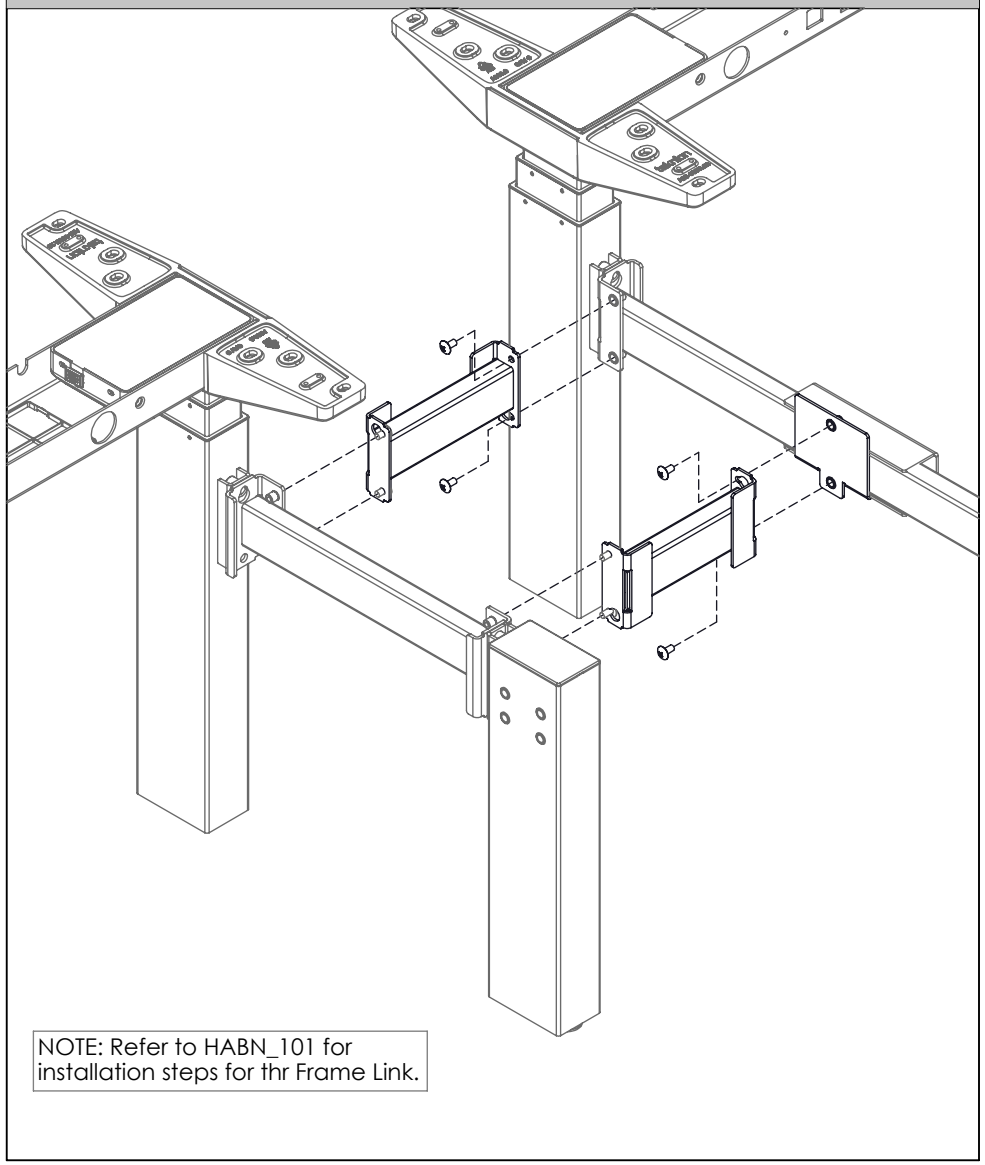

STEP 2: Install Frame Link to join both frames.
NOTE: Refer to HABN_101 for installation steps. Frame Link must be ordered seperately.

ATTACH CONNECTING PLATES

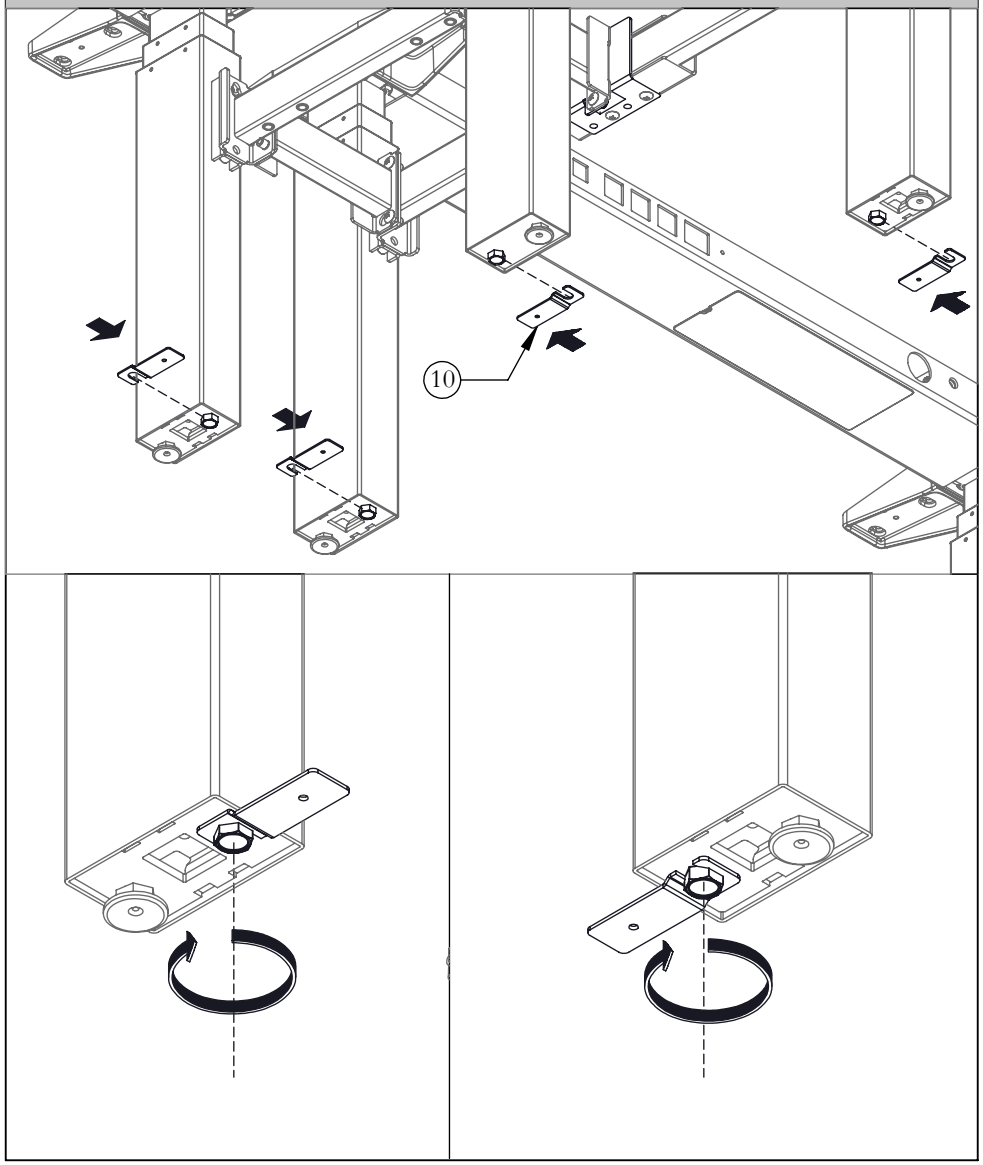

STEP 3: Loosen Hex Bolt to allow enough room for gable connecting Plate. Fasten Gable Connecting plates to the Frame Legs. Secure the Gable Connecting Plates.

MOUNT BOTTOM ANGLE BAR

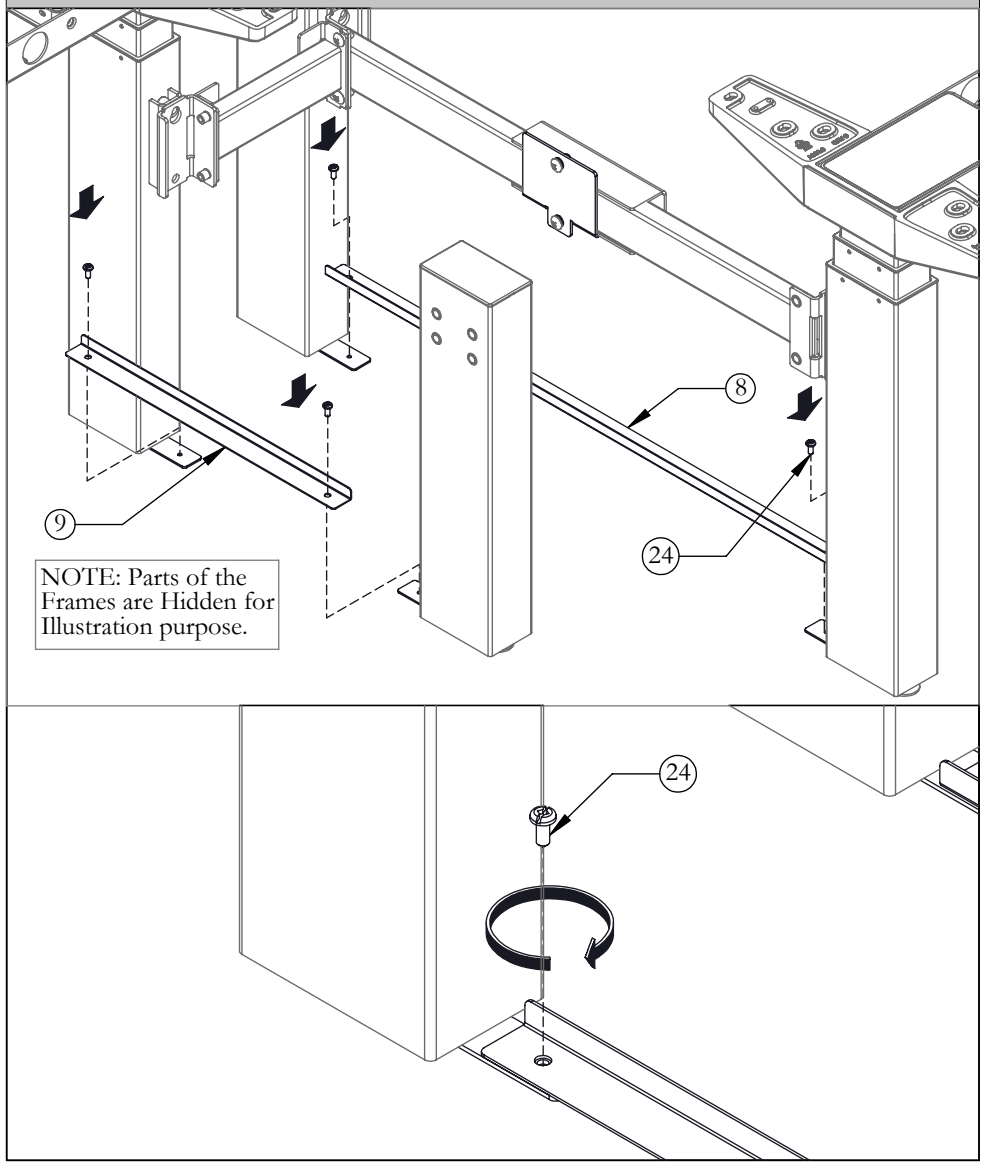

STEP 4: Mount both Bottom Angle Bars and Secure to Gable Connecting Plates on both sides using Tap Quad Pan Screws provided.

ATTACH MID GABLE SUPPORT BRACKETS

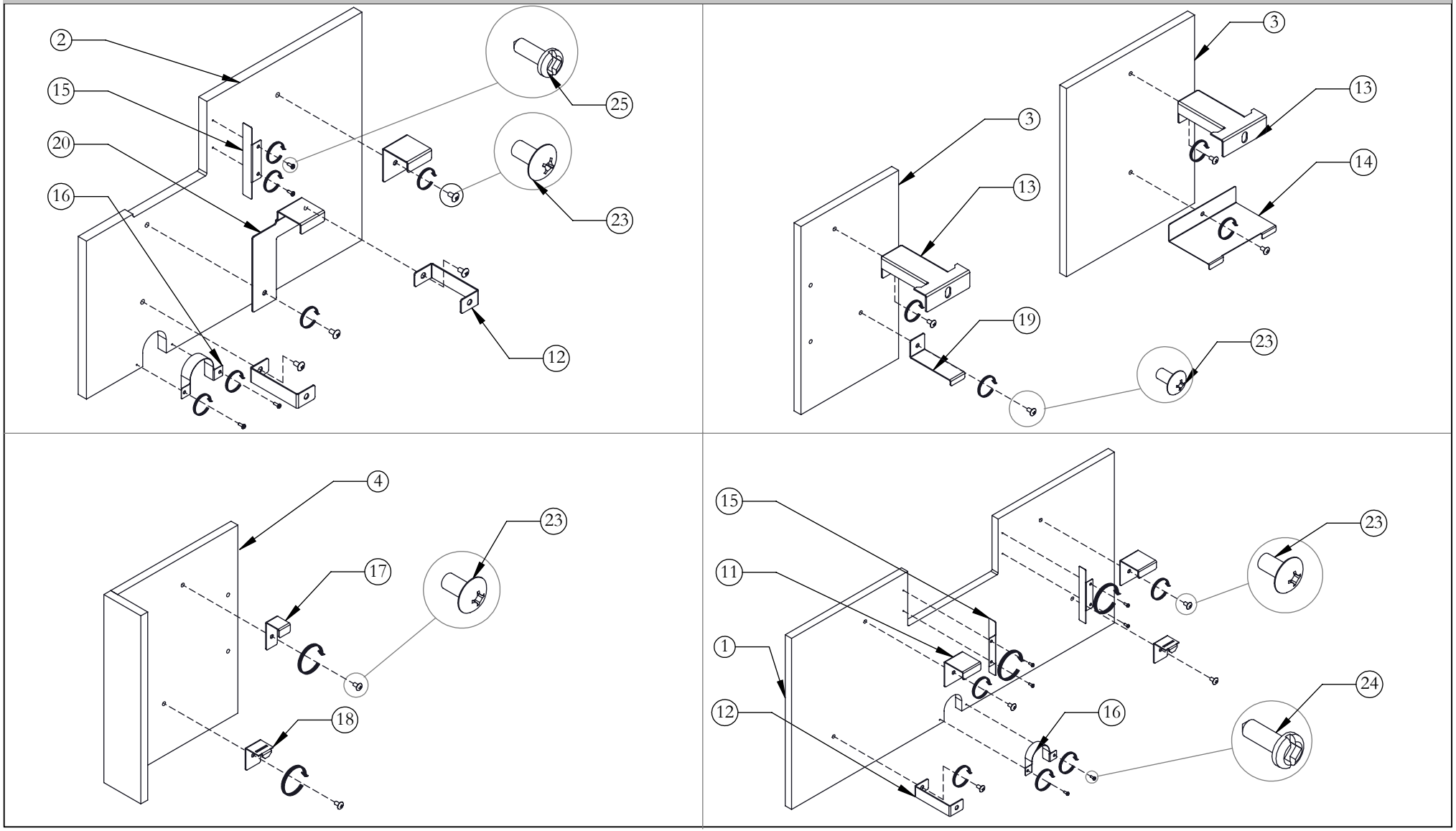

STEP 5: Secure the Brackets and Cover Plates to Side cover, Back Cover, Front Cover and Transition Cover as shown. Rotate Screws Clockwise to Fasten.

MOUNT SIDE COVER ASSEMBLY

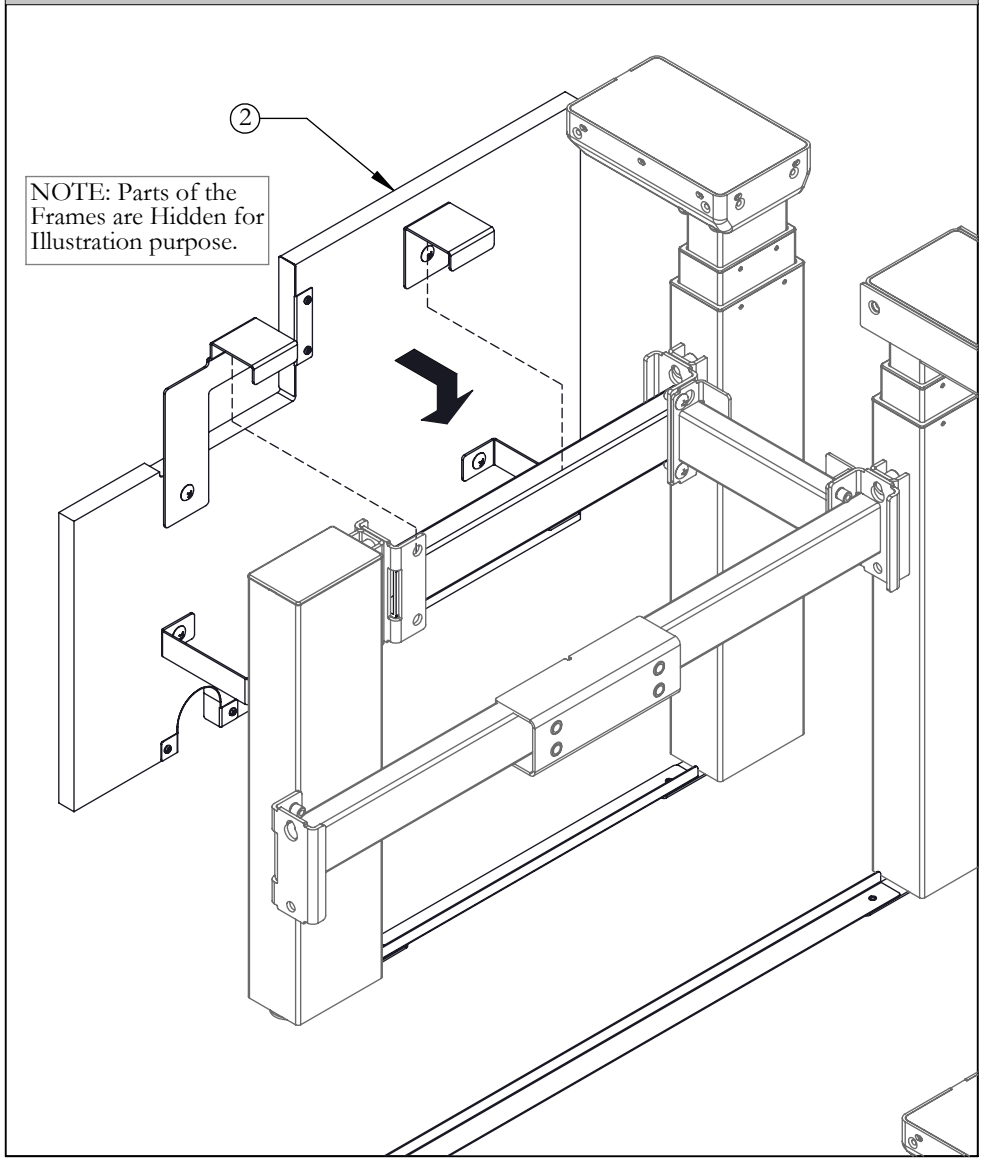

STEP 6: Mount the Side Cover Assembly for Single Sided frame ontothe Stretch Bar As shown.

MOUNT BACK COVER ASSEMBLY

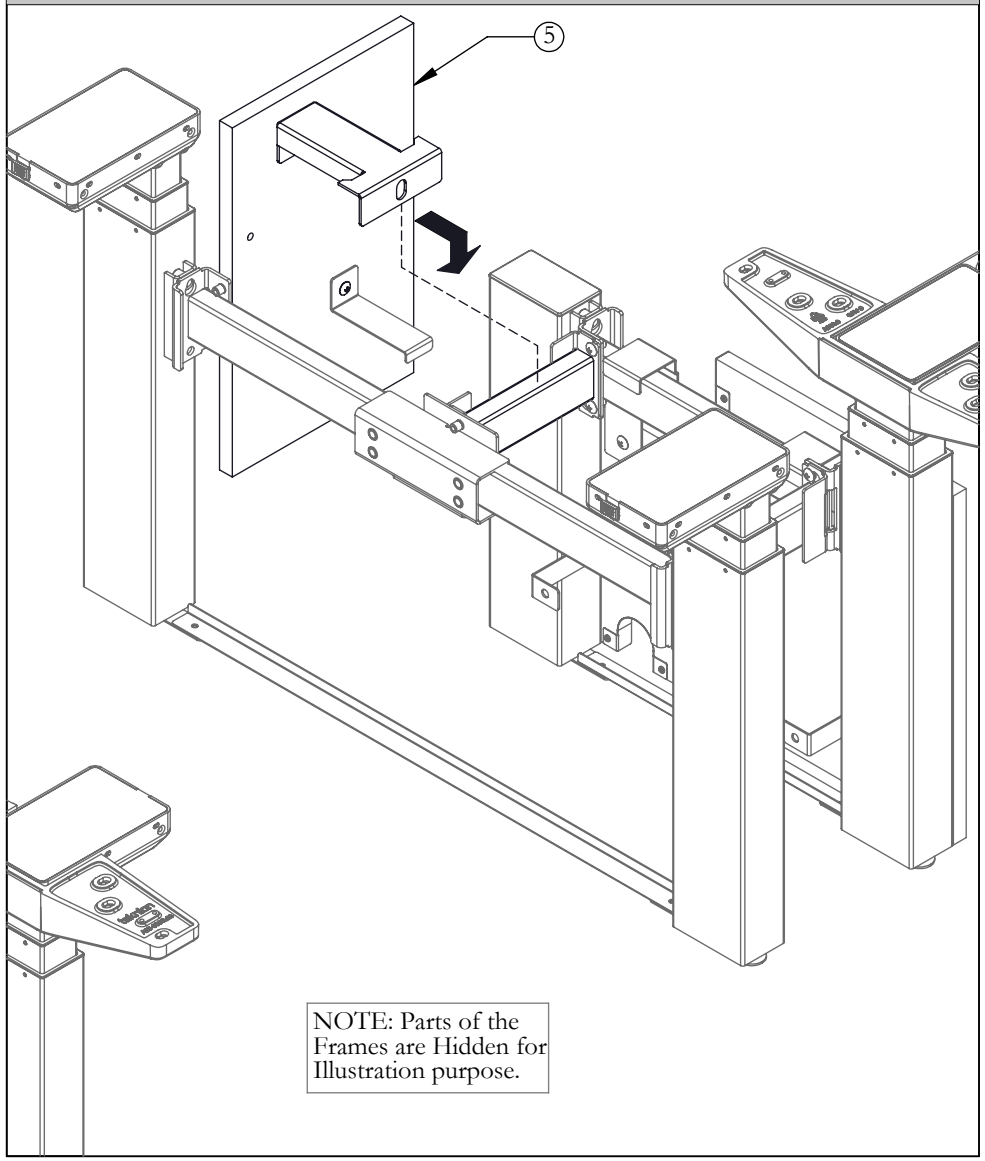

STEP 7: Mount the Back Cover Assembly for Transition onto the Frame Link As shown.

ATTACH TRANSITION GABLE COVER

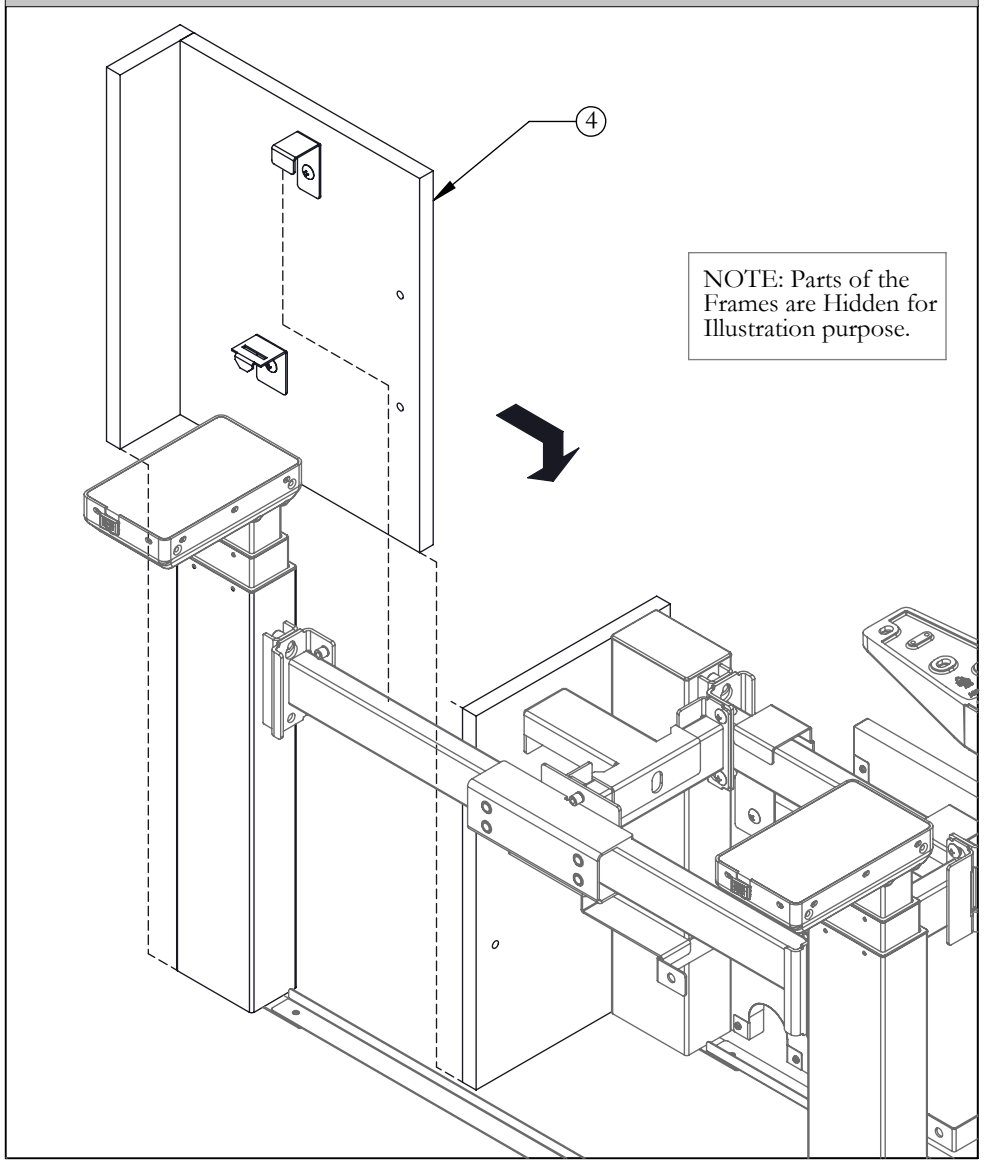

STEP 8: Attach the Transition Gable Cover assembly. Place the Hanging Bracket onto the Stretch Bar.

SECURE TRANSITION GABLE COVER

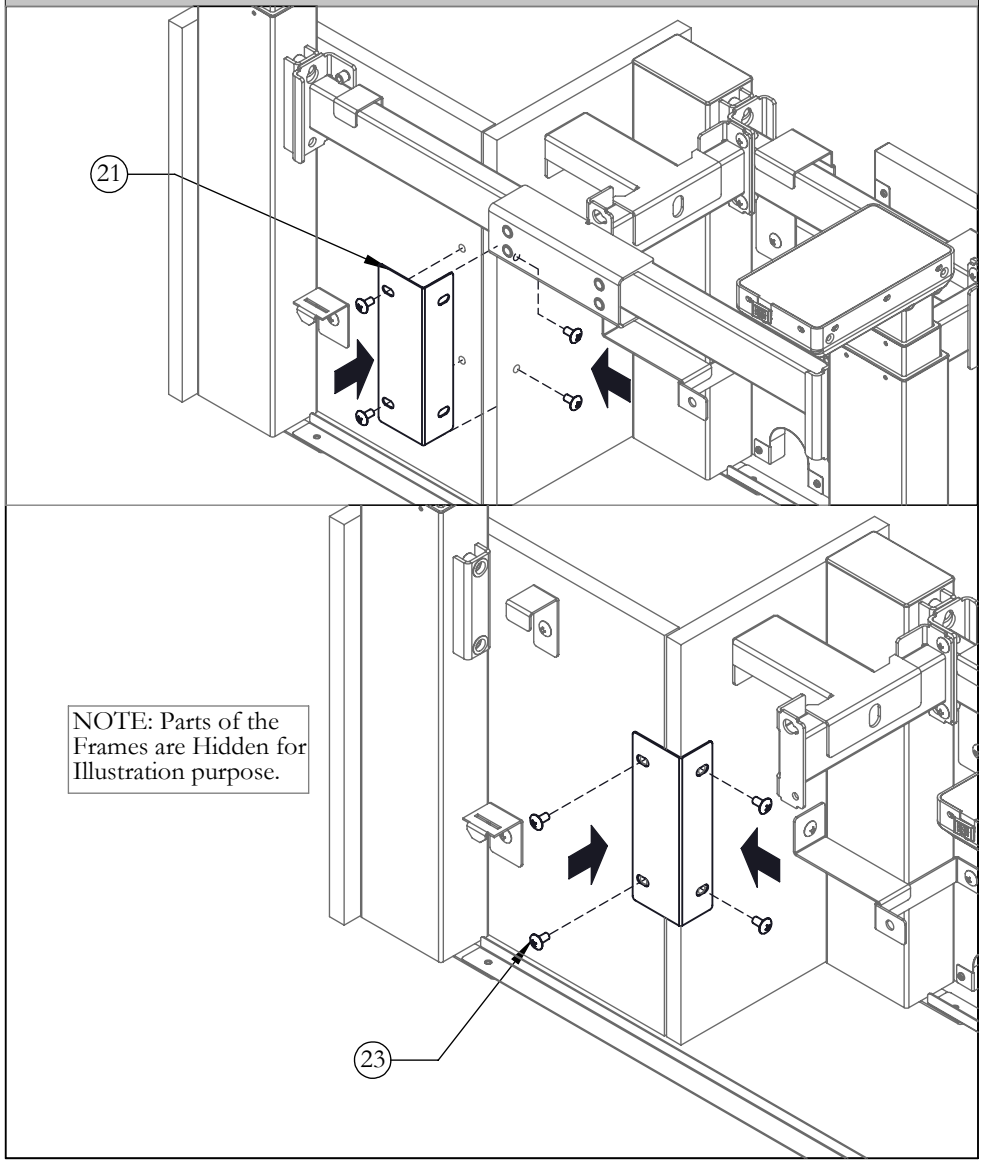

STEP 9: Secure the Transition Gable Cover Assembly to Back Cover using the Corner Bracket..

MOUNT SIDE COVER ASSEMBLY

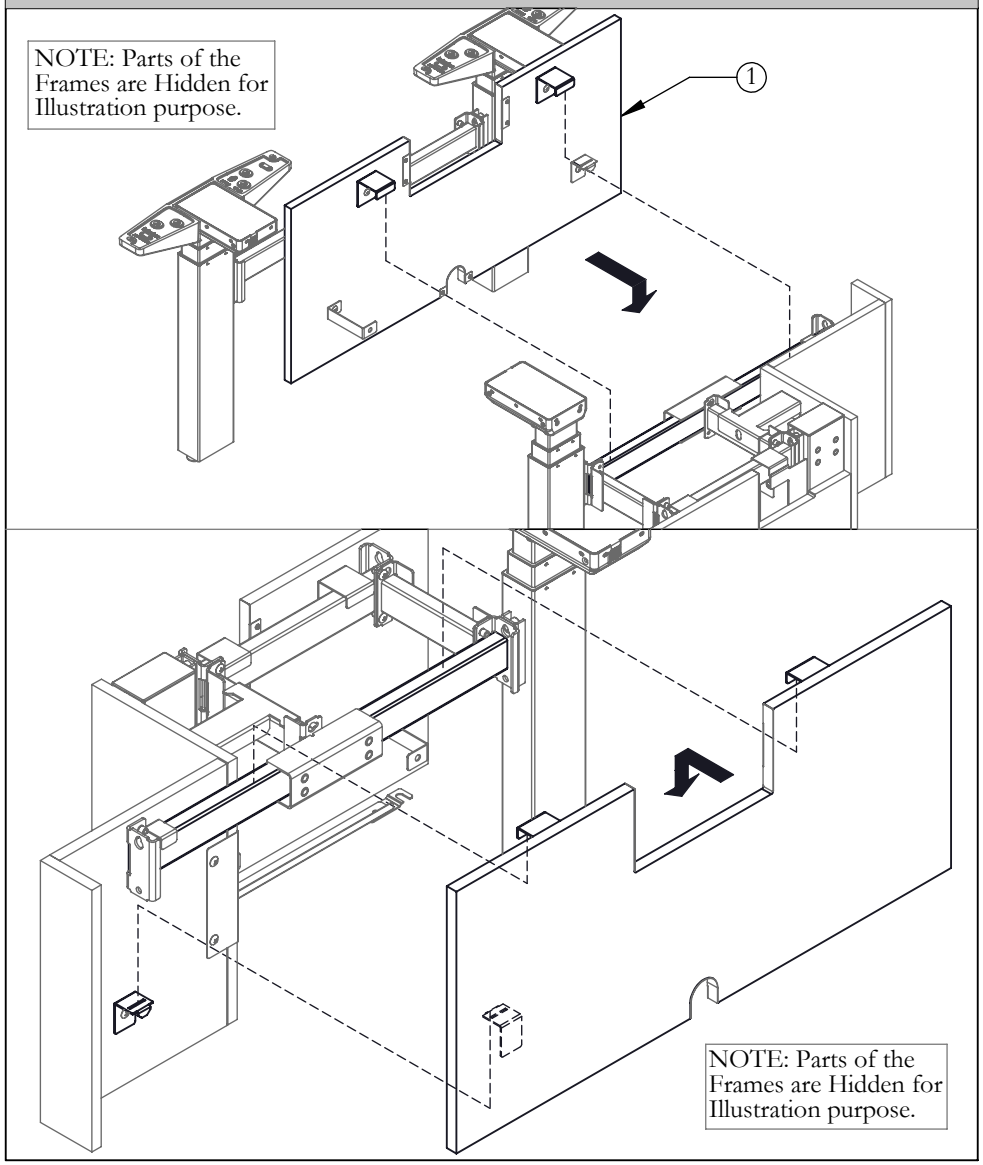

STEP 10: Mount Side Cover Assembly onto the Stretch Bar. Make sure the hang bracket engages with the bracket on Transition Gable cover.

MOUNT FRONT COVER ASSEMBLY

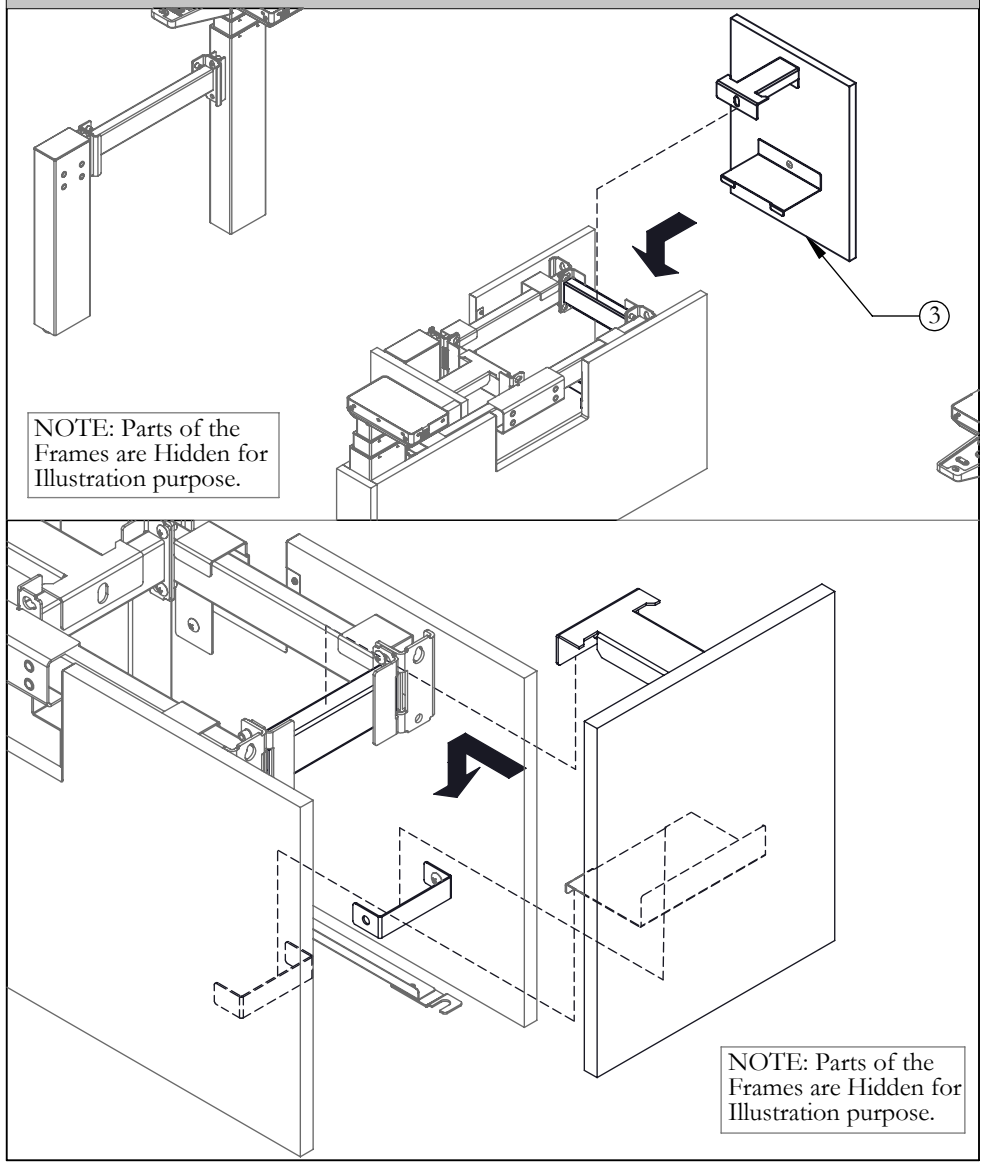

STEP 11: Mount Front Cover onto the Stretch Bar Assembly. Make Sure the Bottom Bracket engages with the Connecting bracket on Side Cover.

ATTACH TOP COVER

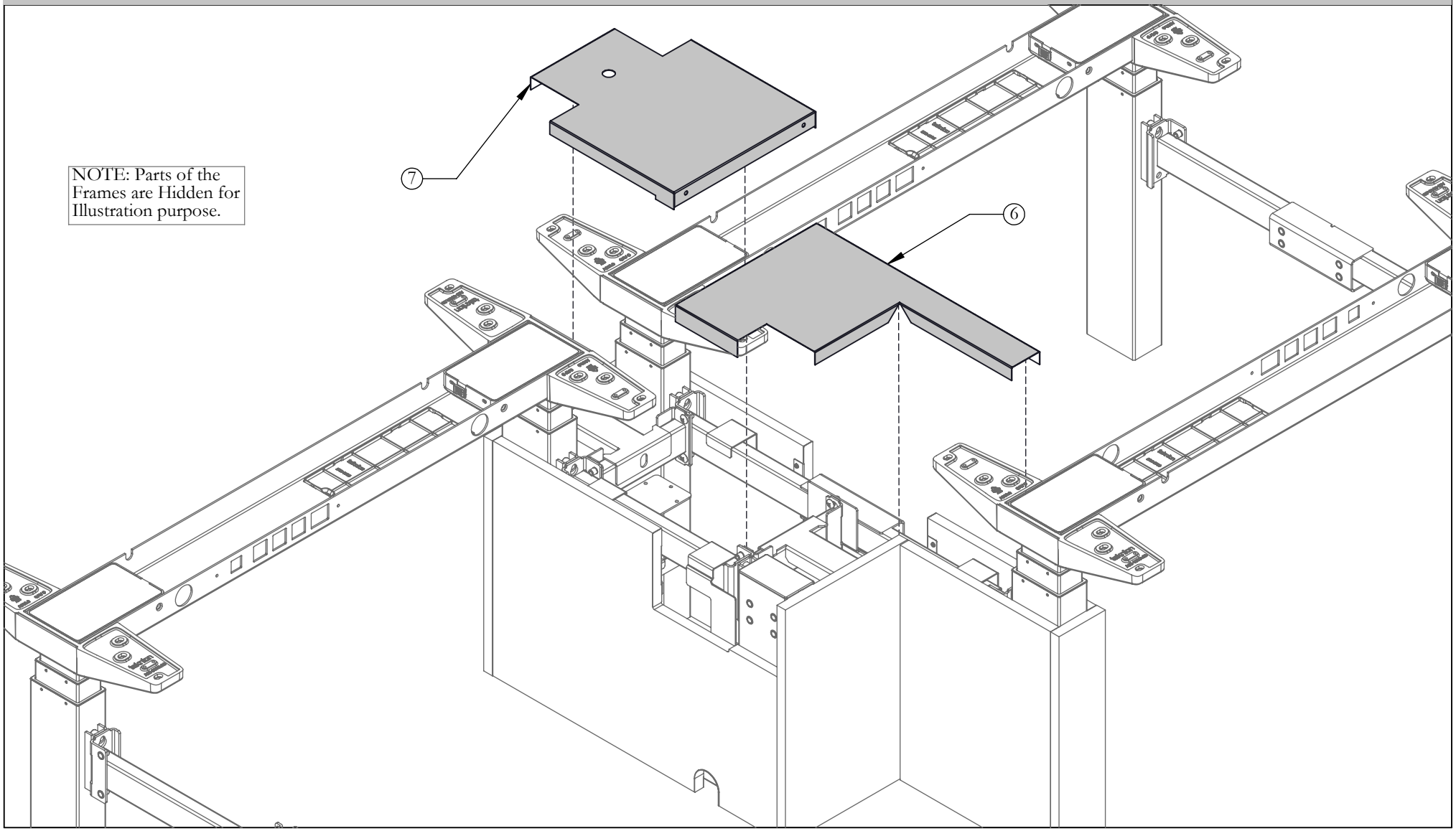

STEP 12: Rest Top Cover ontoGable Assembly as shown.

NAVIGATE END SCREEN, SOLID, DOUBLE SIDED (HNBTES)

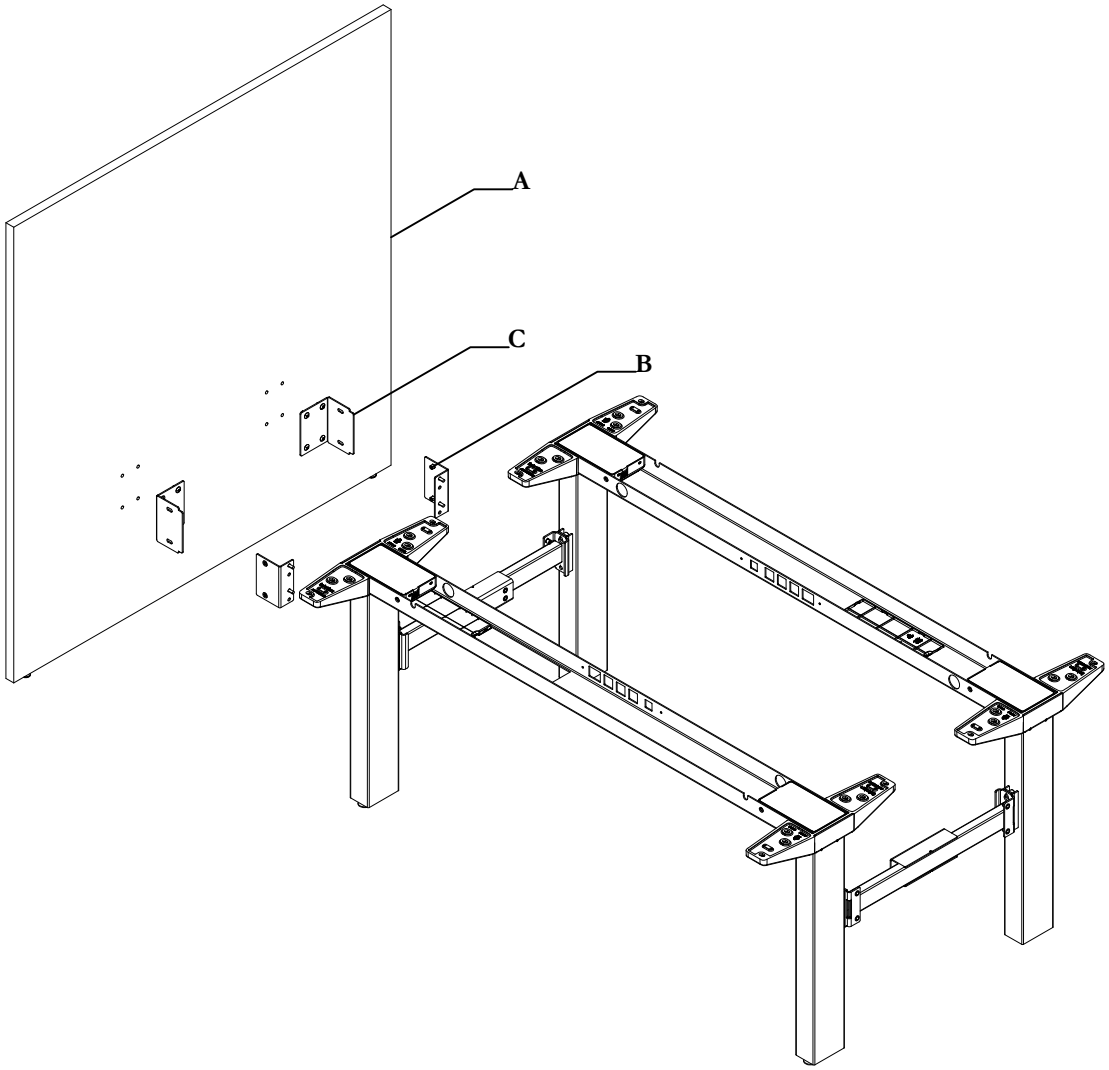

Part and Product Identification

A - Part name
(Part Number) xQty

A - End Screen, solid
(C07-5200x-x) x1

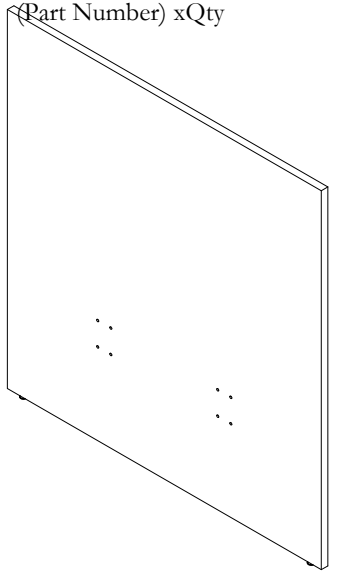

B - End Screen Bracket Assembly
(N09-9090) x2

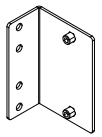

C - End Screen Bracket
(A16-7728) x2

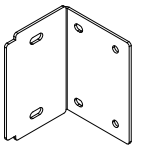

D - 5/8" Machine Screw
(E01-0113) x16



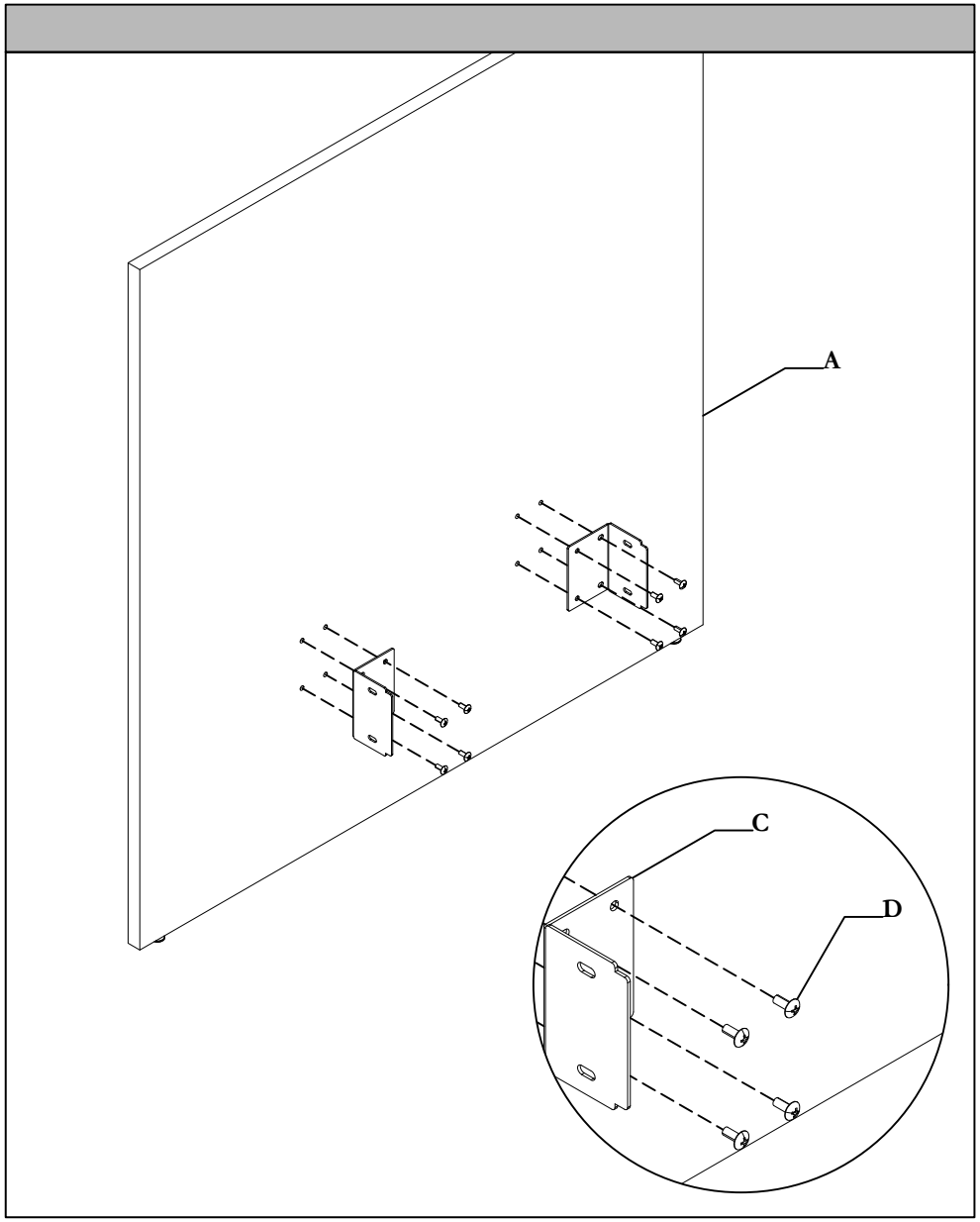

STEP 1: Attach Outer Bracket (C) to the End Screen (A) using 5/8" Screws (D).

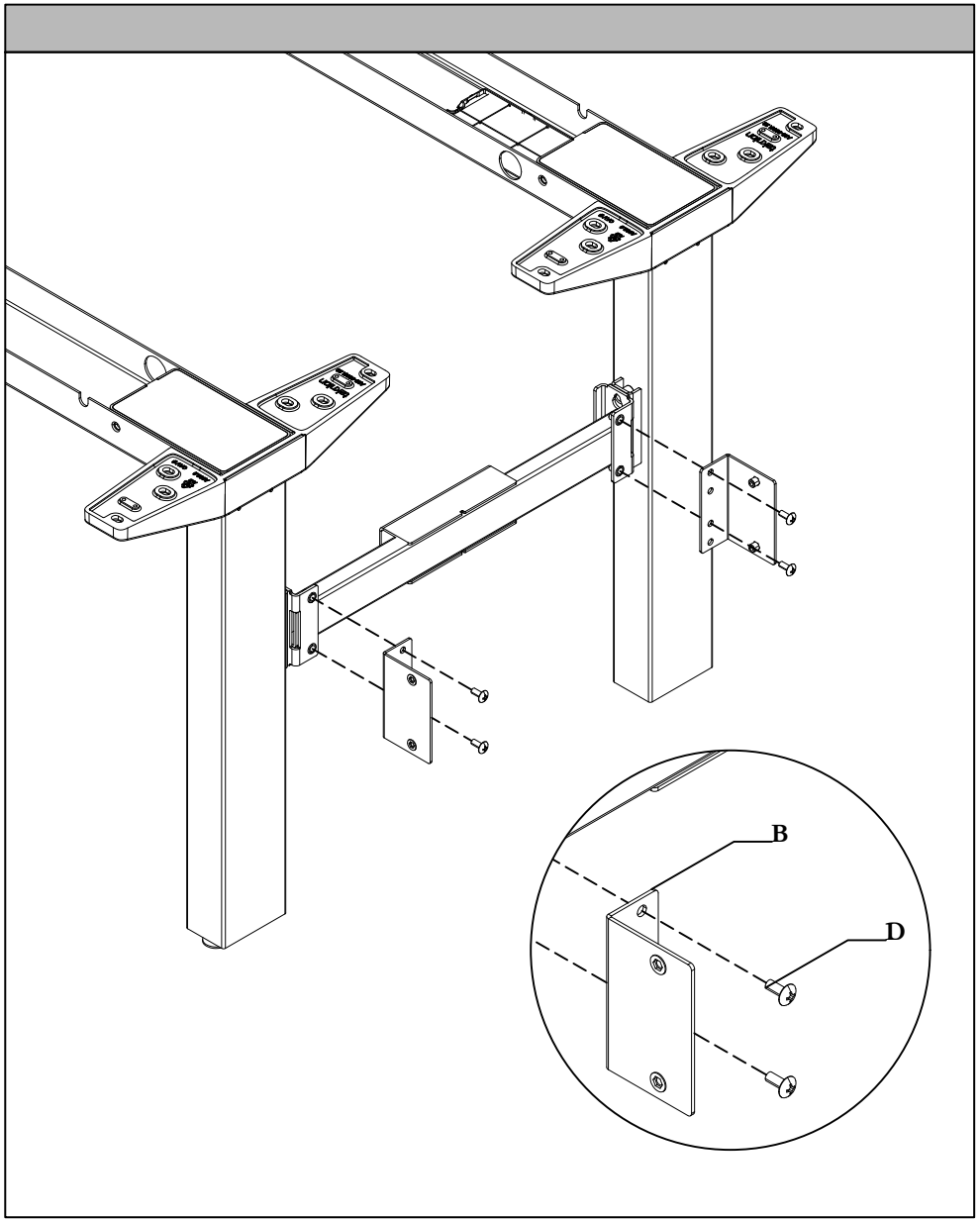

STEP 2: Secure Bracket (B) to Frame using 5/8" Screws (D).

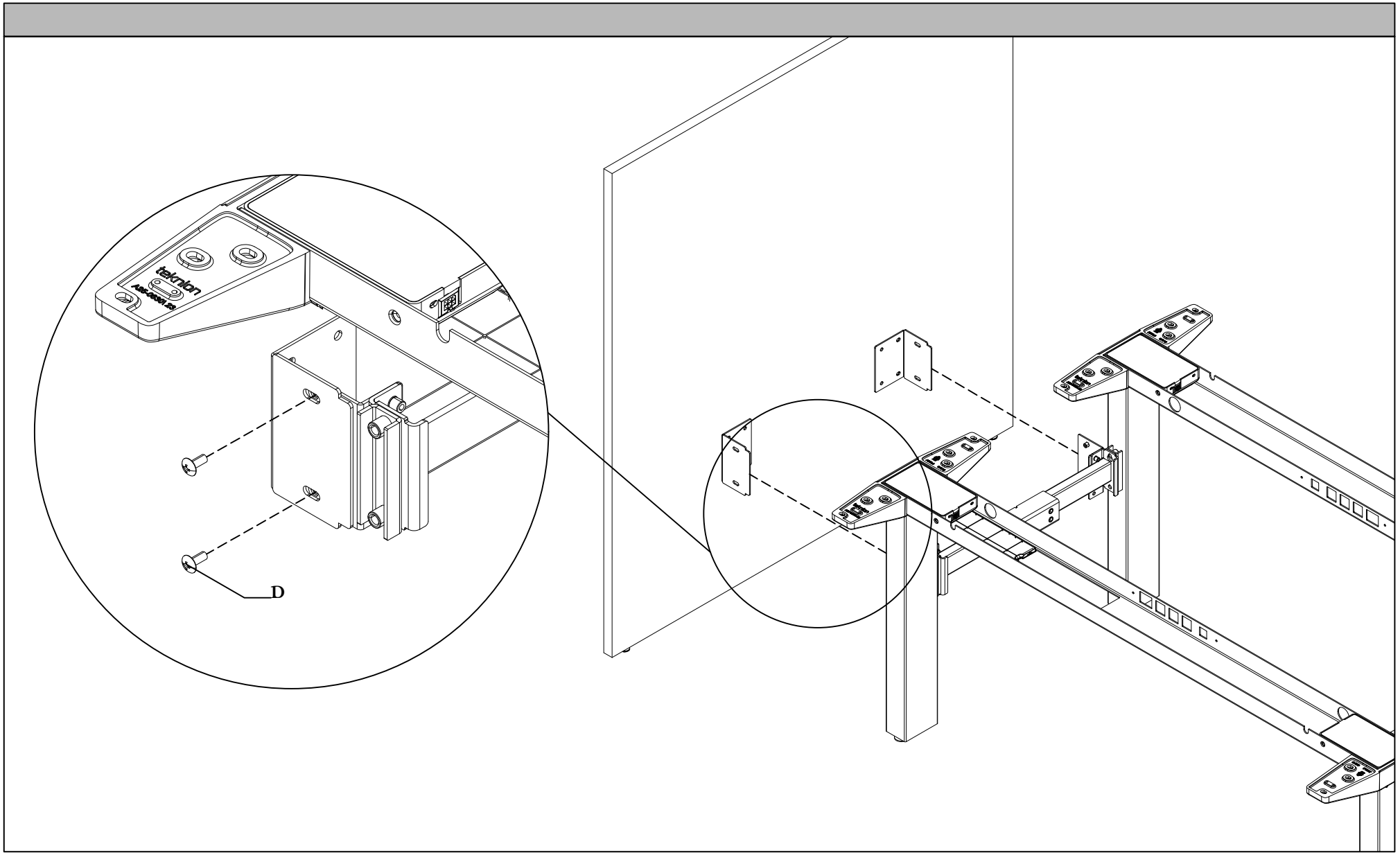

STEP 3: Attach the End Screen (A) to the frame with 5/8" Screws (D).

Navigate Single Sided Solid Screen Connection Bracket (HNBLBS)

NOTE: HNBLBS090 and HNBLBS180 is shown as an example.

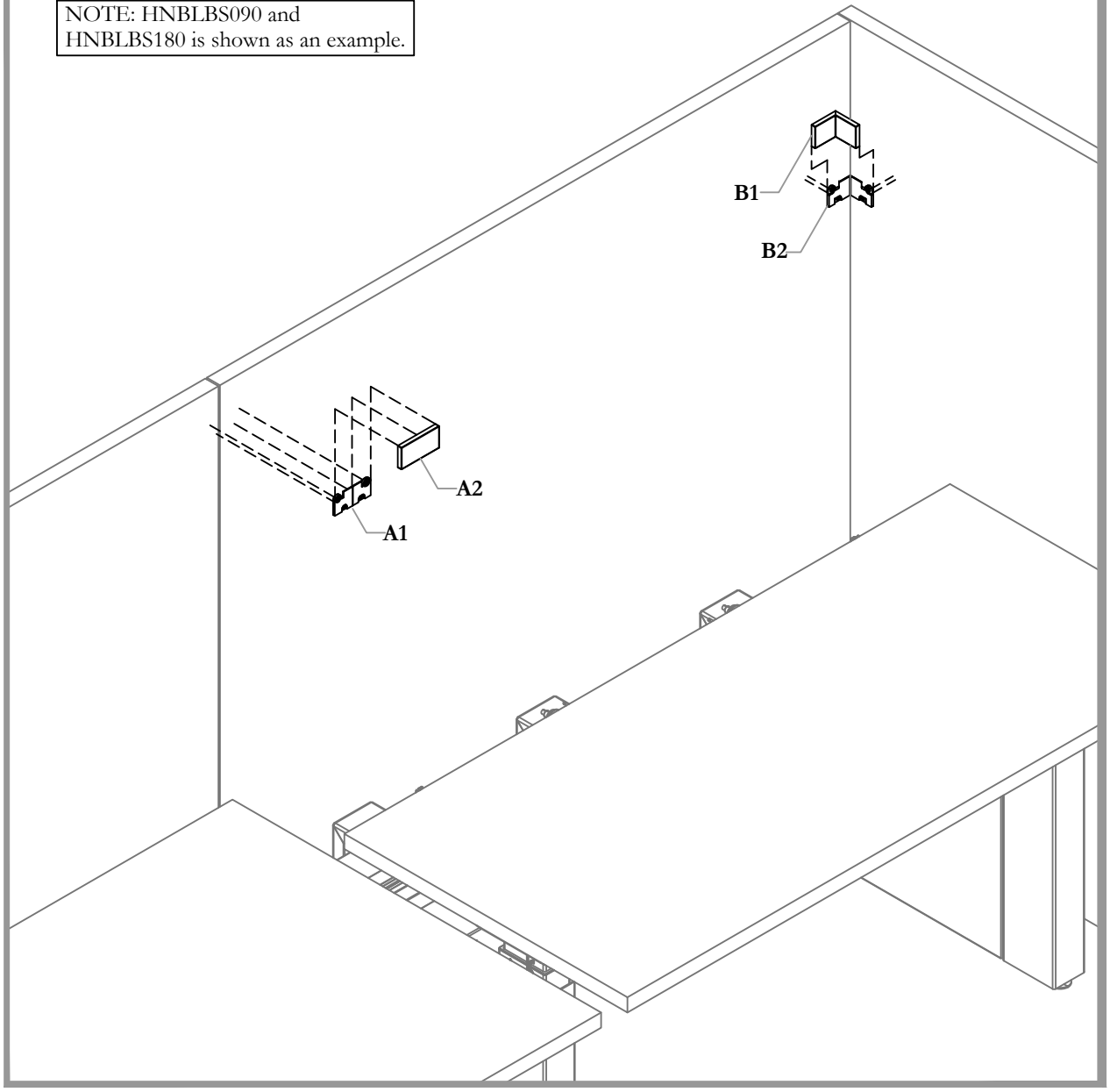

Part and Product Identification

A - Navigate Single Sided Solid Screen Connection Bracket (HNBLBS180) x1

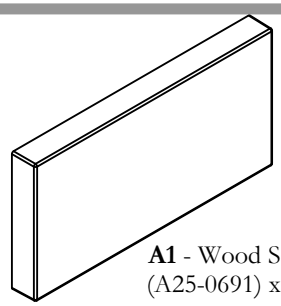

A1 - Wood Screen Alignment Cover (A25-0691) x1

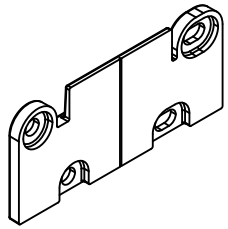

A2 - Wood Screen Alignment Plate (A25-0690) x1

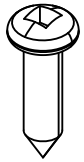

A3 - Wood Screw, #8 5x8", Pan (E07-0122) x4

NOTE: Item A and Item B has to be ordered Separately.

B - Navigate Single Sided Solid Screen Corner Connection Bracket (HNBLBS90) x1

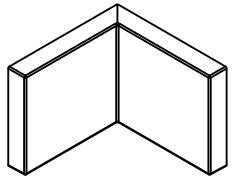

B1 - Wood Screen Corner Alignment Cover (A25-0689) x1

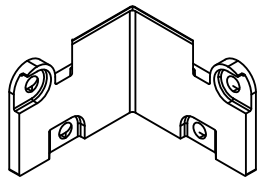

B2 - Wood Screen Corner Alignment Bracket (A25-0688) x1

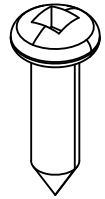

B3 - Wood Screw, #8 5x8", Pan (E07-0122) x4

POSITION ALIGNMENT COVER

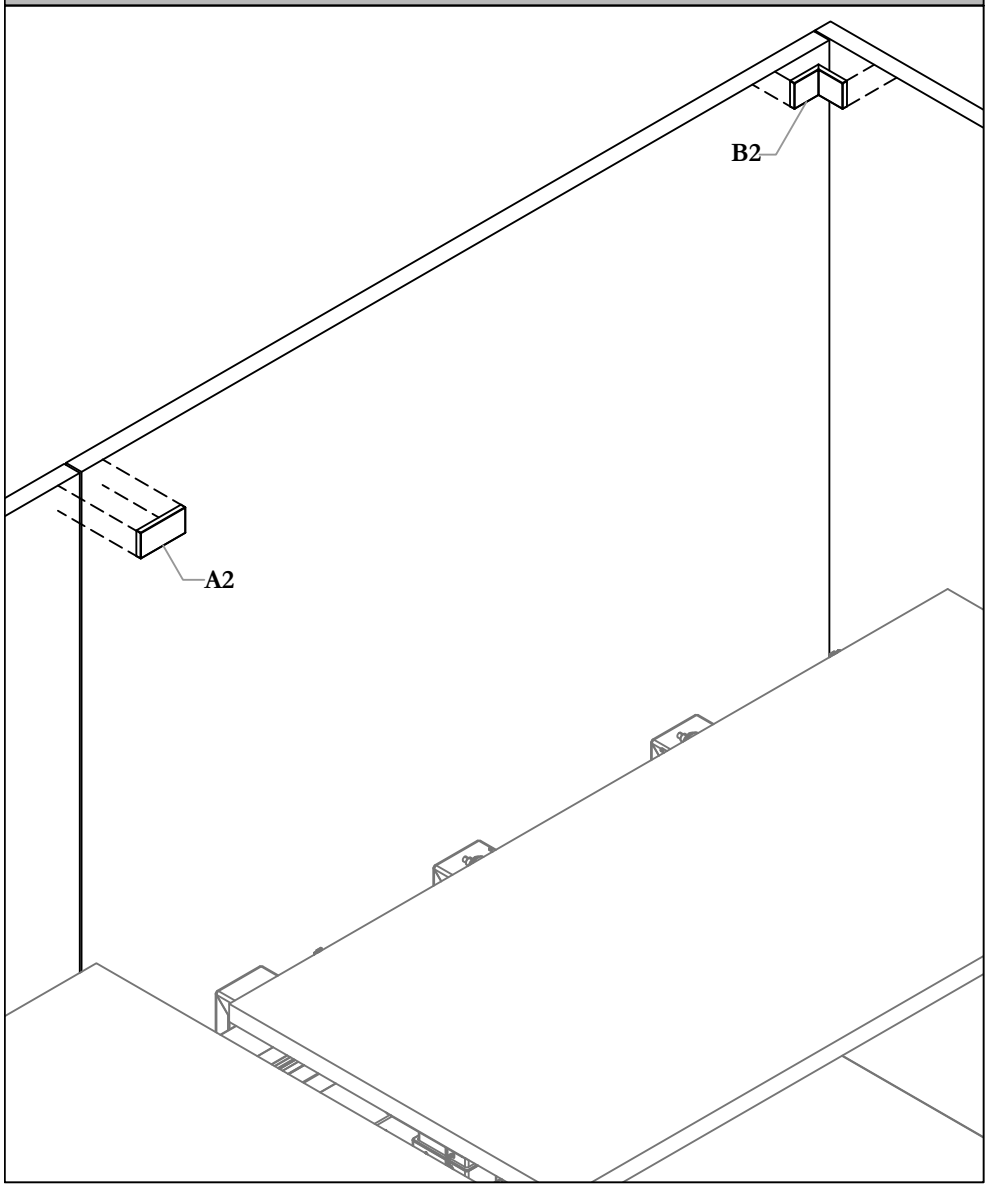

STEP 1: Position Alignment Cover to the Top edge of the Screen.

ALIGN BRACKET

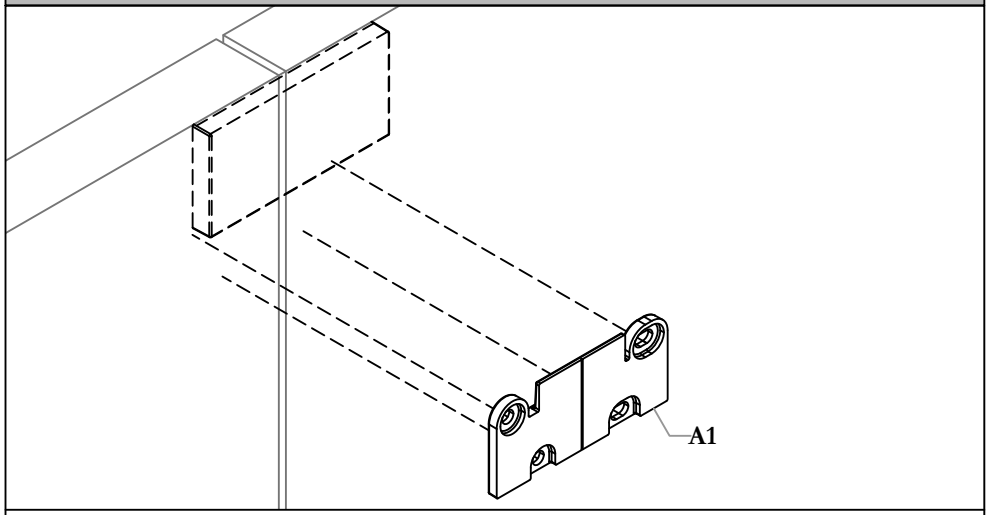

NOTE: Use the Gap created by the Alignment cover as the Clearance.

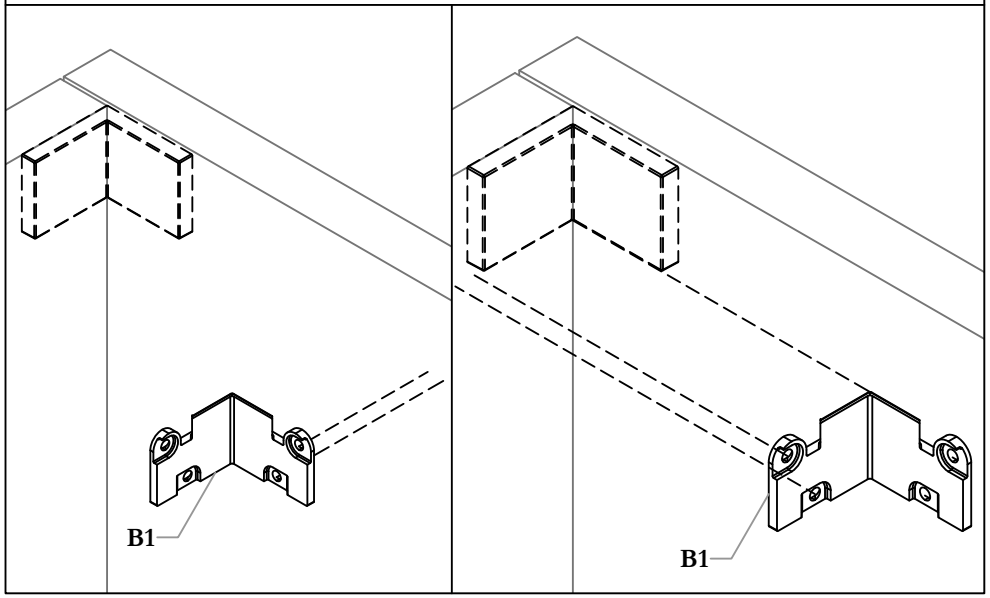

STEP 2: Align the Alignment Bracket to the Bottom Edge of the Cover, use the Alignment Cover as Clearance.

SECURE ALIGNMENT BRACKET

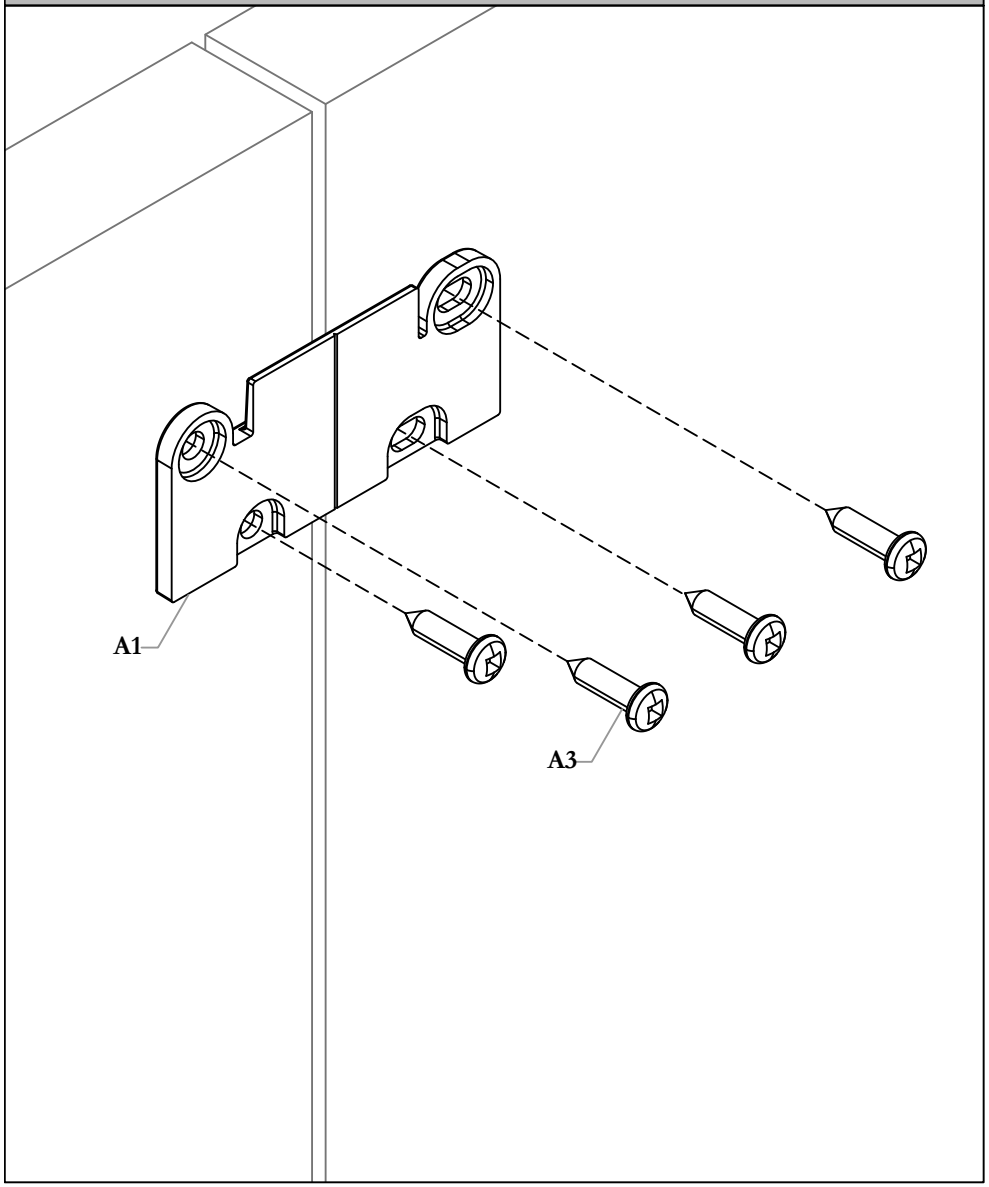

STEP 3: Secure the Alignment Bracket to the Solid Screen using the Screws Provided.

SECURE CORNER ALIGNMENT BRACKET

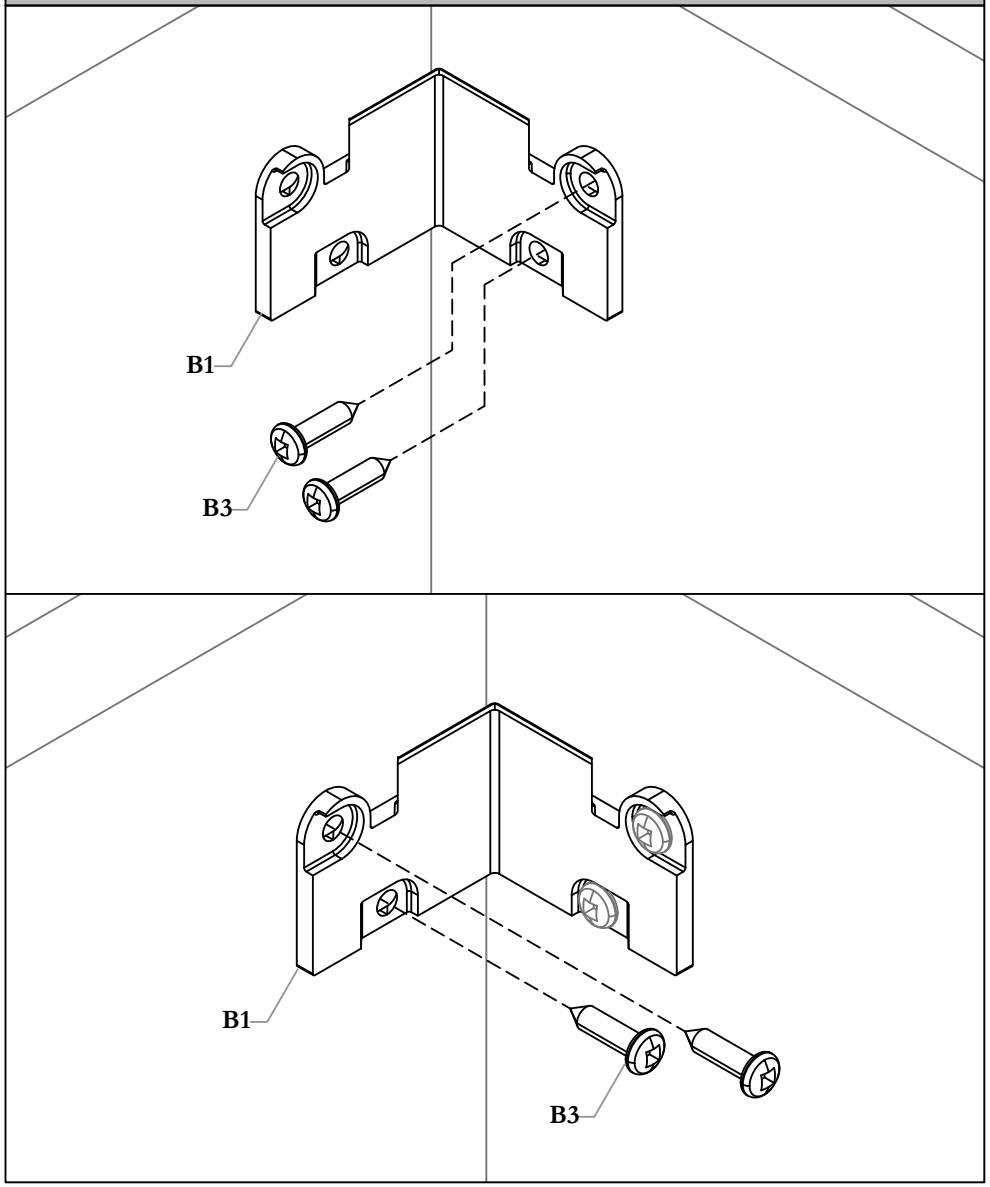

STEP 4: Secure the Corner Alignment Bracket to the Solid Screens using the Screws Provided.

MOUNT ALIGNMENT COVER

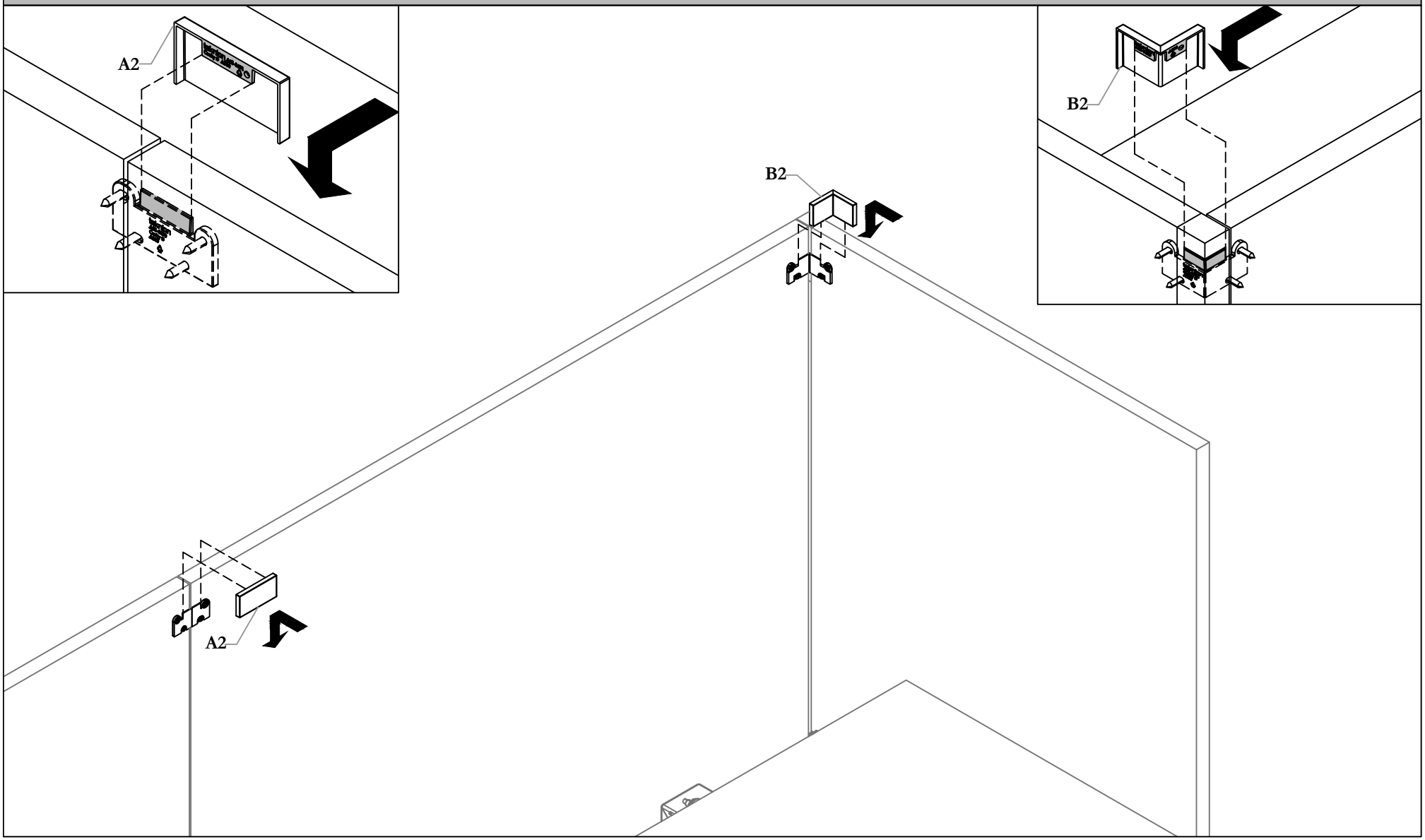

STEP 5: Mount the ALignment Cover onto the Bracket as Shown.

Navigate Power Module (HNBEPM), Navigate Receptacle Outlet (HNBERO), Navigate Power Harness (HNBEPH)

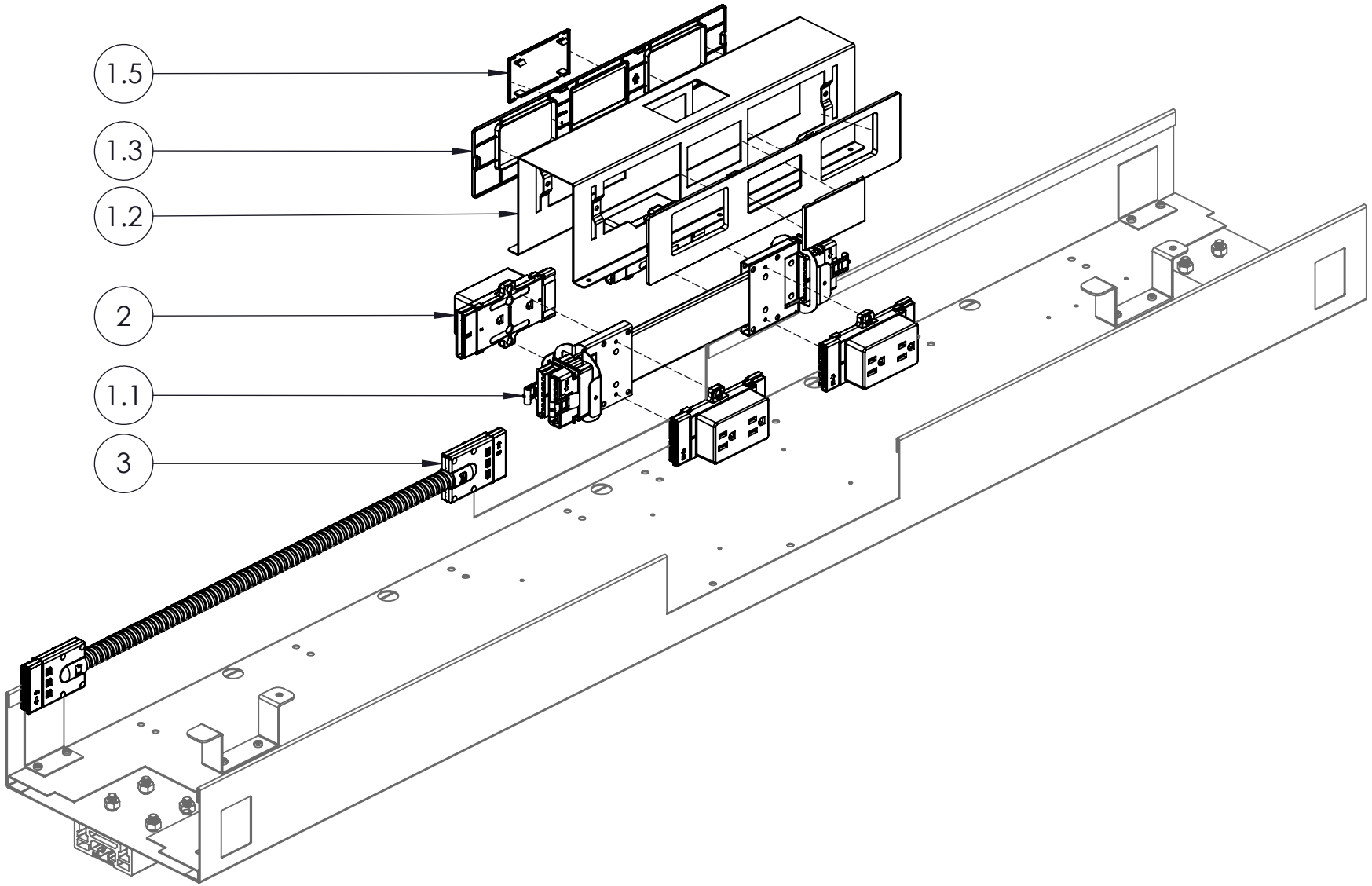

Part & Product Identification

ITEM NO.	PREVIEW	DESCRIPTION	PART NUMBER	QTY.
1. NAVIGATE POWER MODULE (HNBEPM)				
1.1	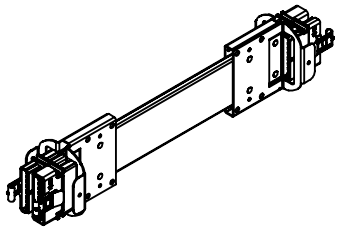	PLUG OUTLET ASSY	$OUTLET MODULE	1
1.2	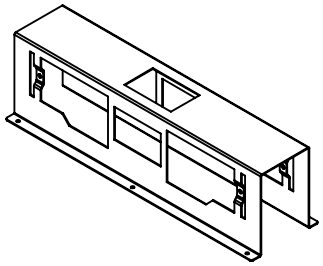	OUTLET MODULE HOUSING NAVIGATE WIRE CHANNEL	MPA16-E019	1
1.3	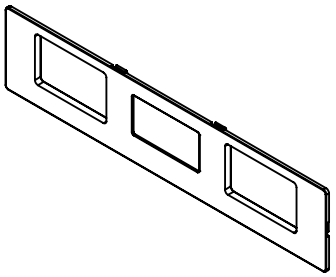	POWER MODULE FINISHING PLATE	B02-79011	2
1.4	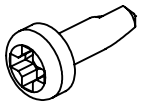	#8-18X1/2"CROSS SQUARE COMB.SELF	E07-0012	6
1.5	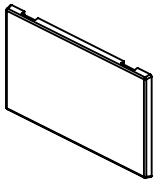	COMMUNICATION BLANK COVER PLATE	B02-0104	2
1.6	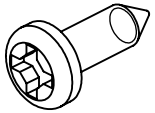	SCREW, TAPPING, #8 X 1/2", QUADREX, PAN, A	E01-0015	12
2	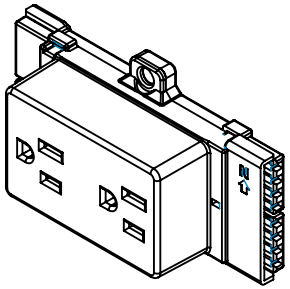	NAVITAGE RECEPTACLE OUTLET	HNBERO	4
3	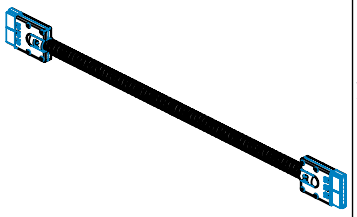	NAVIGATE POWER HARNESS	HNBEPH	1

ASSEMBLE OUTLET HOUSING

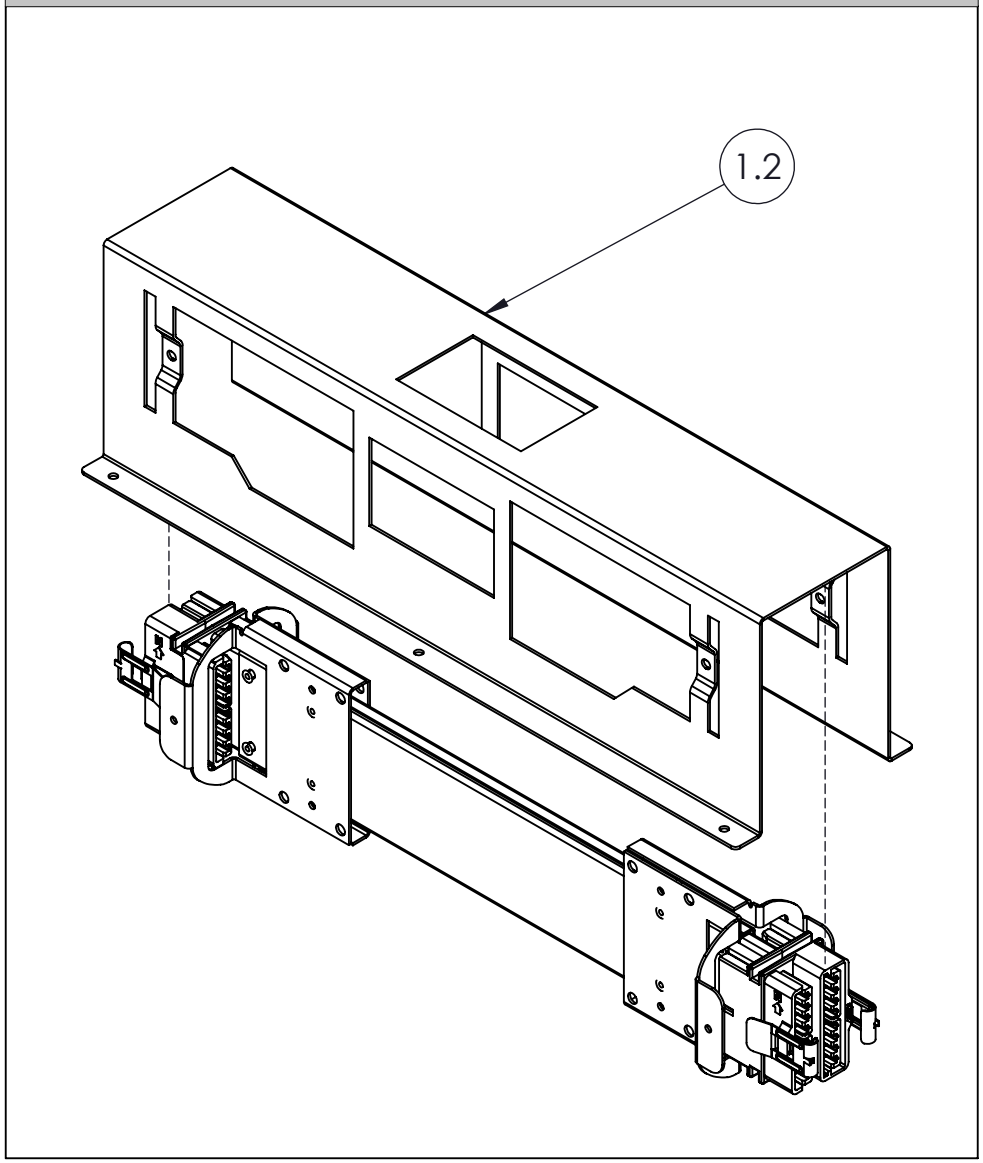

STEP 1: Place Outlet Housing over Power Module.

FASTEN SCREWS

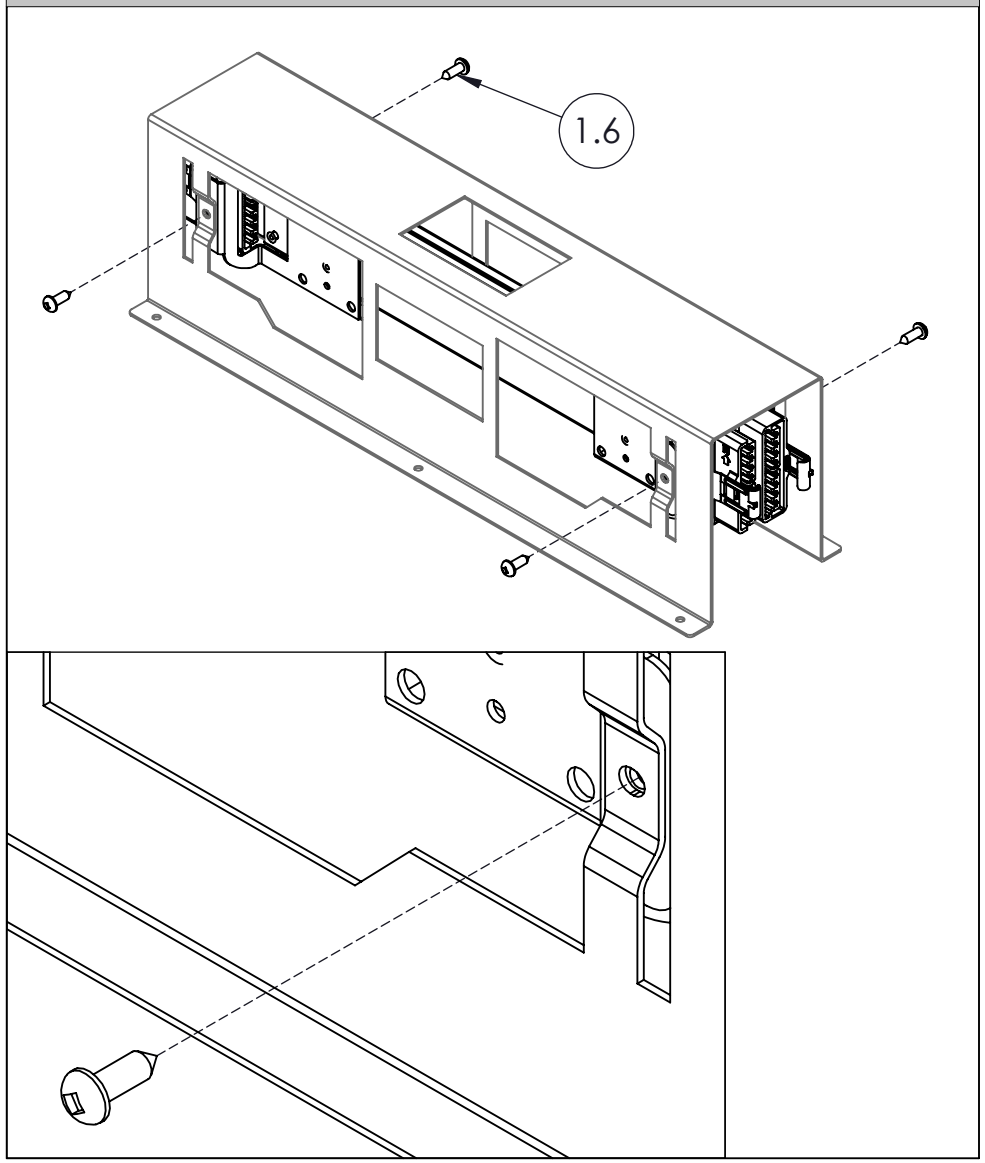

STEP 2: Fasten Outlet Housing with screws provided.

ASSEMBLE RECEPTACLE

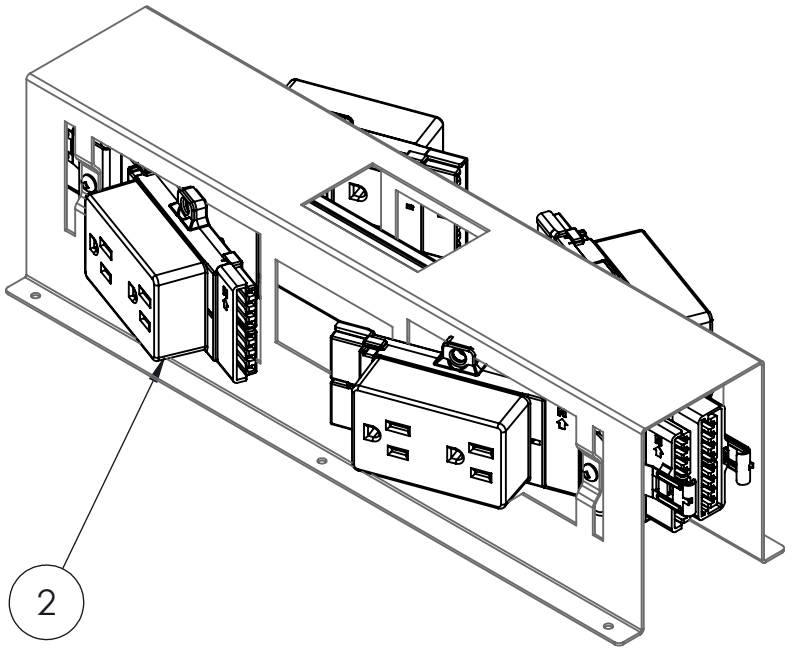

STEP 3: Slide and engage Receptacles into Outlet Housing

FASTEN SCREWS

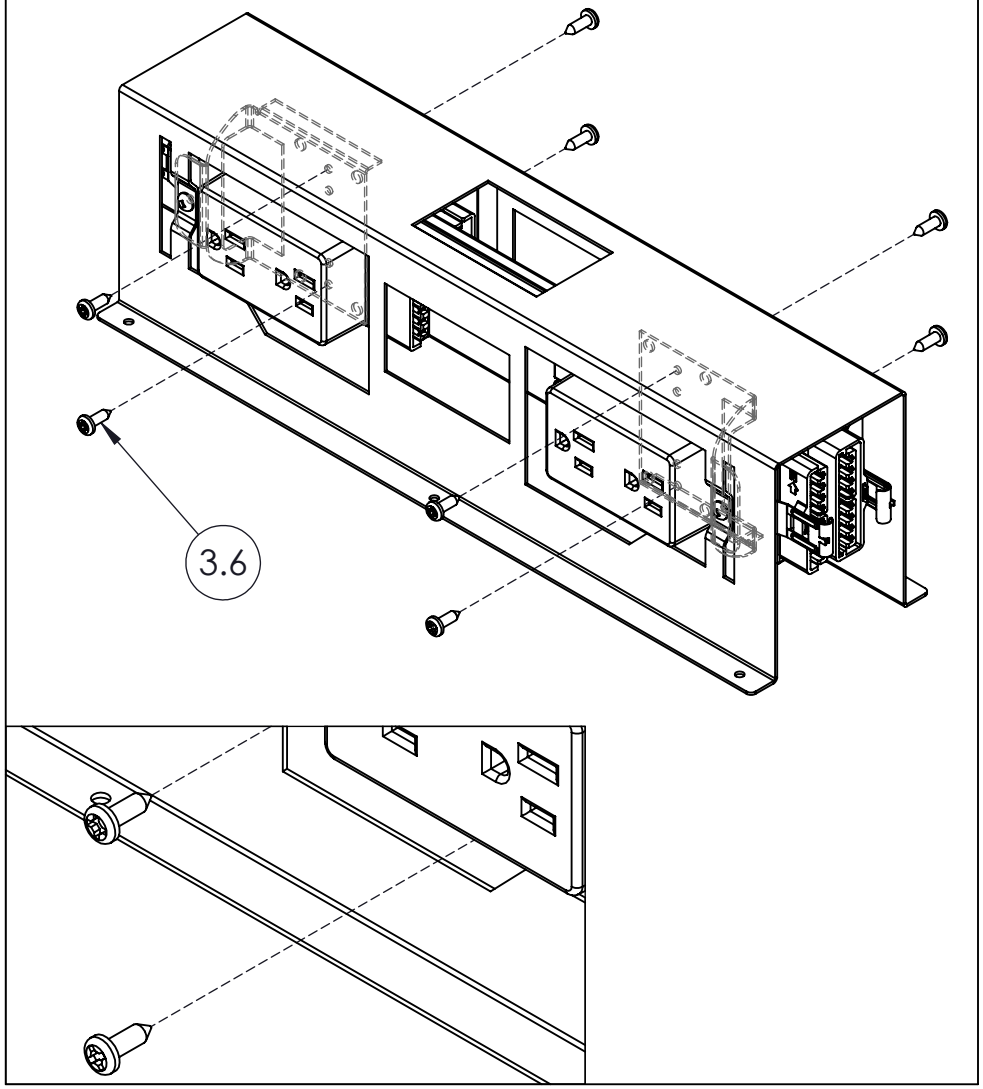

STEP 4: Fasten Receptacles with screws provided.

ASSEMBLE PLATES

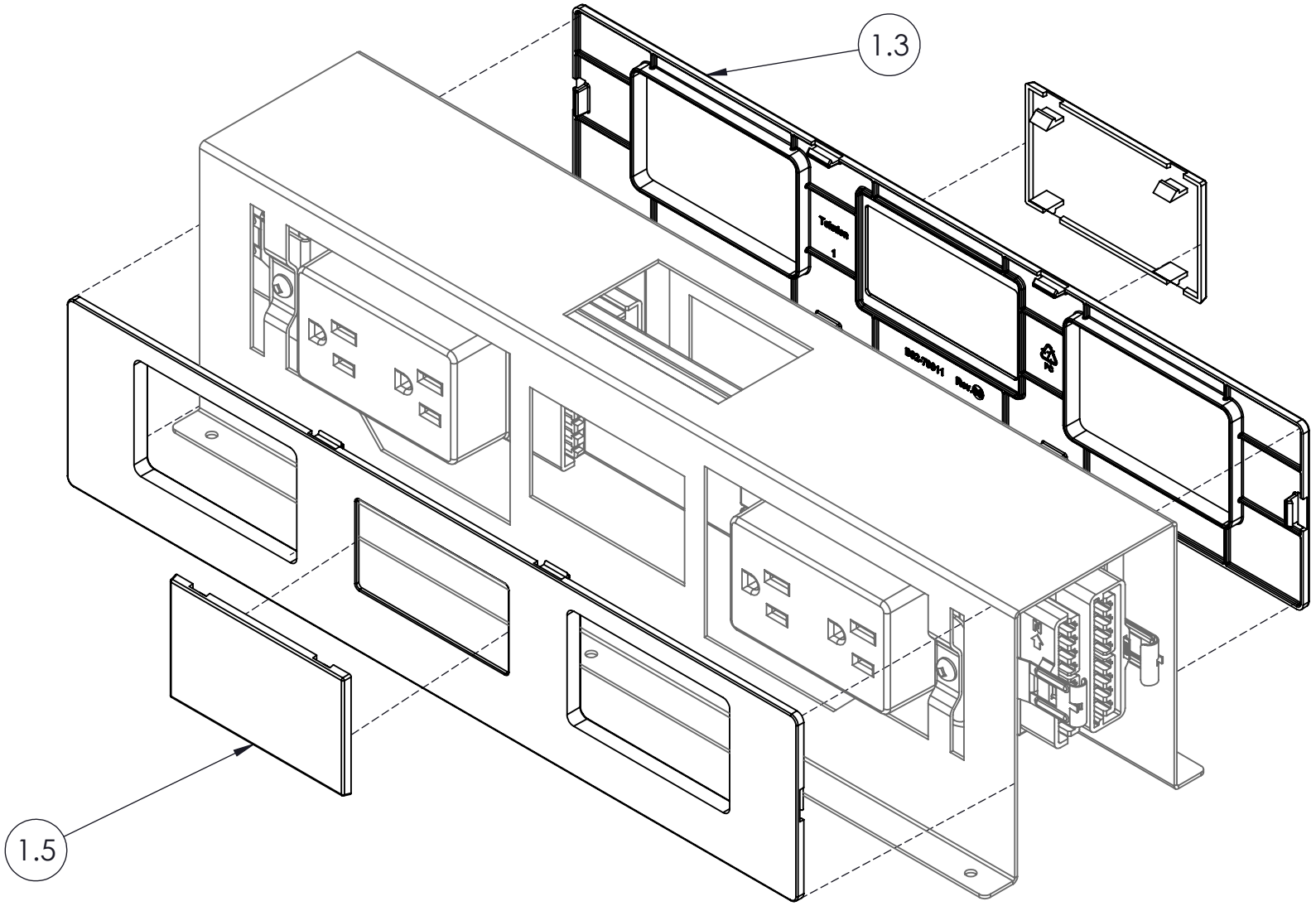

STEP 5: Attach the Bezel by snapping it onto the Housing. Then, attach Blank Plate onto the Bezel.

POWER MODULE ASSEMBLY - 1

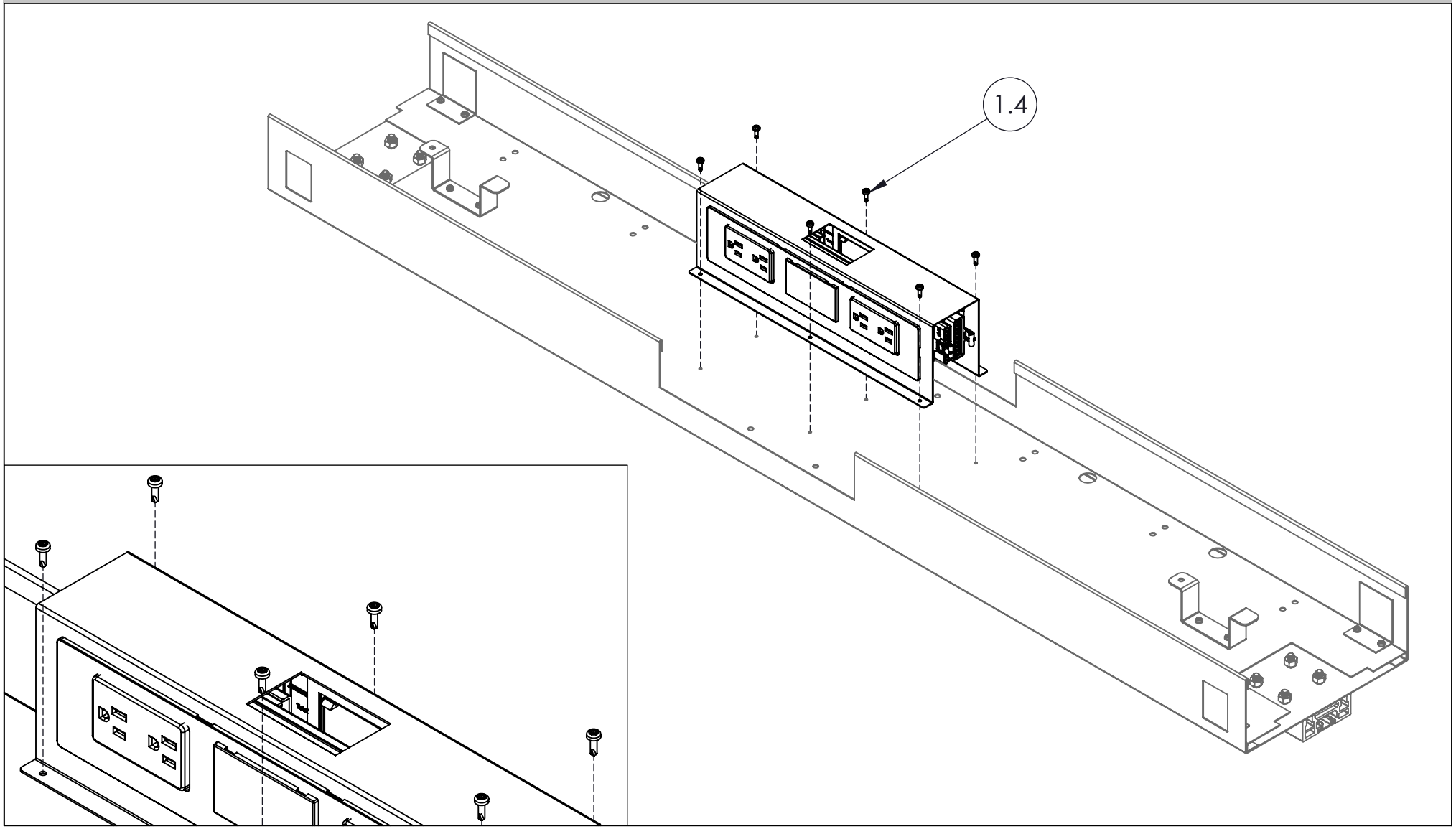

STEP 6: Fasten Power Module assembly to underside of Cable Tray, make sure to line up holes of Cable Tray to holes from Brackets.

POWER MODULE ASSEMBLY - 2

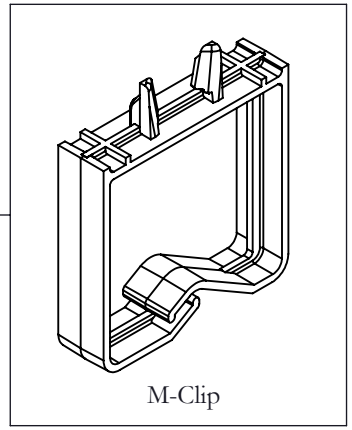

M-Clip

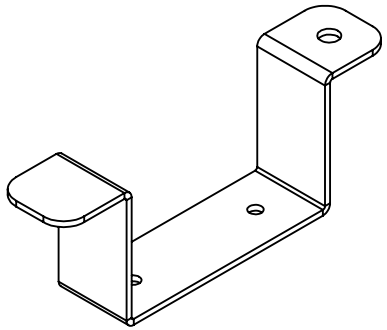

Hanger-Club Talk Bracket

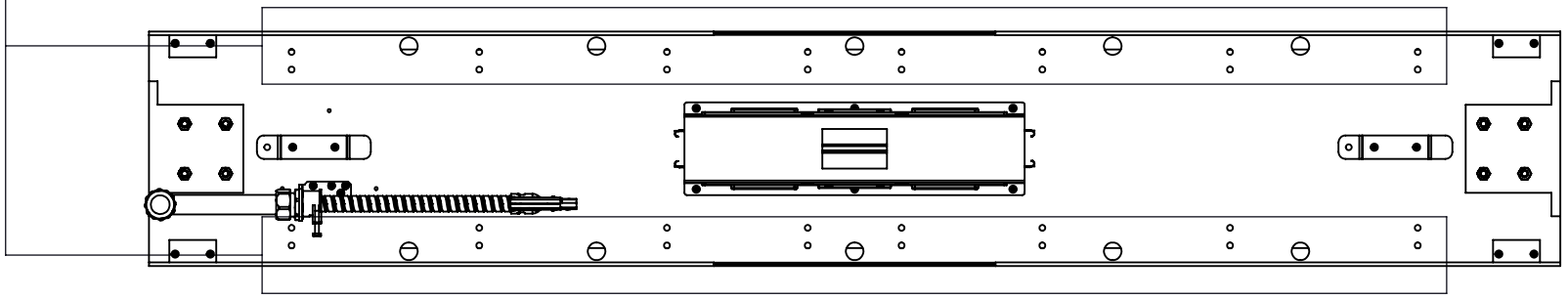

NOTE: Installer is to determine the layout for Hanger-Club Talk Bracket and M-Clip within the rectangular area.

STEP 7: Assemble M-Clips and Hanger-Club Talk Brackets.

POWER HARNESS ASSEMBLY

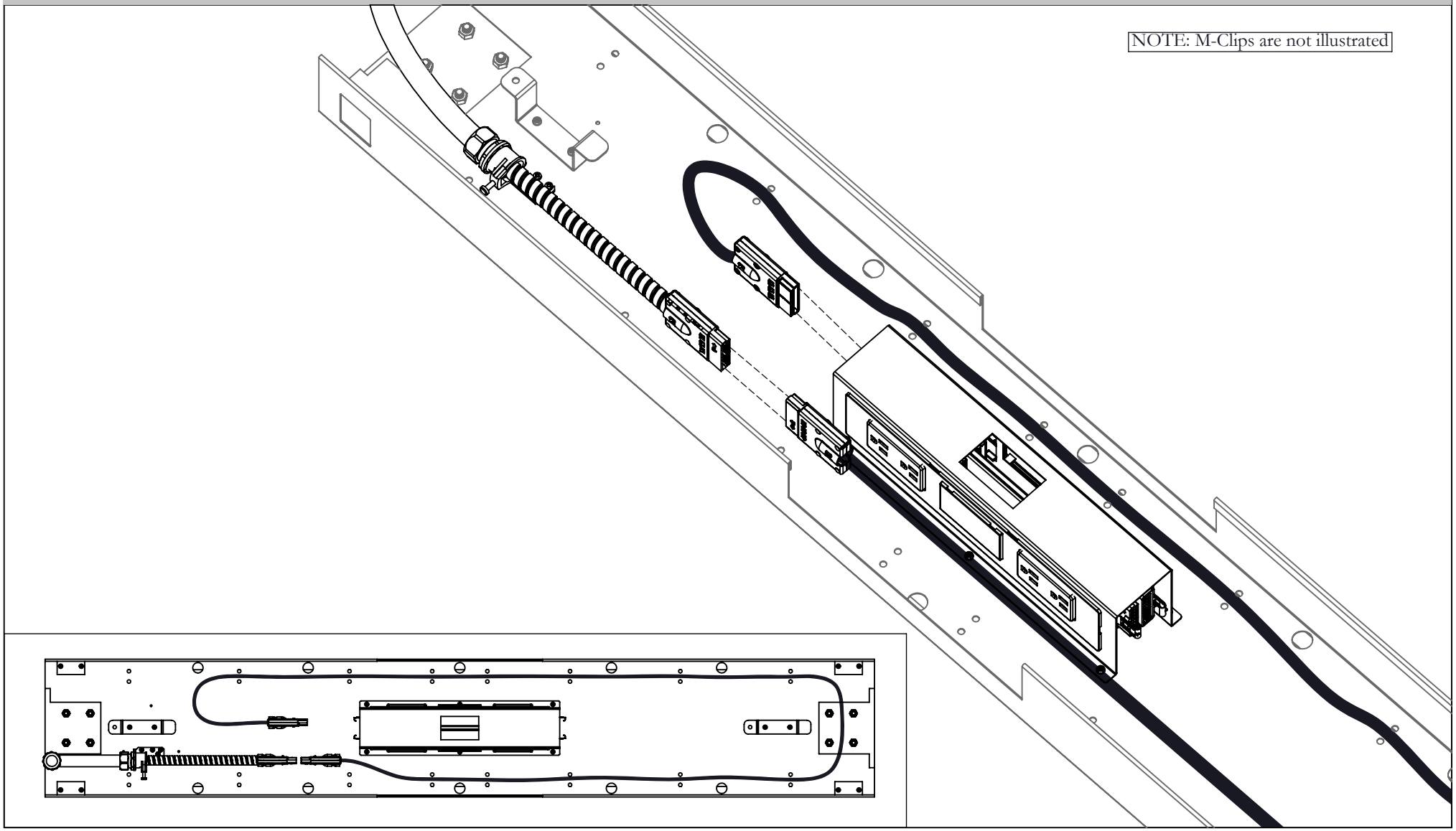

STEP 8: Connect pre-assembled Base Feed to Power Module. If Power Harness is specified, connect Power Harness to Power Module.

Navigate Chicago Power Module (HNBEPMCH), Navigate Single-Sided Chicago Power Module (HNBEPSCH)

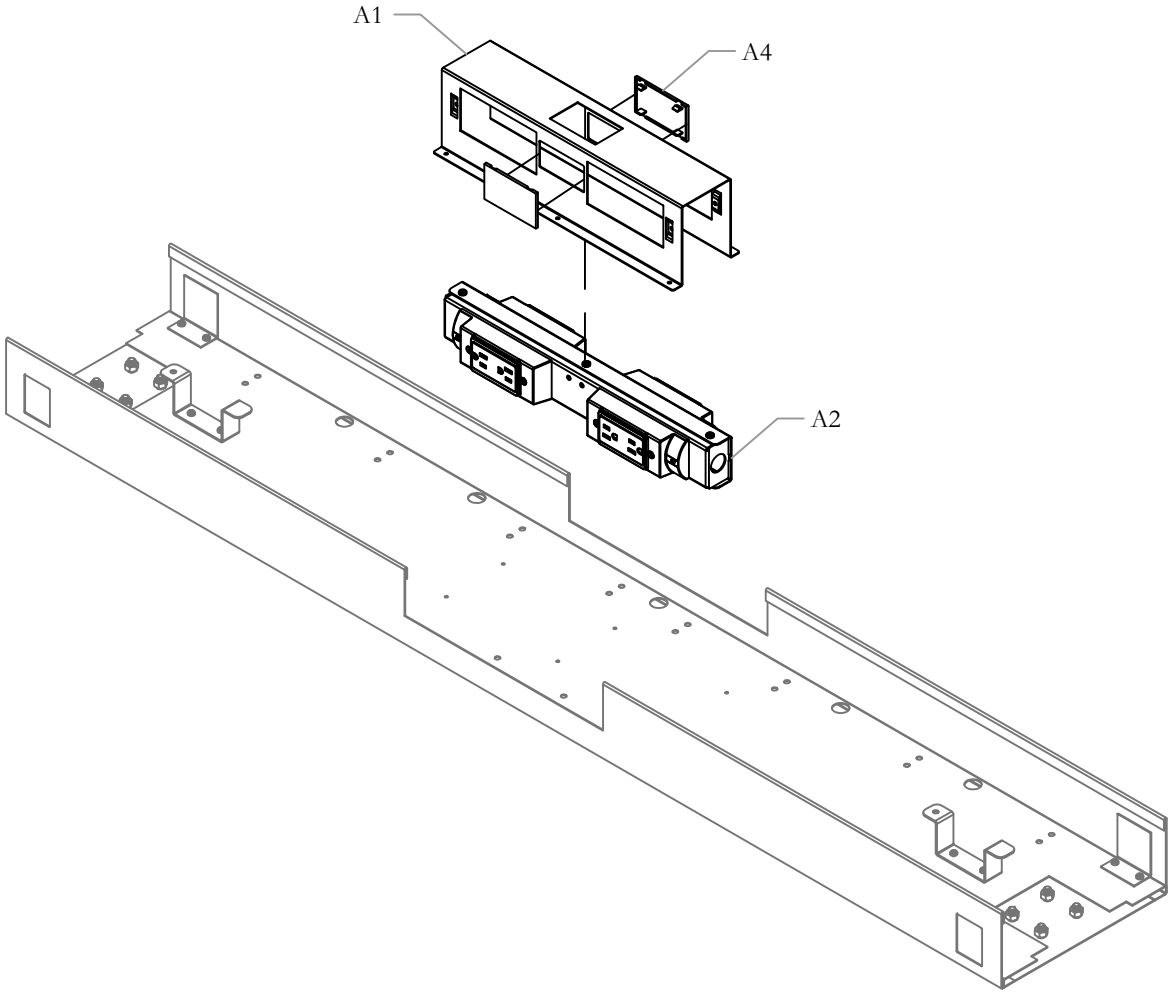

NOTE: Single-Sided Power Module follows same step.

Part and Product Identification

A - Chicago Power Module (HNBEPMCH) x1

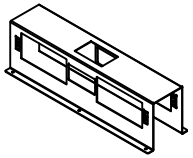

A1 - Sheet Metal Housing, Chicago Outlet Box, Navigate Hab (MPA16-E020) x1

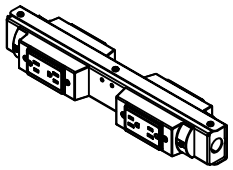

A2 - Inner Housing Assembly (JNEPCB) x1



A3 - Screw,#8x1/2" RND, ROB, Bright Zinc (FS8x1-2-RRB) x10

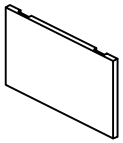

A4 - Communication Blank Plate (PB02-0104) xvaries (2 or 4)

WARNING!
Installers must not perform any electrical work while power is on. Care should be taken to test and confirm power is off prior to beginning any assembly and/or disassembly.
Do not connect to power source until installation is complete. Connection to the building power source must be performed by a licensed electrician.
Failure to follow these instructions poses significant risk of electrical shock, injury and damage.
Only licensed electricians are authorized to make electrical connections in accordance with applicable codes and regulations.
For Teknion Base Feed harnesses, any replacement of the fitting on the hardwired end of the liquidtight whip must be done by a licensed electrician using only fittings approved for the type of liquidtight conduit used on the base feed harness.
Failure to exactly follow these instructions renders Teknion's warranty and safety certifications null and void.

LOOSEN SCREWS

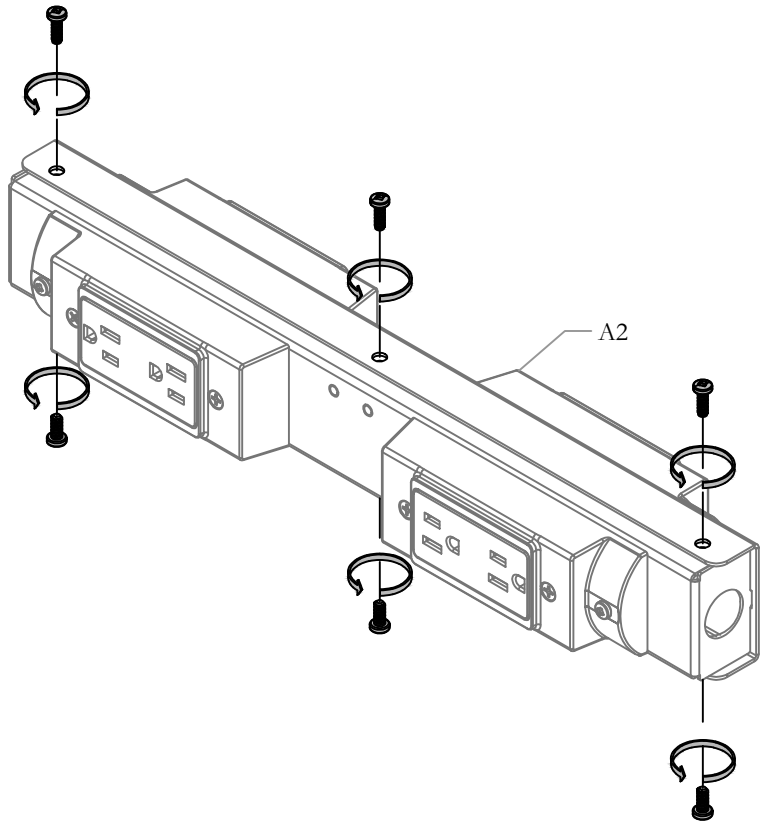

STEP 1: Remove Screws from the Inner Housing Assembly (A2) to loosen.

DISASSEMBLE INNER HOUSING

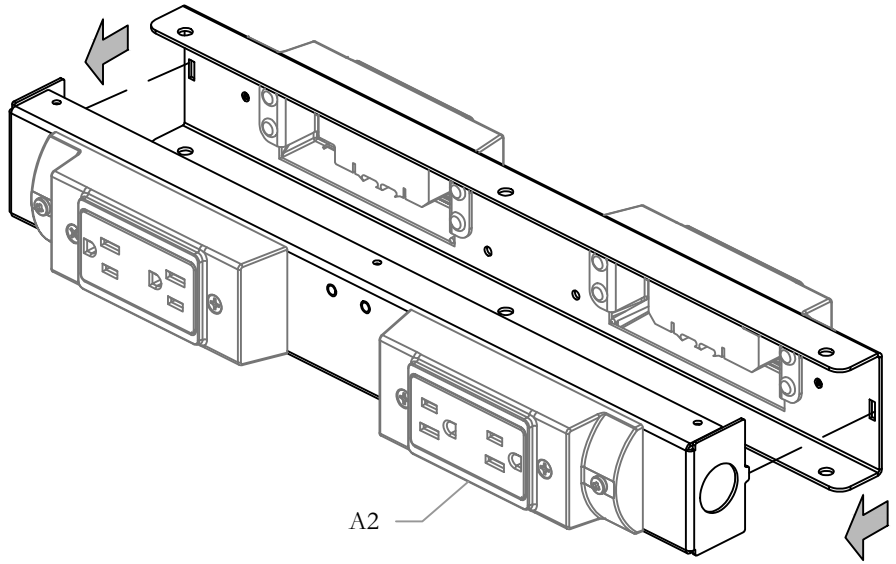

STEP 2: Disassemble Inner Housing Assembly as shown.

WARNING! *Do not connect to power source until installation is complete. *Connection to the building power source must be performed by a licensed electrician.*Not following these instruction could result in damage and/or injury. *It is recommended that electrical connections be made under the supervision of a licensed electrician in accordance with applicable codes and regulations.

MAKE WIRE CONNECTIONS

NOTE: Licensed Electrician need to make the Wire Connections before attaching the Inner Housing to Metal Housing.

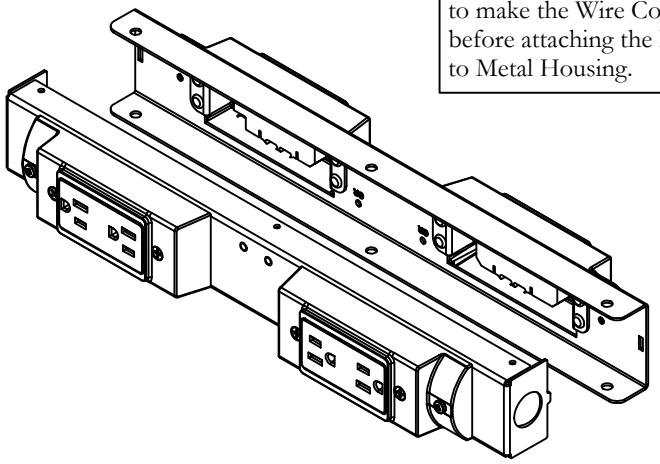

NOTE: The Wires are hidden for illustration purpose.

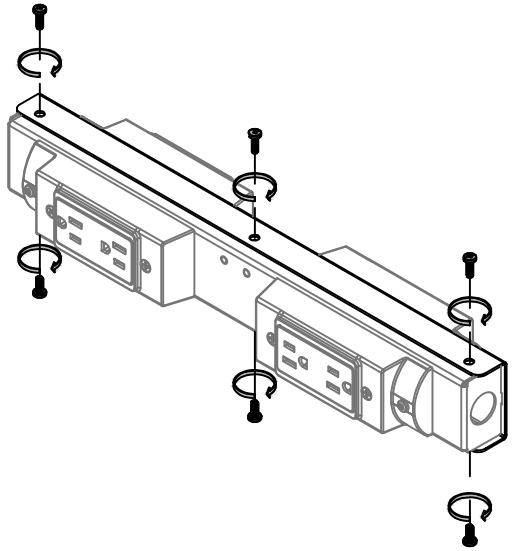

STEP 3: Make the Wire Connections and attach the Inner Housing.

FASTEN SCREWS

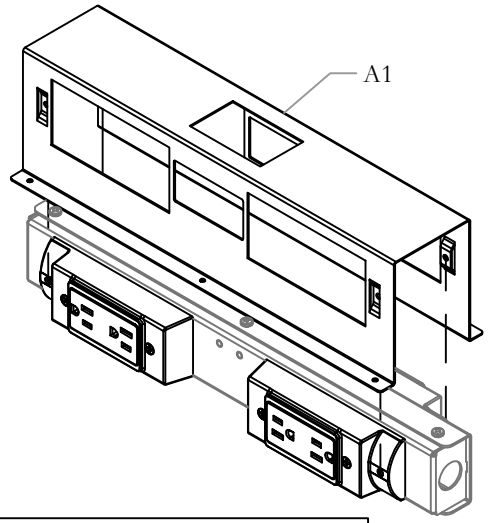

NOTE: The Wires are hidden for illustration purpose.

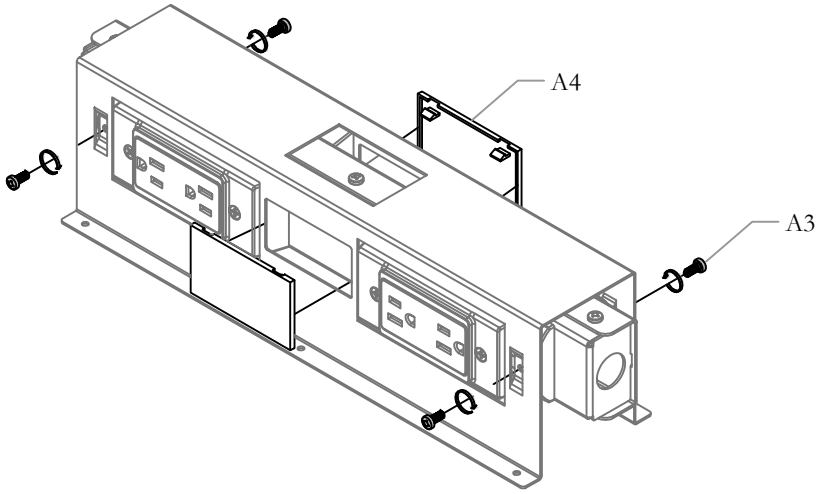

STEP 4: Place Outer Metal Housing (A1) as shown above.
Fasten with Screws (A3) provided. Then, place the Blank Plate (A4) as shown.

WARNING! *Do not connect to power source until installation is complete. *Connection to the building power source must be performed by a licensed electrician.*Not following these instruction could result in damage and/or injury. *It is recommended that electrical connections be made under the supervision of a licensed electrician in accordance with applicable codes and regulations.

ATTACH CHICAGO POWER MODULE TO WIRE CHANNEL

NOTE: Base feed is pre-assembled.

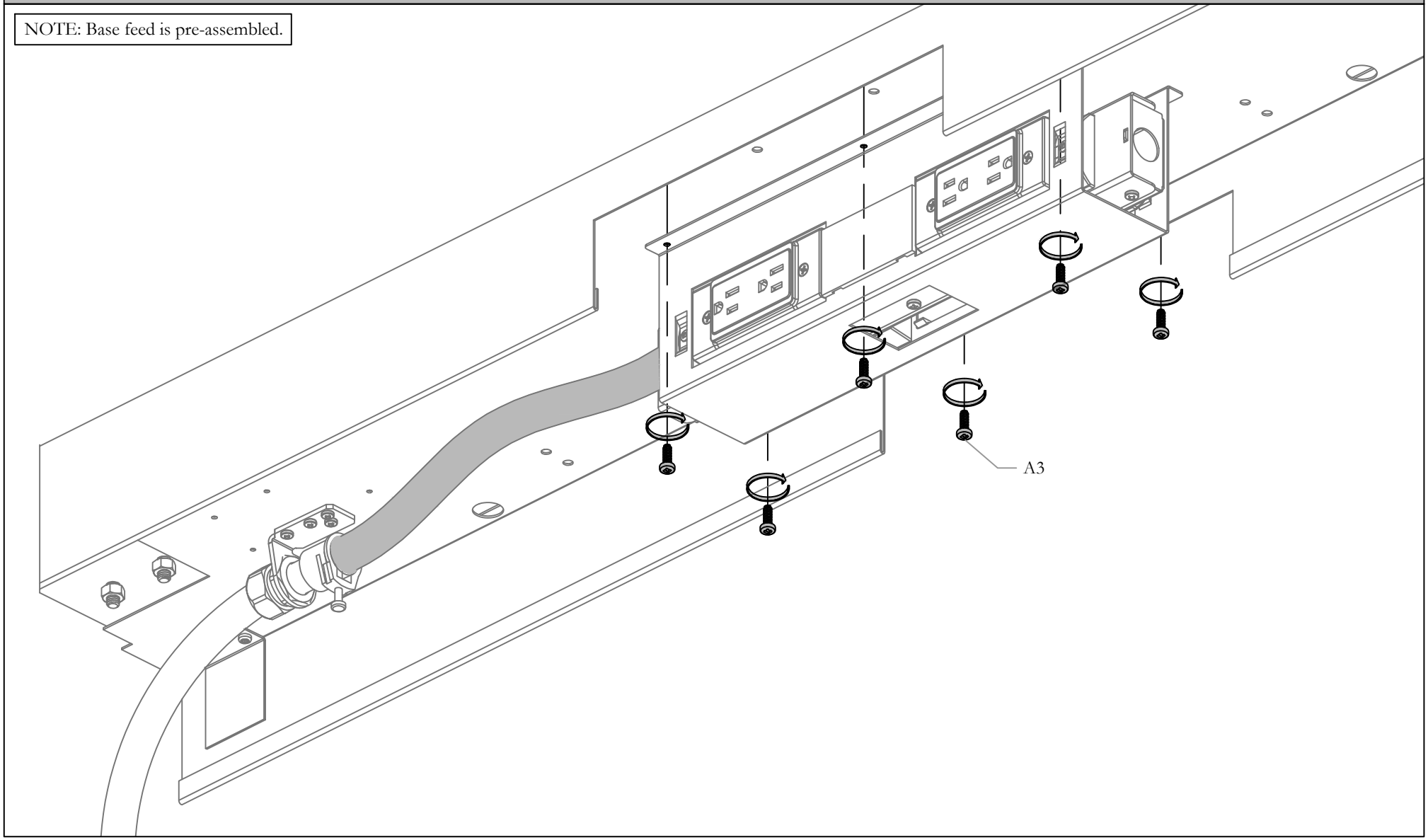

STEP 5: Fasten Chicago Power Module assembly to underside of Cable Tray with Screws (A3). Make sure to lineup holes of cable tray to bracket holes.

WARNING! *Do not connect to power source until installation is complete. *Connection to the building power source must be performed by a licensed electrician.*Not following these instruction could result in damage and/or injury. *It is recommended that electrical connections be made under the supervision of a licensed electrician in accordance with applicable codes and regulations.

POWER MODULE ASSEMBLY - 1

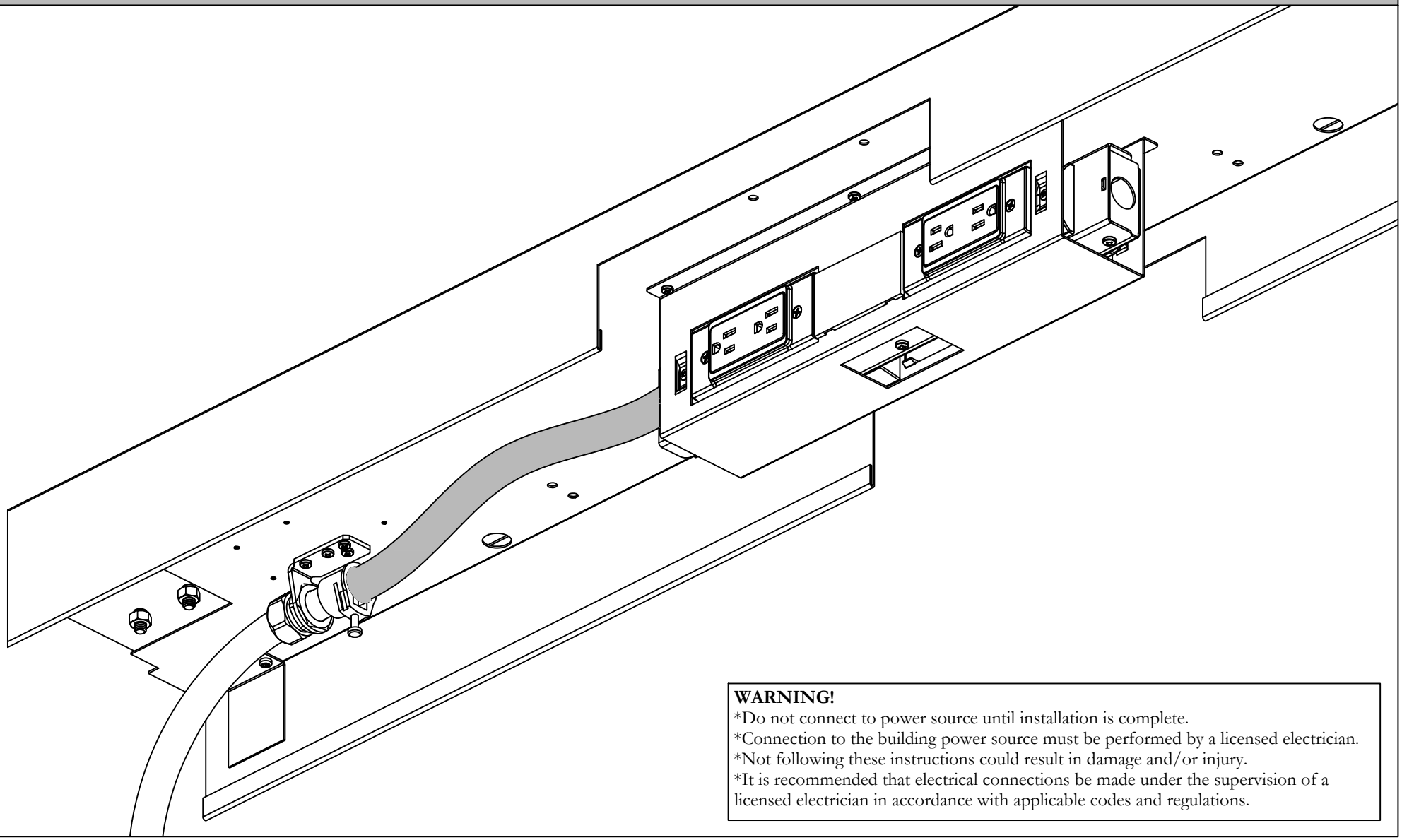

WARNING!
*Do not connect to power source until installation is complete.
*Connection to the building power source must be performed by a licensed electrician.
*Not following these instructions could result in damage and/or injury.
*It is recommended that electrical connections be made under the supervision of a licensed electrician in accordance with applicable codes and regulations.

STEP 6: Fasten Power Module assembly to underside of Cable Tray, make sure to line up holes of Cable Tray to holes from Brackets.

WARNING! *Do not connect to power source until installation is complete. *Connection to the building power source must be performed by a licensed electrician.*Not following these instruction could result in damage and/or injury. *It is recommended that electrical connections be made under the supervision of a licensed electrician in accordance with applicable codes and regulations.

POWER MODULE ASSEMBLY - 2

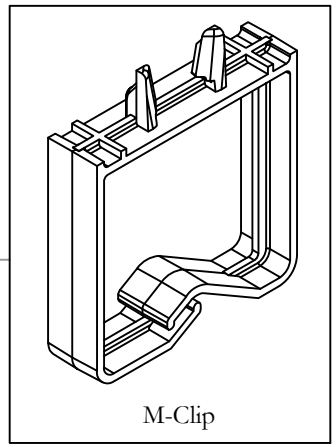

M-Clip

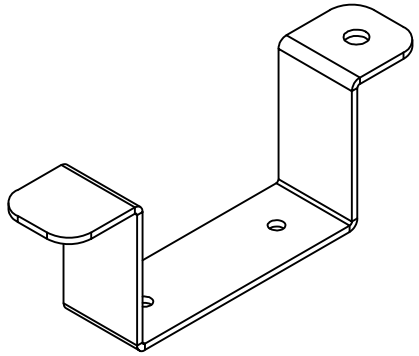

Hanger-Club Talk Bracket

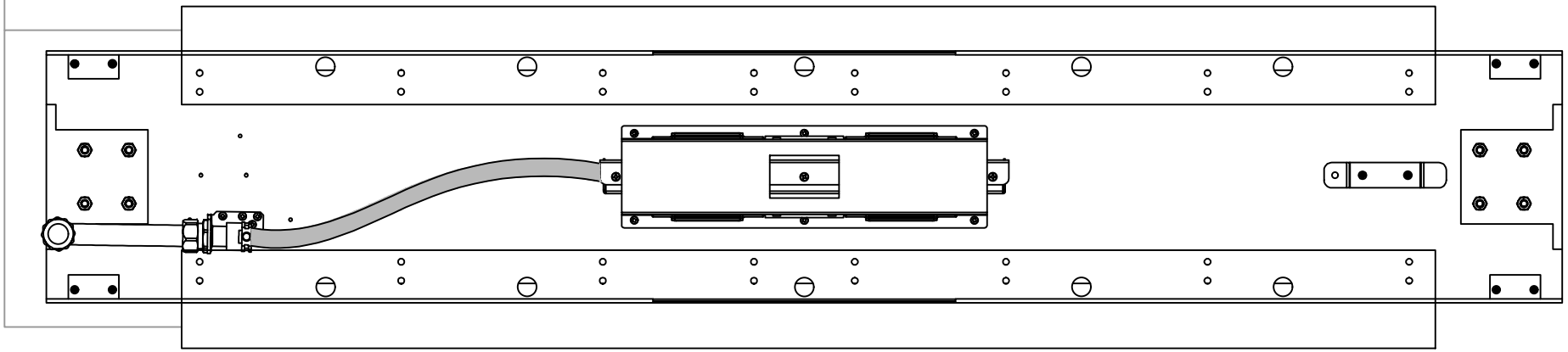

NOTE: Installer is to determine the layout for Hanger-Club Talk Bracket and M-Clip within the rectangular area.

STEP 7: Assemble M-Clips and Hanger-Club Talk Brackets.

WARNING! *Do not connect to power source until installation is complete. *Connection to the building power source must be performed by a licensed electrician.*Not following these instruction could result in damage and/or injury. *It is recommended that electrical connections be made under the supervision of a licensed electrician in accordance with applicable codes and regulations.

Navigate Base Feed (HNBEBF), Base Feed Cover (HNBEBC), Chicago Base Feed (HNBEBFCH), Split Base Feed (HNBEBFS

NOTE: Navigate Height Adjustable Base is shown for reference.

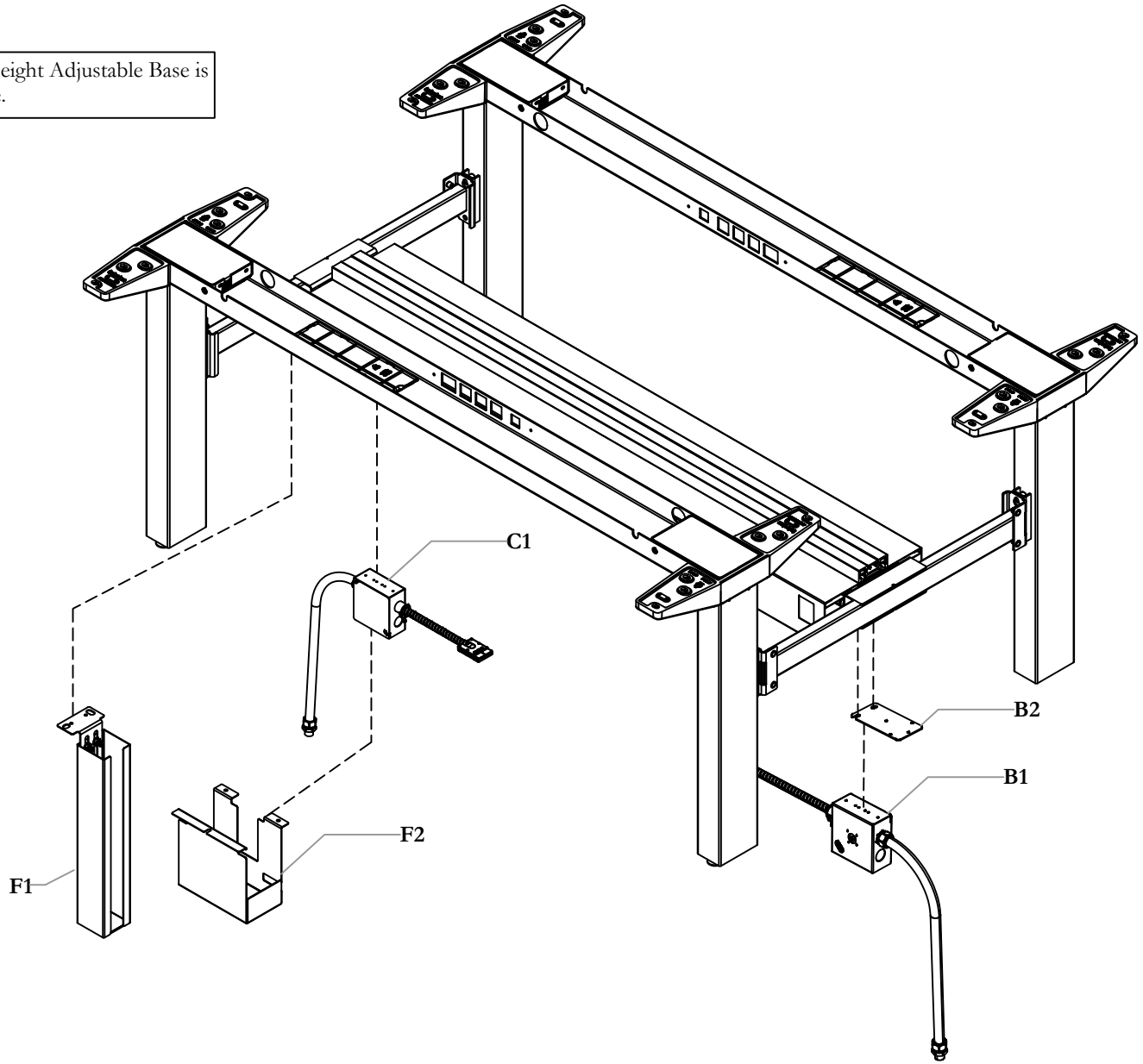

Part and Product Identification

A - Base Feed - End Condition (HNBEBF_E) x1

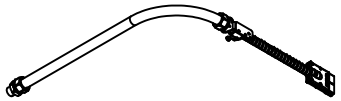

A1 - Base Feed w/ Bracket (HNBEBF-END) x1



A2 - #8x $\frac{1}{2}$ RND ROB Screw (FS8 x 1-2 -RRB) x4

OR

B - Base Feed - Mid Condition (HNBEBF_M) x1

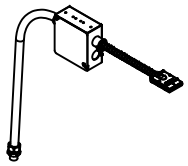

B1 - Base Feed - Mid Condition (HNBEBF-MID) x 1

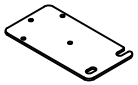

B2 - Universal Base Feed Mounting Plate (MPA16-E081) x1



B3 - Machine Screw Pan Head Cross (FS1-4-20x5-8RPM) x2



B4 - #10-16 x $\frac{7}{16}$ Pan Head Screw (FS10-16x7-16QRB) x2

OR

C - Split Base Feed W/ Bracket - (HNBEBFS_End) x1

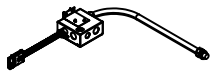

C1 - Base Feed w/ Bracket (HNBEBFS-END) x1



C2 - #8x $\frac{1}{2}$ RND ROB Screw (FS8 x 1-2 -RRB) x2

OR

D - Chicago Base Feed - End Condition (HNBEBFCH_E) x1



D1 - Chicago Base Feed w/ Bracket (HNBEBF-END) x1



D2 - #8x $\frac{1}{2}$ RND ROB Screw (FS8 x 1-2 -RRB) x2

OR

E - Chicago Base Feed (HNBEBFCH_M) x1

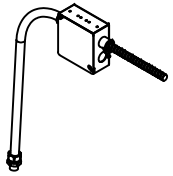

E1 - Chicago Base Feed - Mid Condition (HNBEBFCH-MID) x1

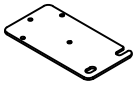

E2 - Universal Base Feed Mounting Plate (MPA16-E081) x1



E3 - Machine Screw Pan Head Cross (FS1-4-20x5-8RPM) x4



E4 - #10-16 x $\frac{7}{16}$ Pan Head Screw (FS10-16x7-16QRB) x2

OR

F - Base Feed Cover - (HNBEBC) x1

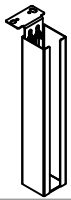

F1 - Base Feed Cover Assembly - (MPN09-E135) x 1

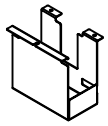

F2 - Cover - Base Feed Box (MPA15-E779) x 1

F3 - Hardware Kit for Base Cover (X01-4284) x1



F3A -#8x $\frac{1}{2}$ Tek Screw (FS8 x 1-2 -RRB) x5

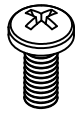

F3B - $\frac{1}{4}$-20x $\frac{5}{8}$ " Machine Screw, Quad Truss (E01-0098) x 2

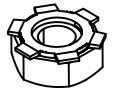

F3C- HN_$\frac{1}{4}$-20_ST_ZN_KEP*RR (E03-0059) x 2

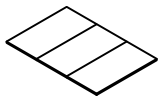

F3D - Cork Cushion Pad (PFCORK-PS125) x 2

INSTALL SPLIT BASE FEED

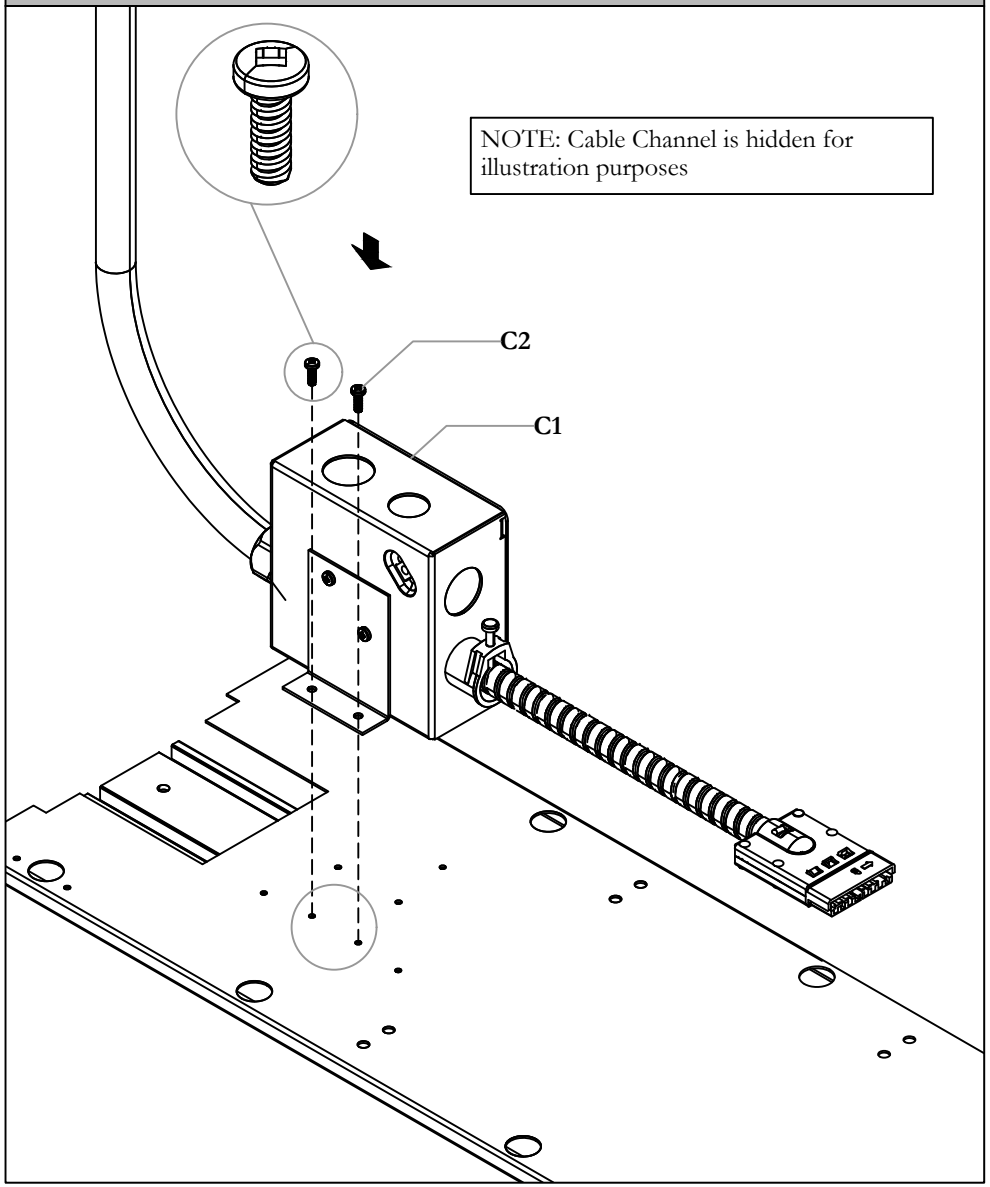

STEP 1a: Align the Split Base Feed Bracket with Pilot Holes and Fasten it as shown

INSTALL BOX COVER (OPTIONAL)

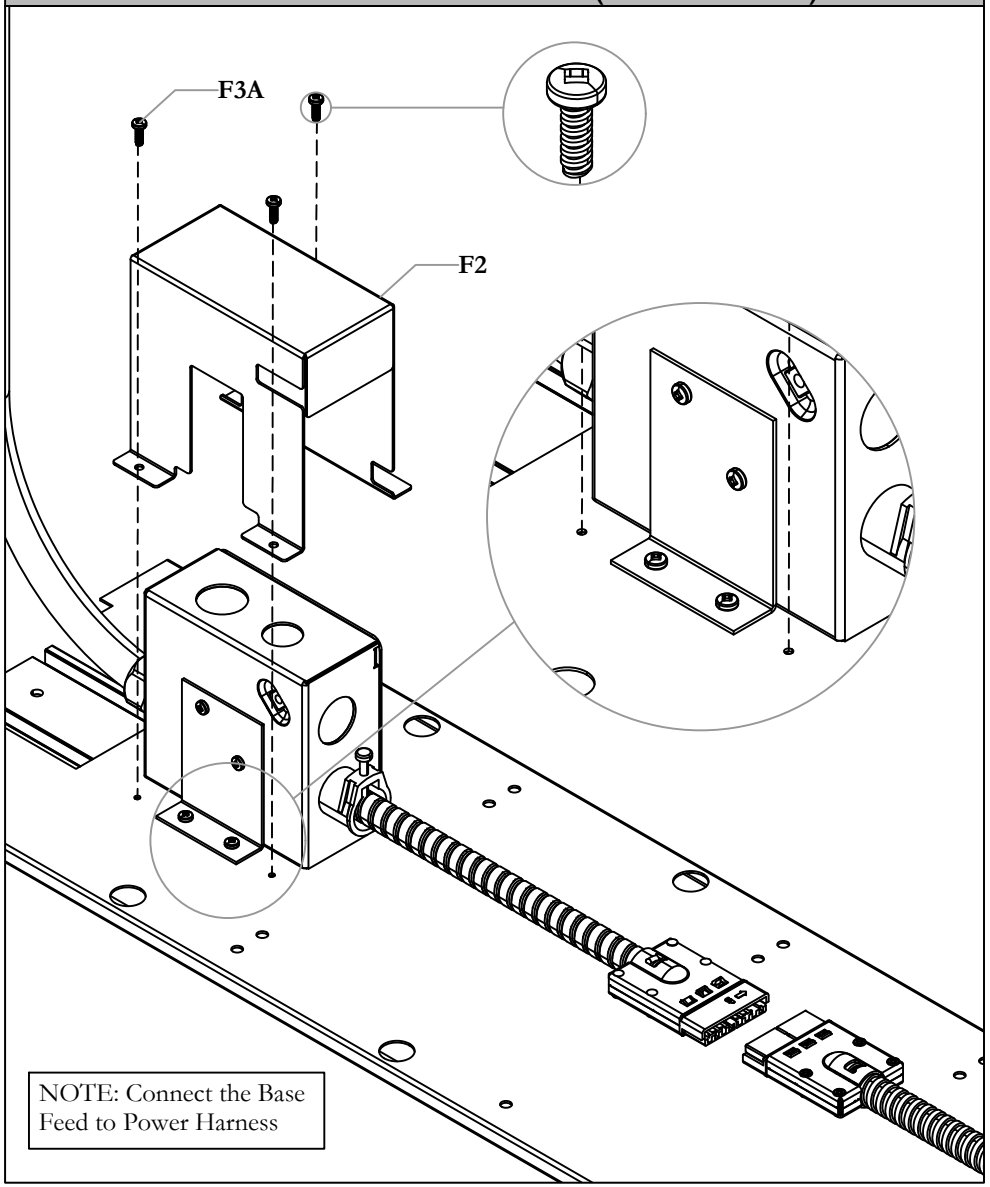

STEP 1b: Install Box Cover. Connect the Base Feed to the Power Harness (24").

INSTALL BASE FEED

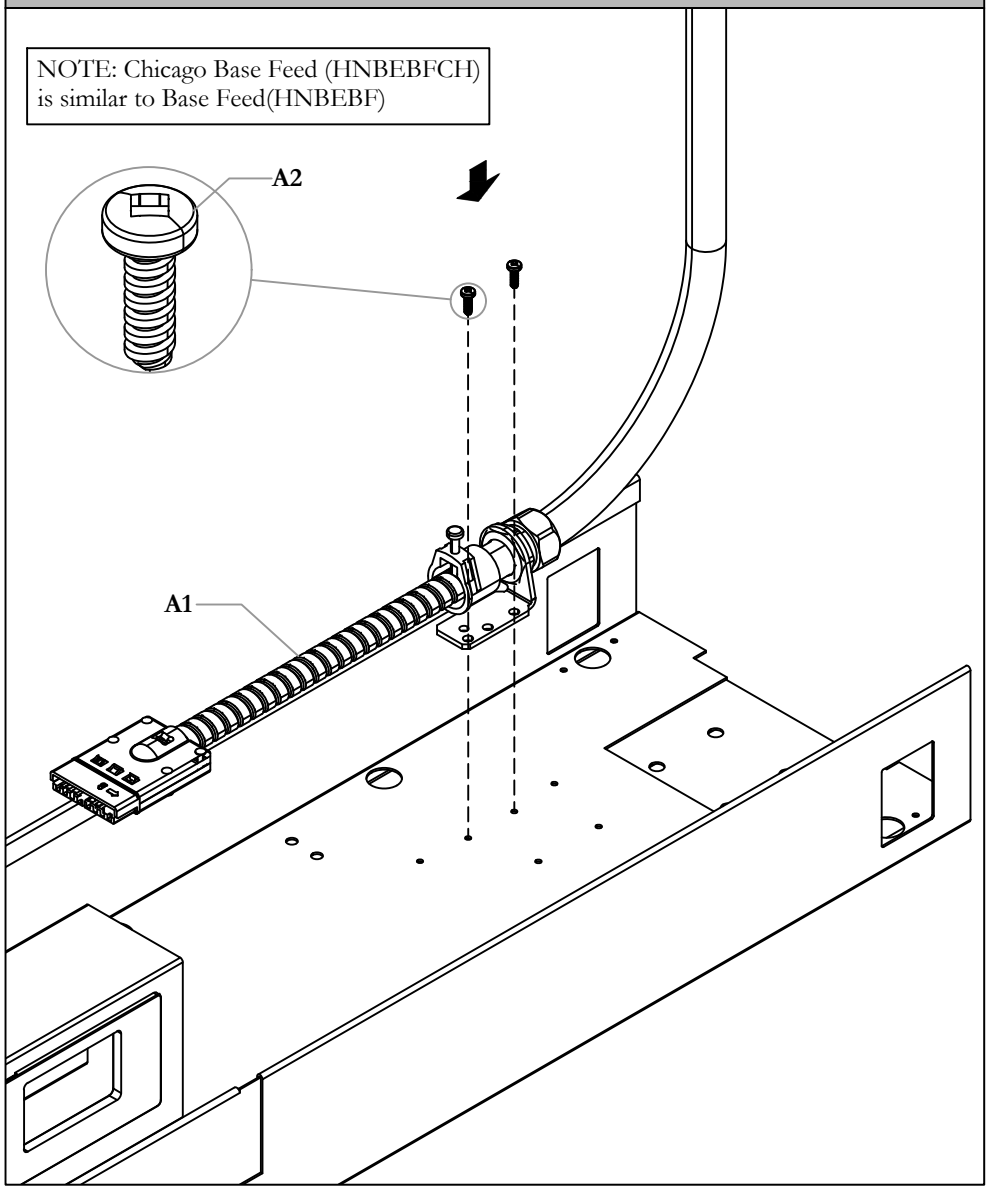

STEP 2 : Install base feed. If Required, 2x #8 Self Drilling Screws can be used

ATTACH BASE FEED & INSTALL CABLE TRAY

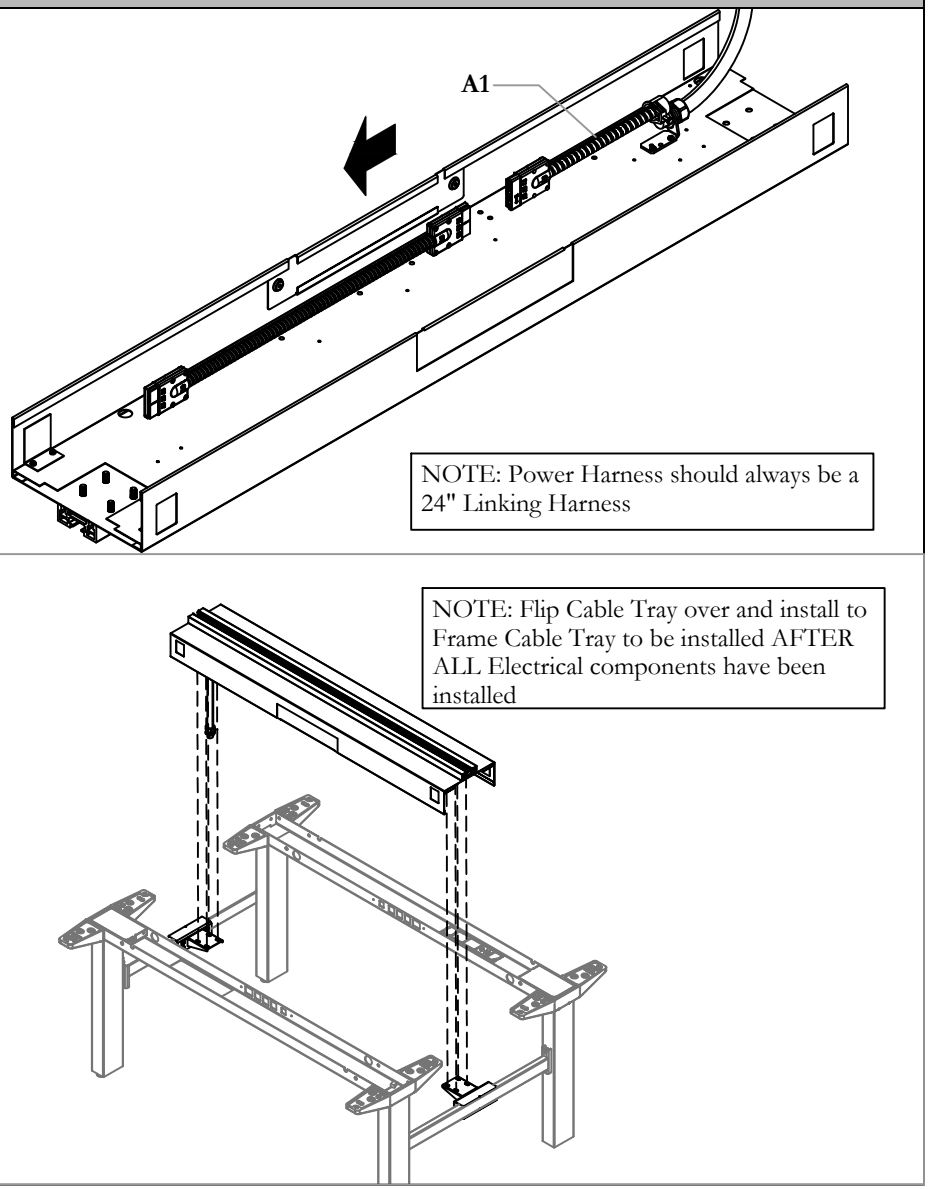

STEP 3: Install Base Feed onto the Power Harness as shown other end of the Power Harness to the Power Module. Install Cable Tray to the Frame after installing ALL ELECTRICS on to the Wire Channel

INSTALL BASE FEED COVER

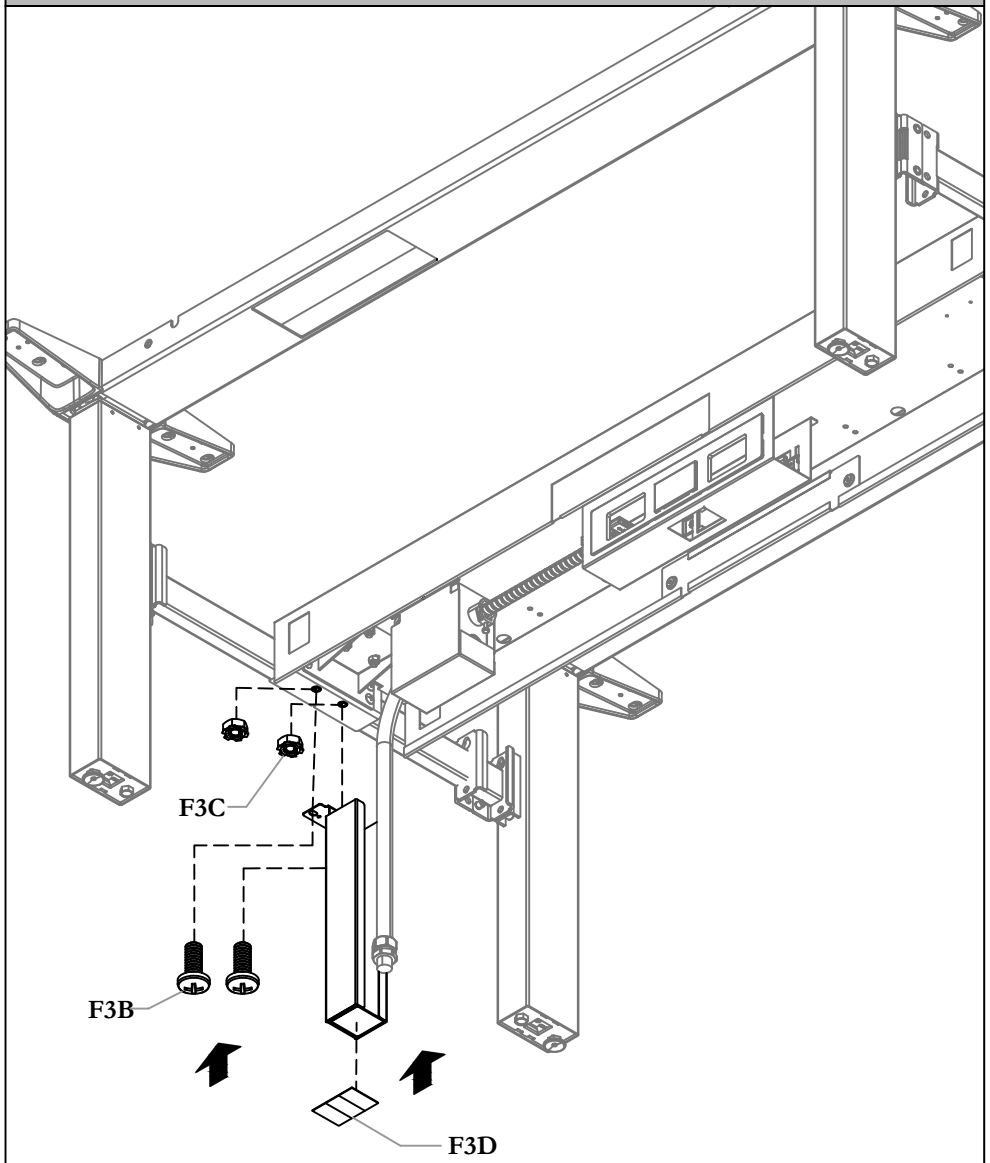

STEP 4: Fasten Bracket to underside of Stretch bar using hardware kit for HAB Base Feed (X01-4284). Attach Cork Cushion pad to base feed cover.

LOOSEN SCREW

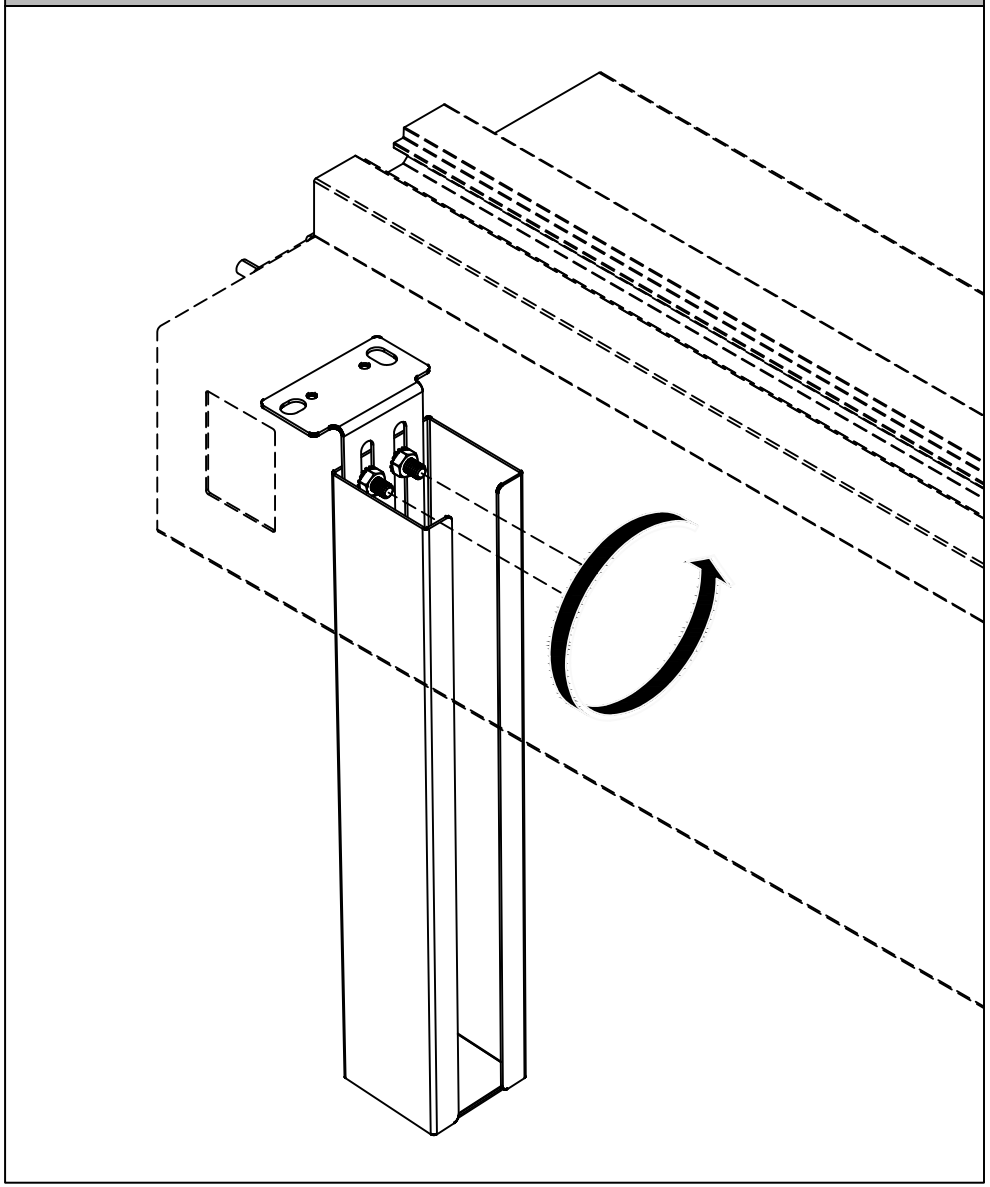

STEP 5: Loosen screw to adjust the height of the cover bracket.

ADJUST COVER

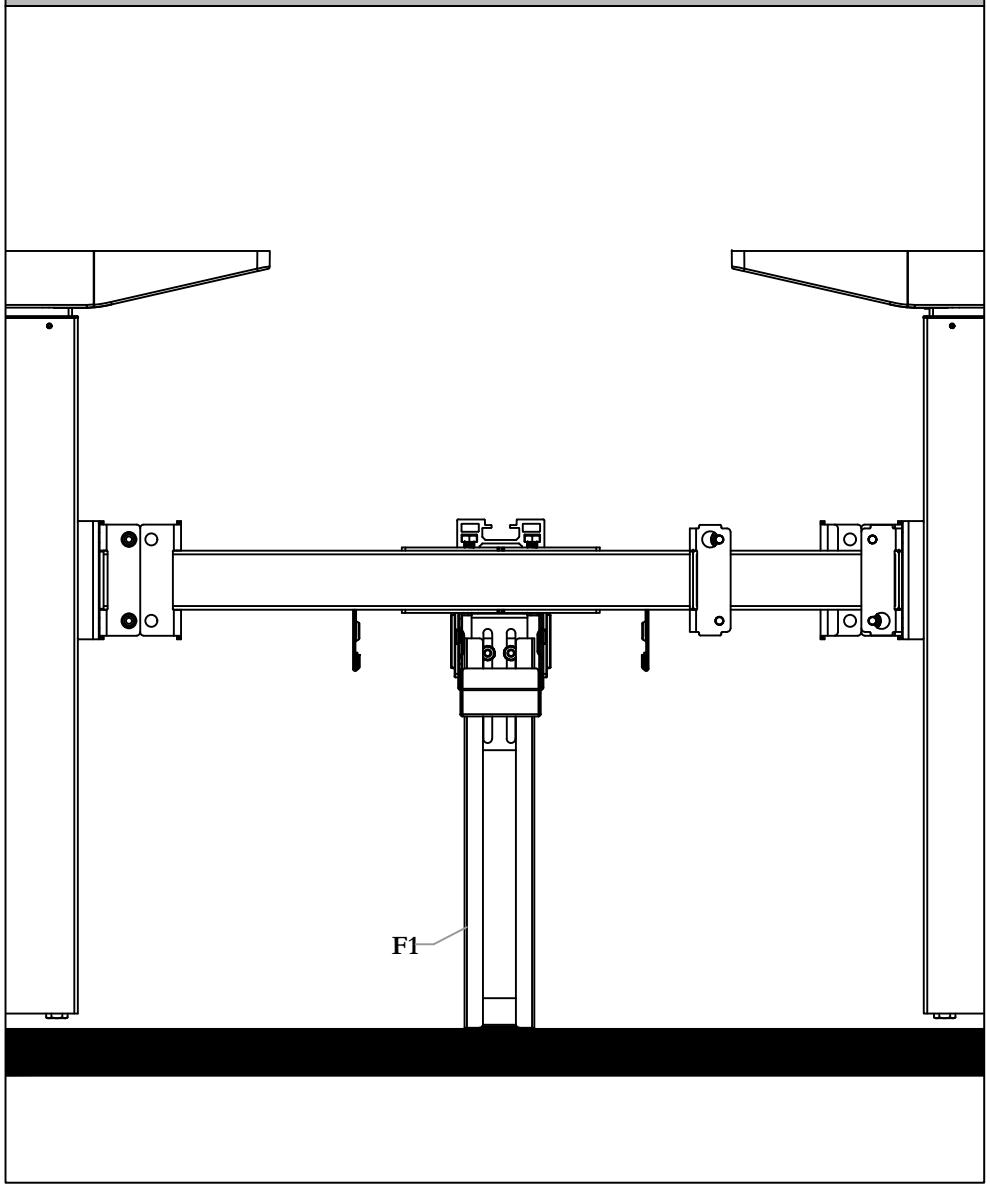

STEP 6: Adjust cover to level onto finished floor.

TIGHTEN SCREW

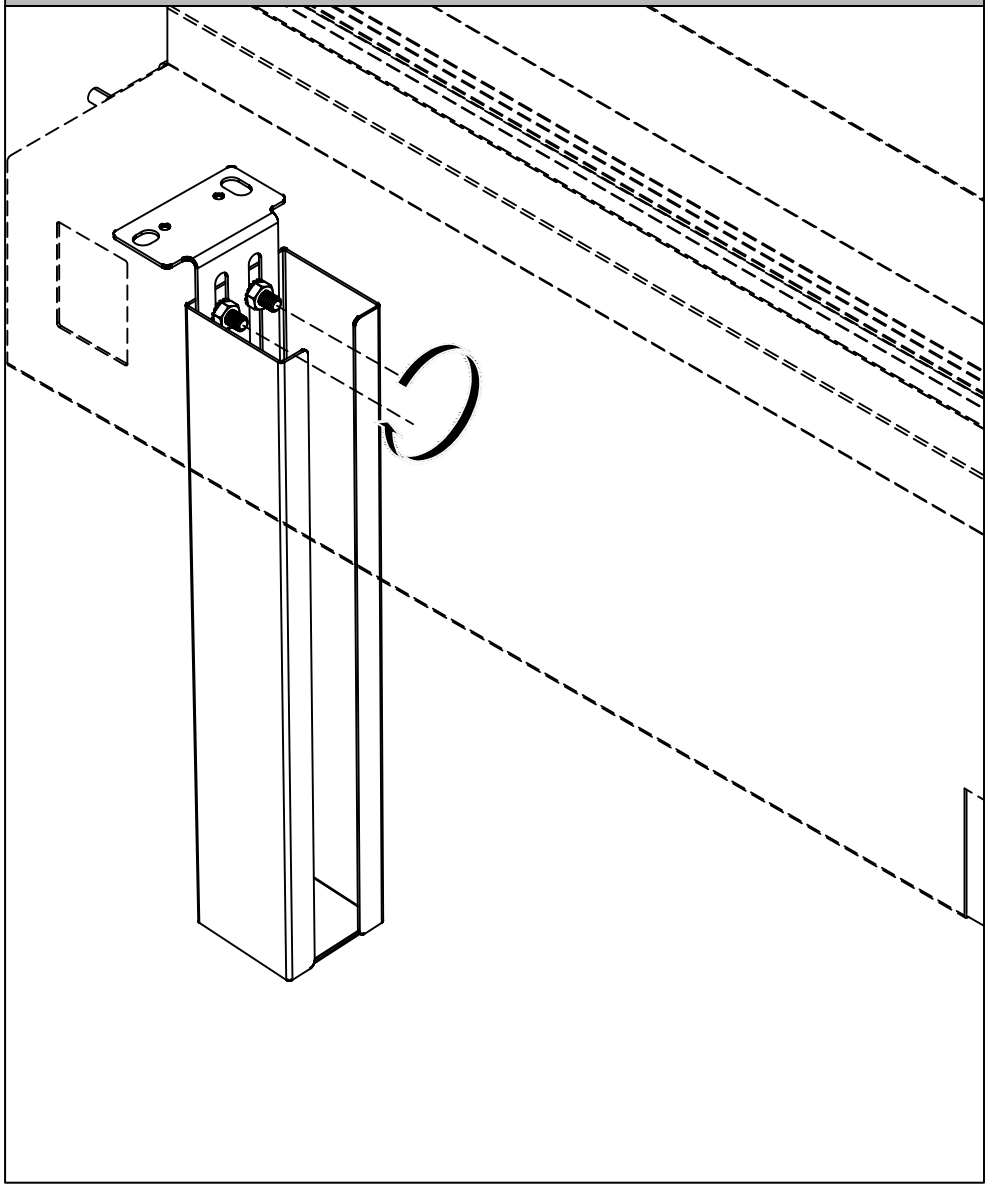

STEP 7: Tighten screw to secure base feed to table.

INSERT CABLE INTO BASE FEED COVER

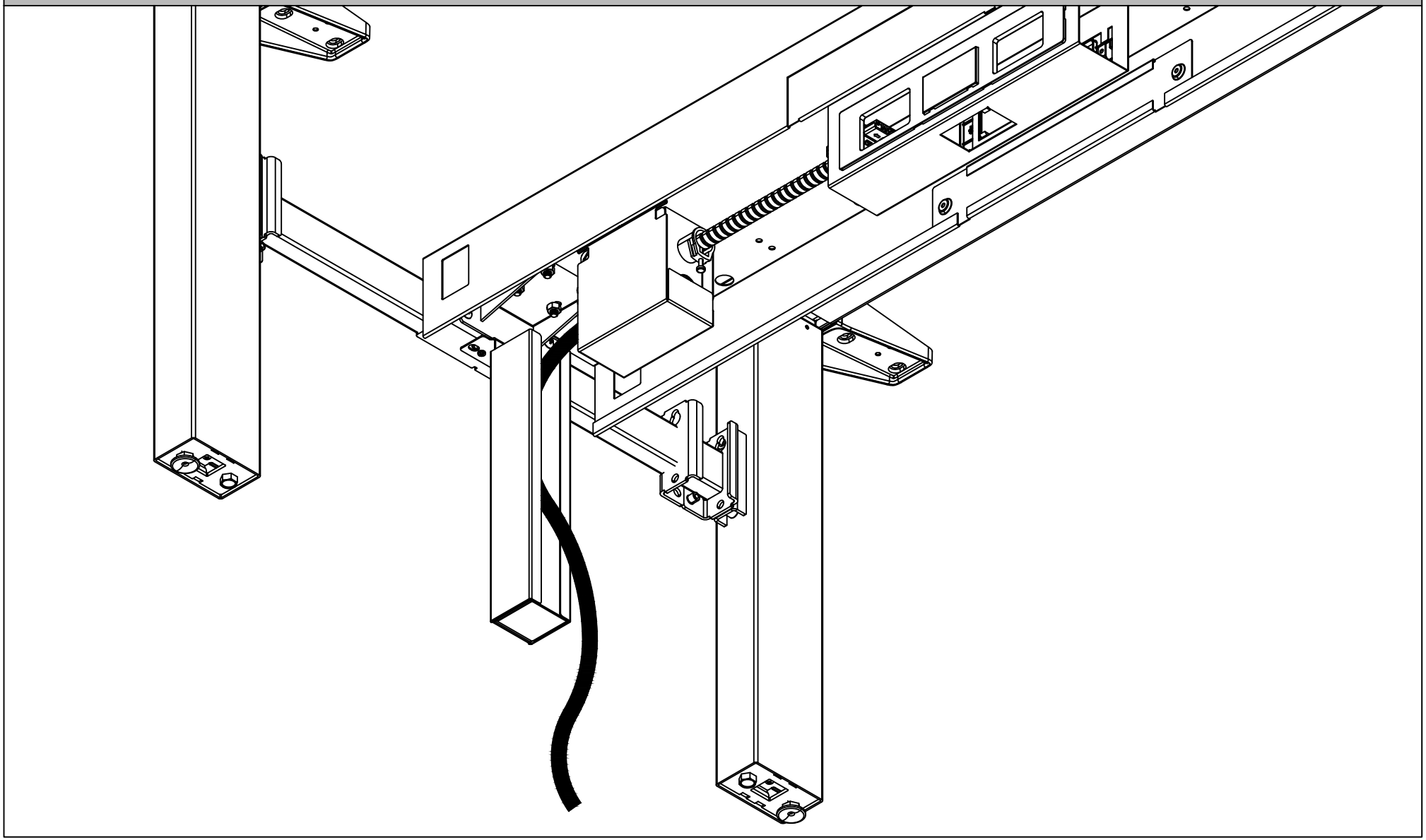

STEP 8: Insert Base Feed cable into Base Feed Cover as shown on illustration above.

ORIENTATION OF BASE FEED

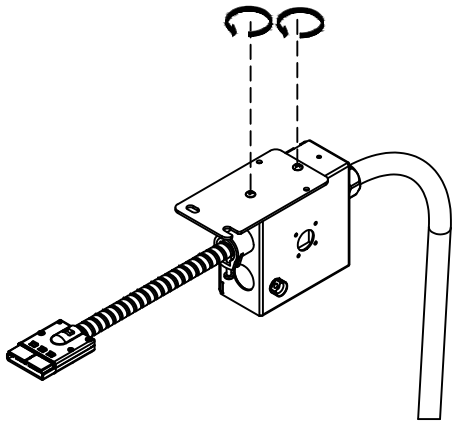

REMOVE SCREWS FROM PLATE

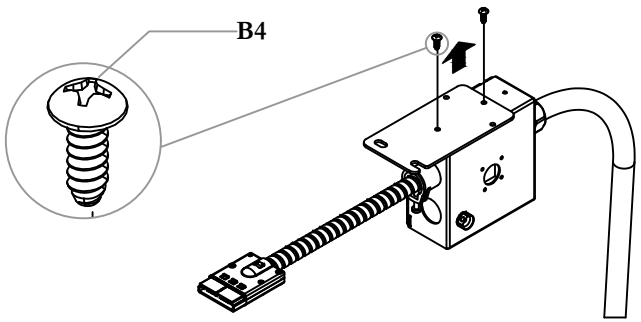

STEP 9: Remove screws to loosen mounting plate for base feed

PARALLE AND VERTICAL ORIENTATION

NOTE: Parallel Orientation

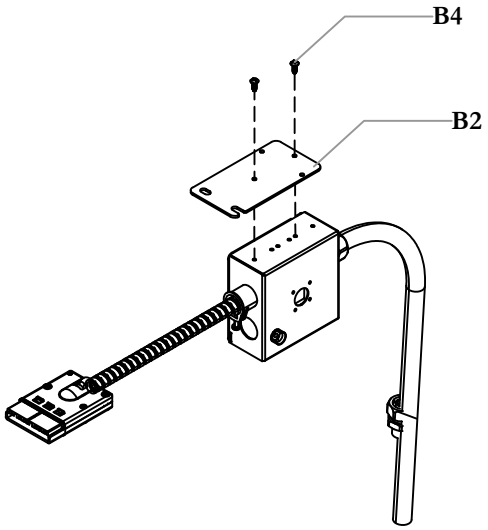

NOTE: Vertical Orientation

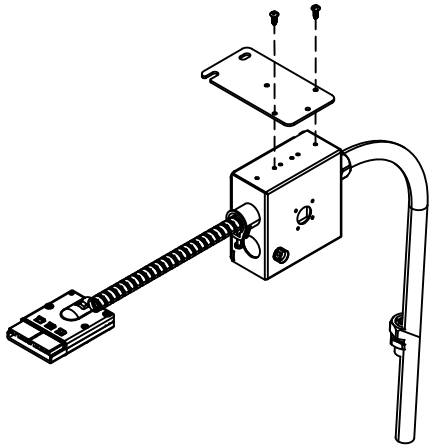

STEP 10: Reposition the mounting plate to parallel or vertical orientation

INSTALL MID BASE FEED

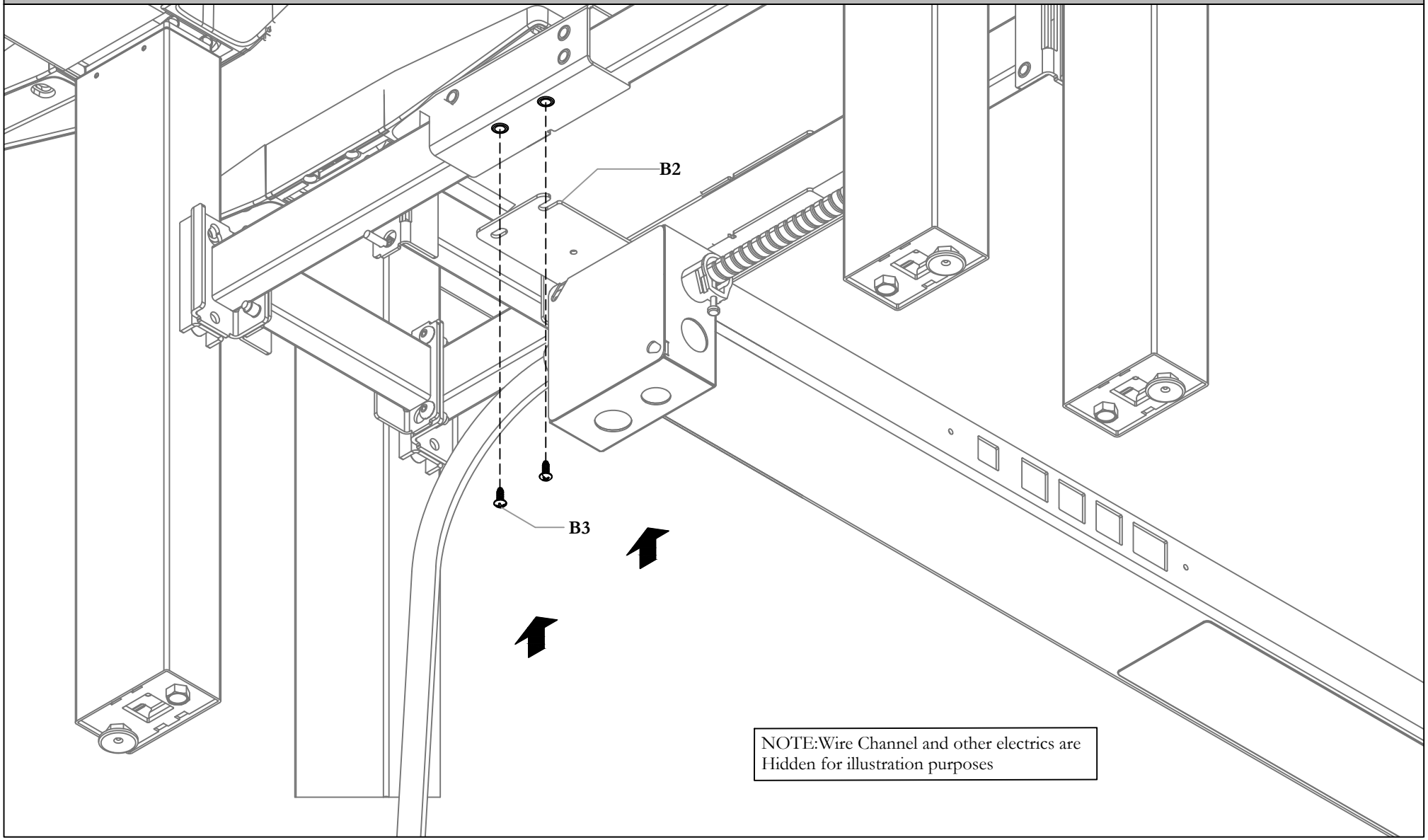

STEP 11: Fasten Middle Bracket and Base Feed. Install assembly to Stretcher bar as shown. Installation for Chicago Power Module is Similar.

NOTE

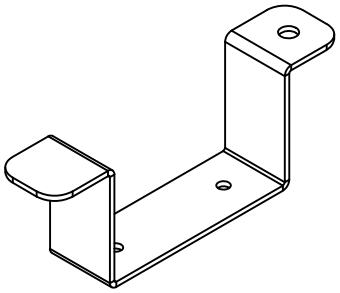

NOTE: Wire Management

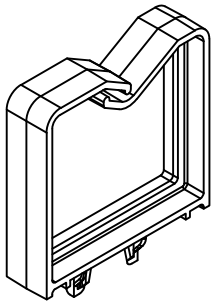

NOTE: M-Clips

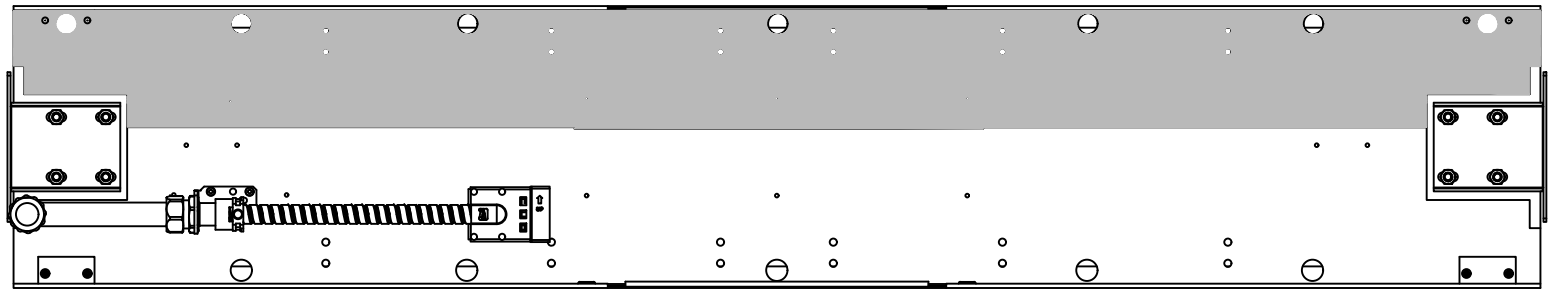

STEP 12: Installer is to determine the layout for the data, wire management brackets and m-clips in the hatched area

Navigate Ceiling Feed (HNBECF), Chicago Ceiling Feed (HNBECFCH), Power Pole - End (HNBEPP_E)

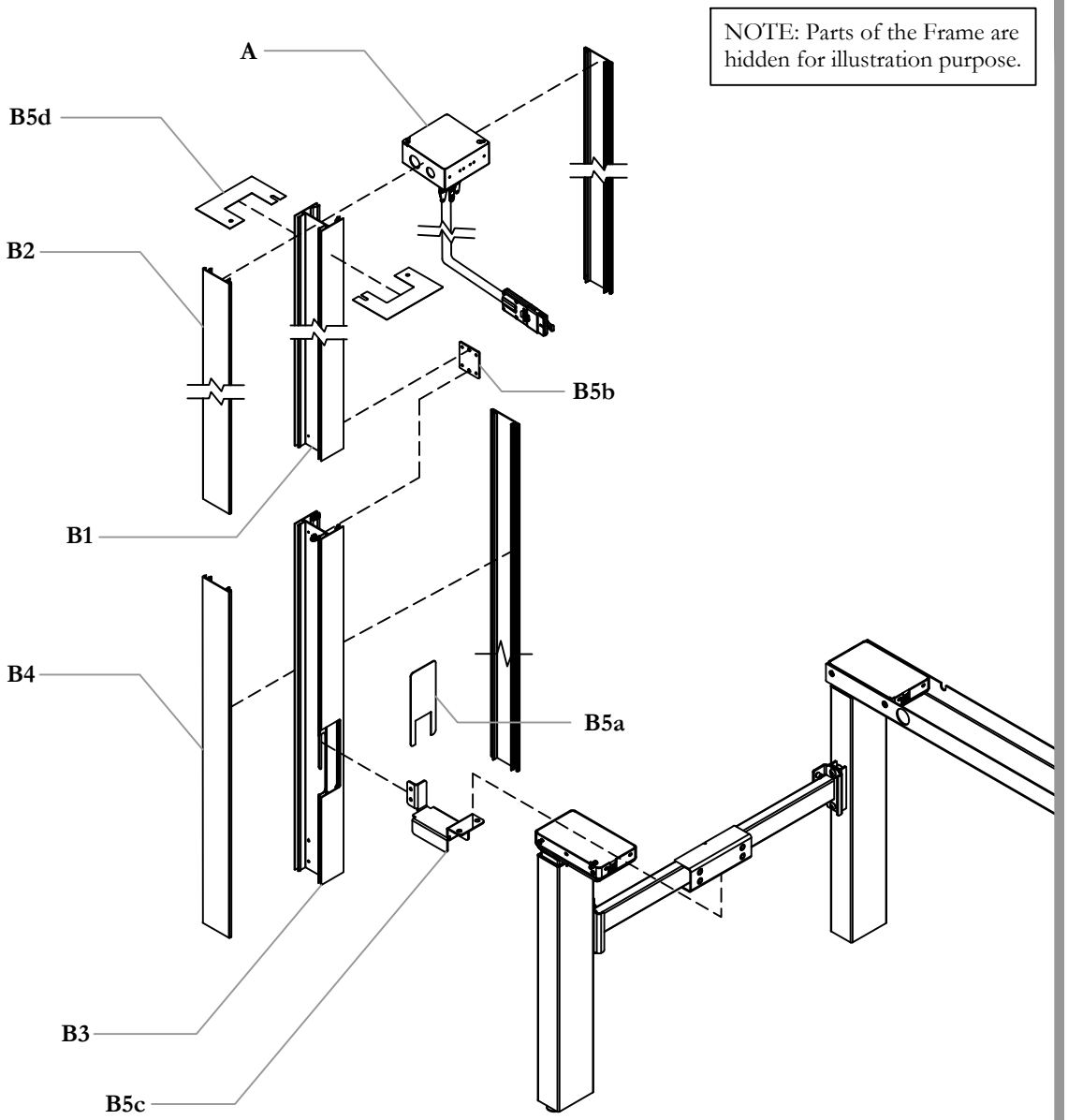

Part and Product Identification

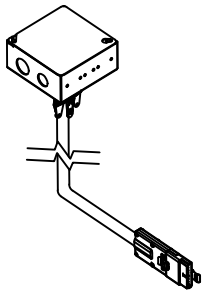

A - Ceiling Feed (HNBECF) x1

OR

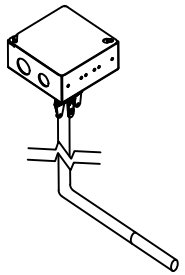

- Chicago Ceiling Feed (HNBECFCH) x 1

WARNING!
Installers must not perform any electrical work while power is on. Care should be taken to test and confirm power is off prior to beginning any assembly and/or disassembly.
Do not connect to power source until installation is complete.
Connection to the building power source must be performed by a licensed electrician.
Failure to follow these instructions poses significant risk of electrical shock, injury and damage.
Only licensed electricians are authorized to make electrical connections in accordance with applicable codes and regulations.
For Teknion Base Feed harnesses, any replacement of the fitting on the hardwired end of the liquidtight whip must be done by a licensed electrician using only fittings approved for the type of liquidtight conduit used on the base feed harness.
Failure to exactly follow these instructions renders Teknion's warranty and safety certifications null and void.

Part and Product Identification

B - Power Pole - End (HNBEPP_E) x 1



B1 - Upper Power Pole Body (AEA21-0200-XX) x 1



B2 - Upper Power Pole Cover Cap (AEA23-E014-XX) x 2



B3 - Lower Power Pole Body - HAB END 33.25in (AEA21-0200-10) x 1



B4 - Power Pole Base Cover Cap (AEA23-E014-06) x 2

B5 - Hardware Kit For Navigate Height Adjustable Bench Power Pole (X01-4349\E) x 1

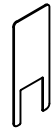

B5a - DUS II Power Pole Wire Cover (MPA15-E648) x 1

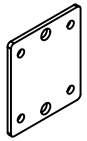

B5b - Bracket To Extend Height Of Leverage Power Pole (MPA15-E152) x 1

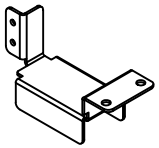

B5c - HNB End Pole Bracket (MPA15-E787) x 1

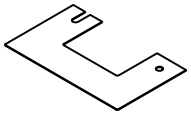

B5d - Ceiling Plate For EPQE (MPA15-2666) x 2

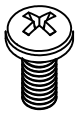

B5e - Screw, #8 x 1/2" RND, ROB, Bright Zinc Type B (FS8-5/8RRB) x 4

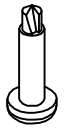

B5f - SD_#8-18_0.750_ ZN_PN_QD *RR (E01-0072) x 2



B5g - Plastic Wire Tip/Cap (PCAPLUG8) x 4

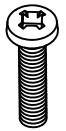

B5h - #8-32, 3/4" Long Pan Head, Quadrex, Machine Screw (E01-0544) x 2

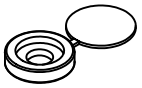

B5i - Snap Cap / Cover Cap (FM315-902) x 2



B5j - 1/4"-20 Nut (E03-0254) x 2

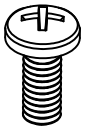

B5k - 1/4-20 5/8" Long Screw For ECPQ (E01-0098) x 4

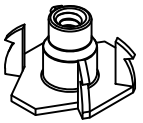

B5l - #8-32 x 7/16" Barrel 4 Prong T-Nut, Small Base Step Barrel (E03-1152) x 2



B5m - Grip Washer, 1/4" (FW1/4) x 2

B5n - Scapa S4016 Double Sided Foam Tape (E08-0281) x 2

INSTALL BRACKET TO POWER POLE

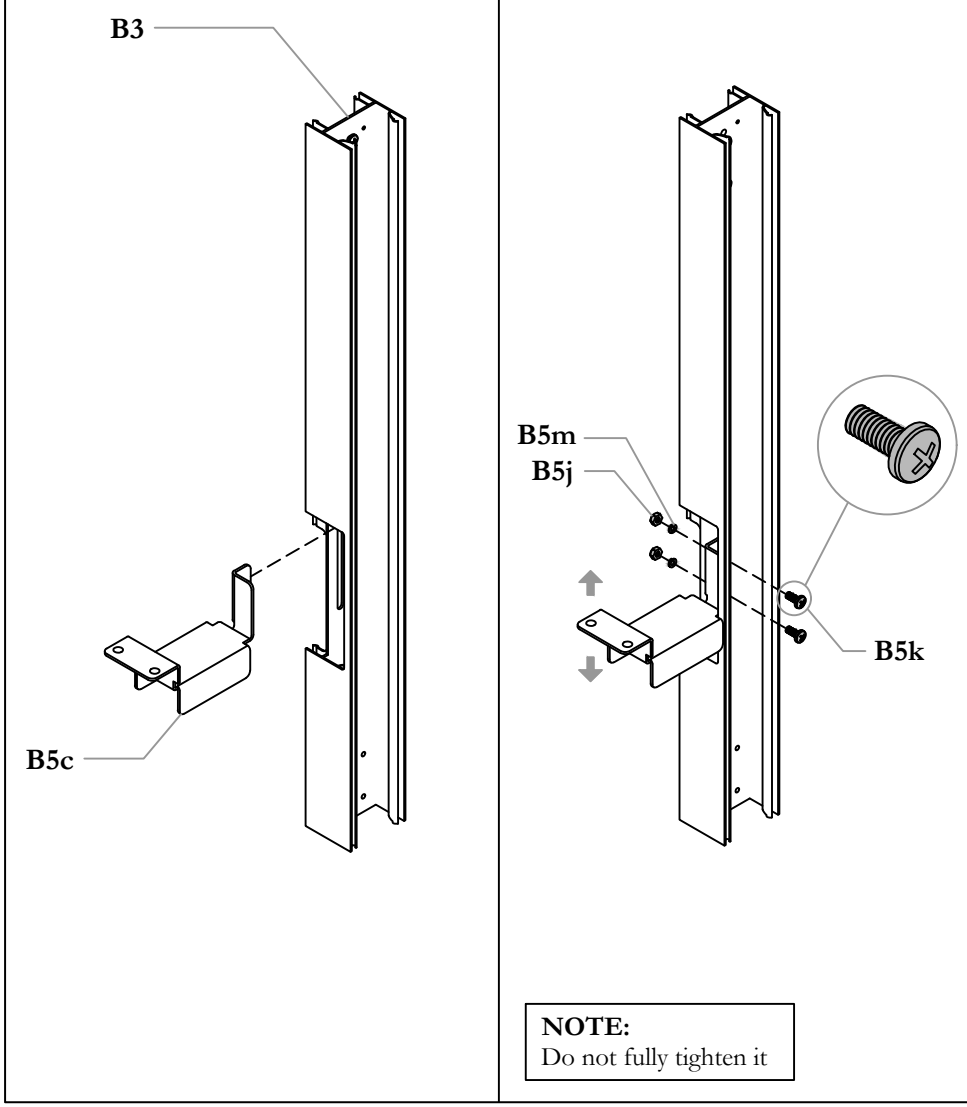

STEP 1: Fasten Bracket (B5c) to Lower Power Pole Body (B3) with provided Screws (B5k), Washers (B5m) and Nuts (B5j). Do not fully tighten as bracket needs to slide up or down.

ALIGN LOWER POWER POLE TO HAB FRAME

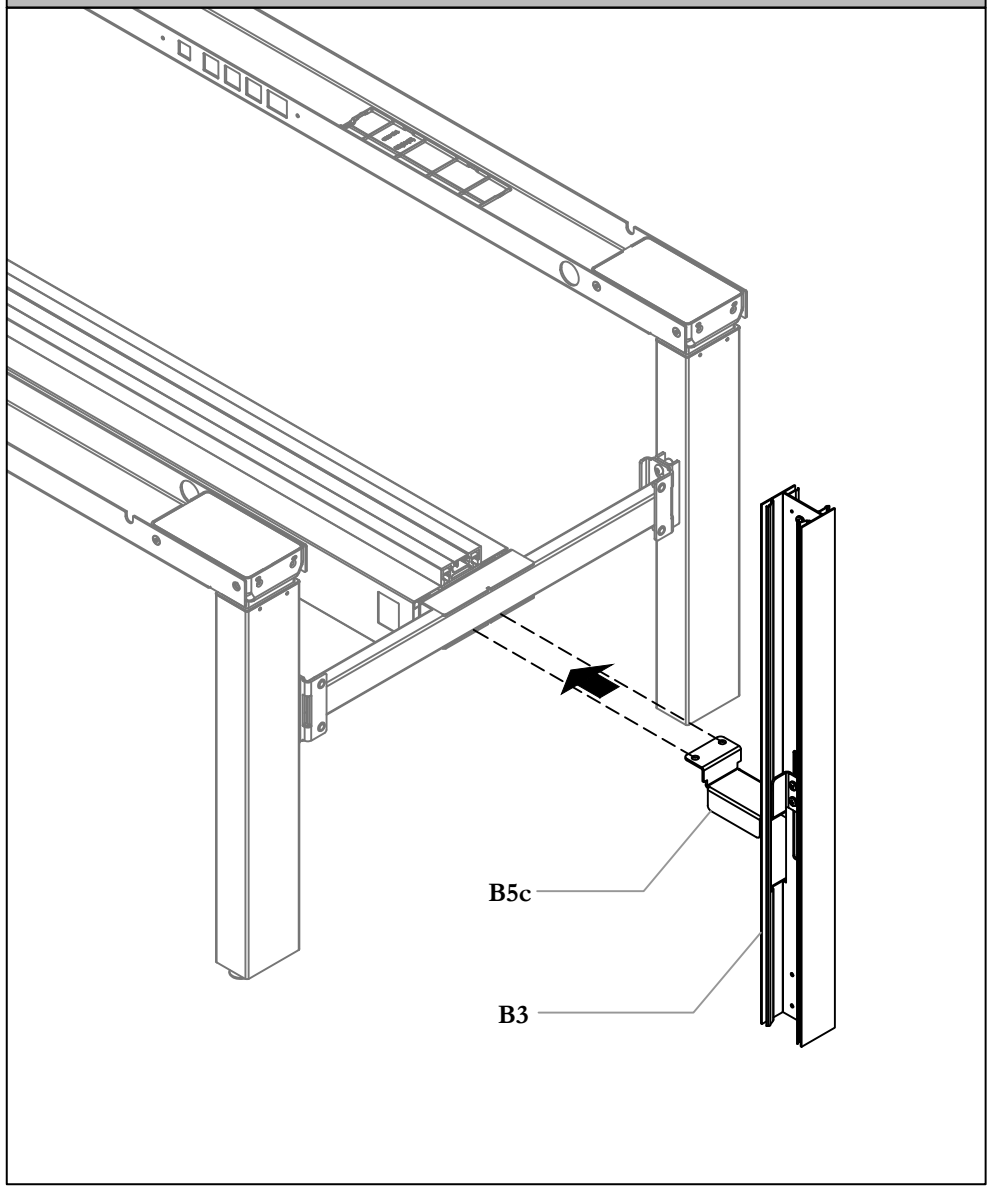

STEP 2: Bring Lower Power Pole Body (B3) underneath Height Adjustable Bench (HAB) Frame-Stretcher Bar.

SECURE BOTTOM EXTRUSION TO FRAME

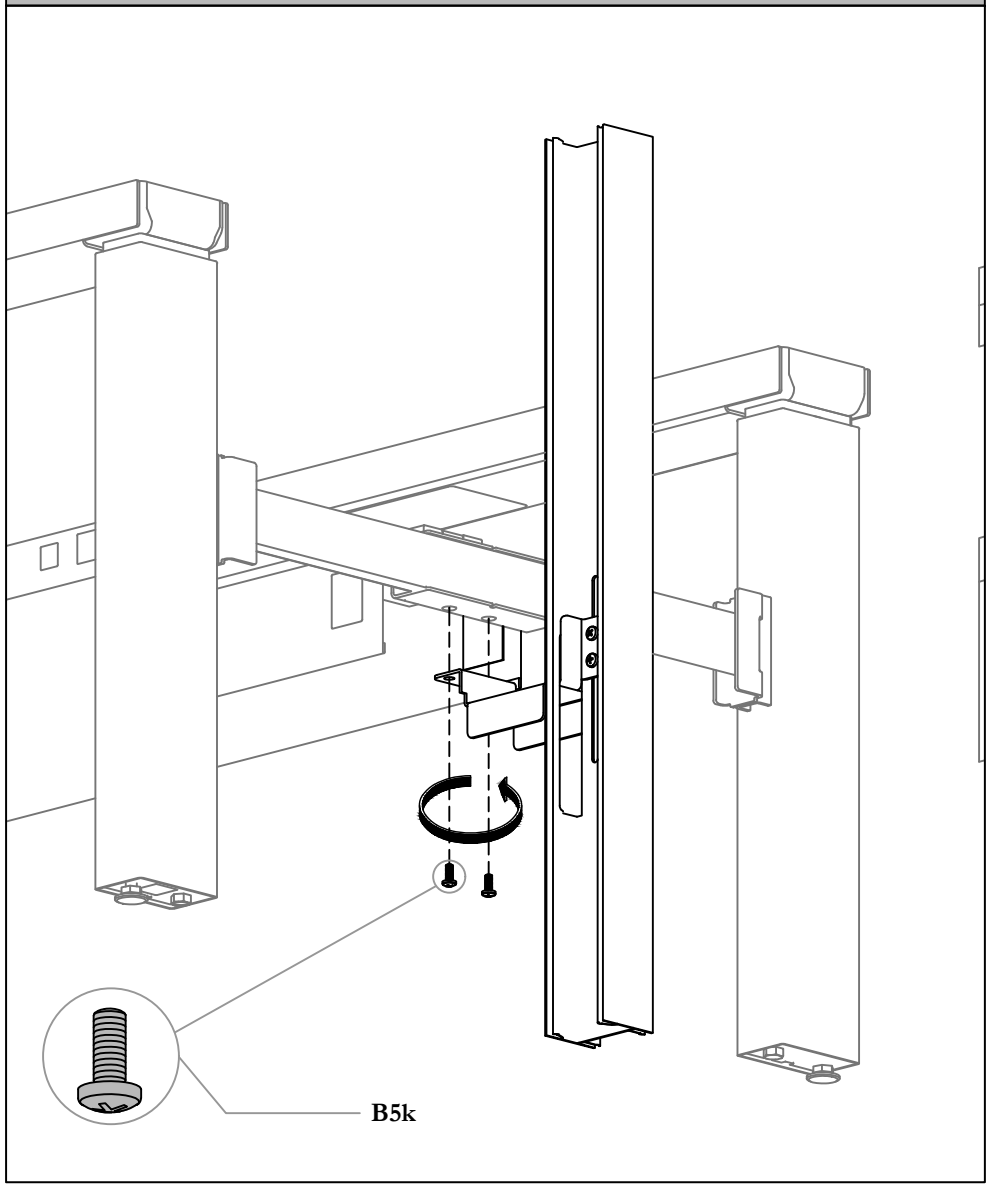

STEP 3: Use Screws (B5k) provided to fasten Power Pole Bracket to HAB Frame as shown.

TIGHTEN BRACKET TO LOWER POWER POLE

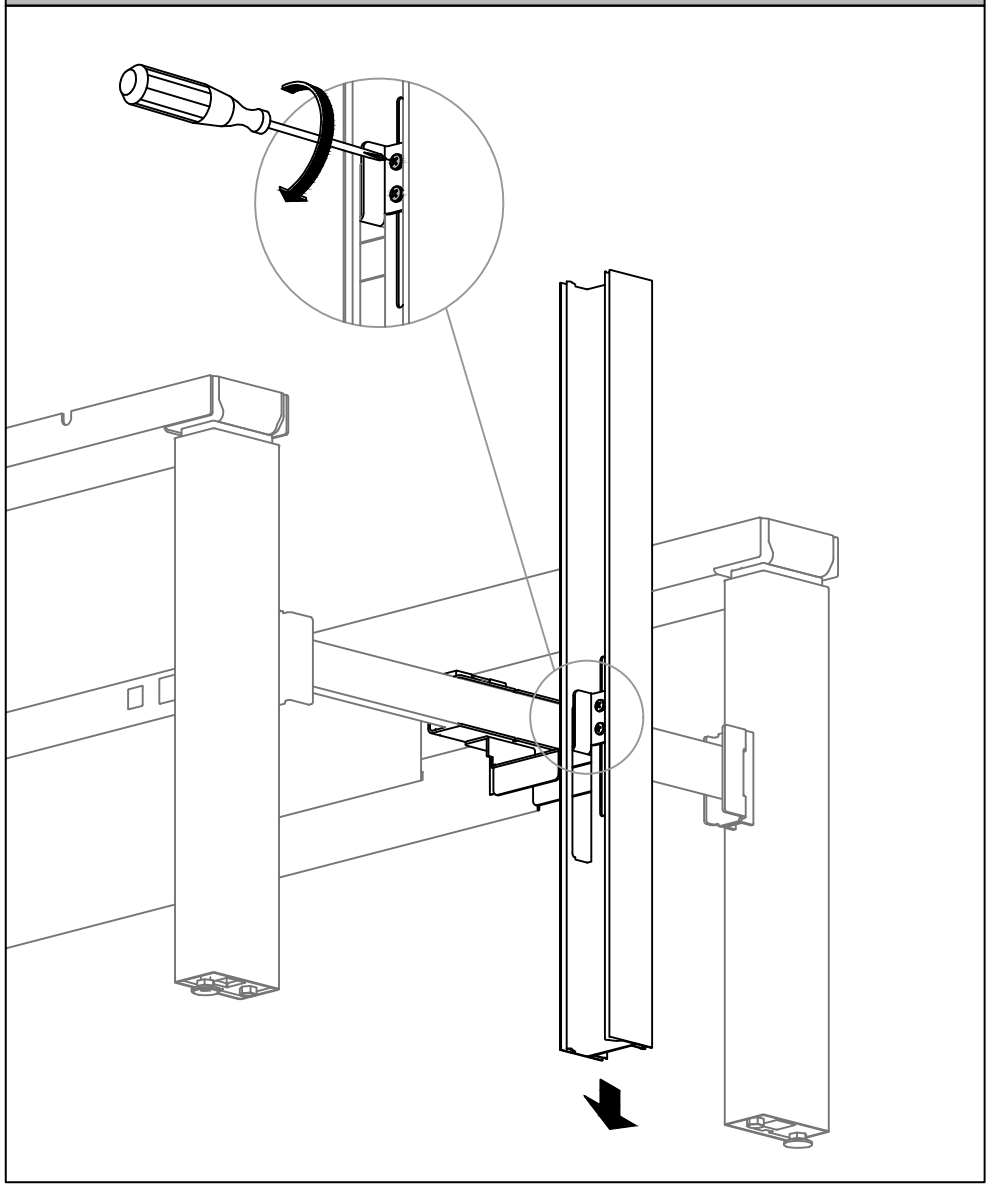

STEP 4: Make sure Lower Power Pole Body sits on the floor & tighten Bracket to Lower Power Pole Body.

CEILING CUT OUT

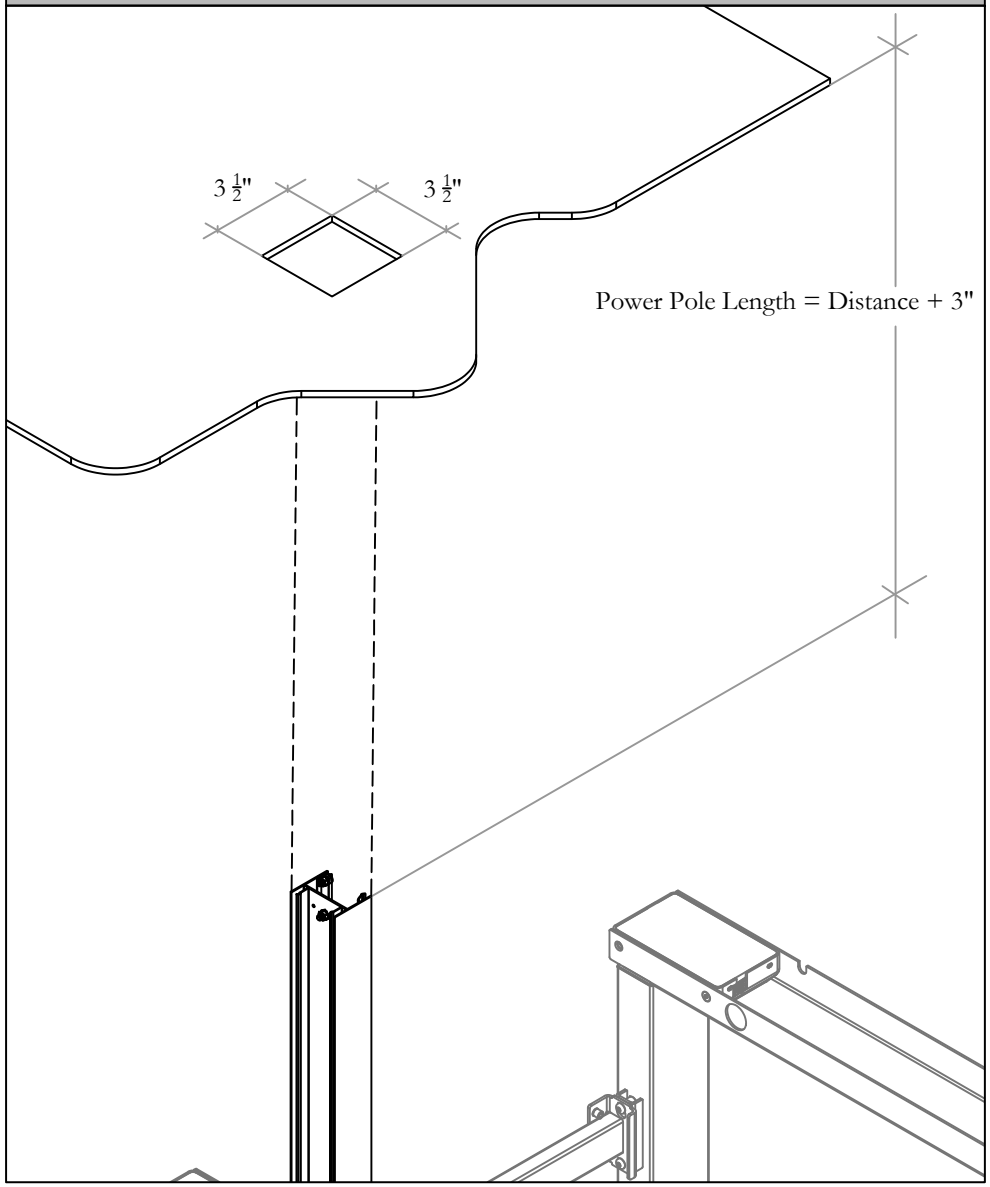

STEP 5: Mark Power Pole position on the ceiling using Plum Bob line. Cut 3 1/2" x 3 1/2" opening. Measure distance from top of the Lower Power Pole Body to the ceiling. Add approx 3" to that dimension and cut Power Pole and Power Cover to that measurement.

INSTALL UPPER EXTRUSION

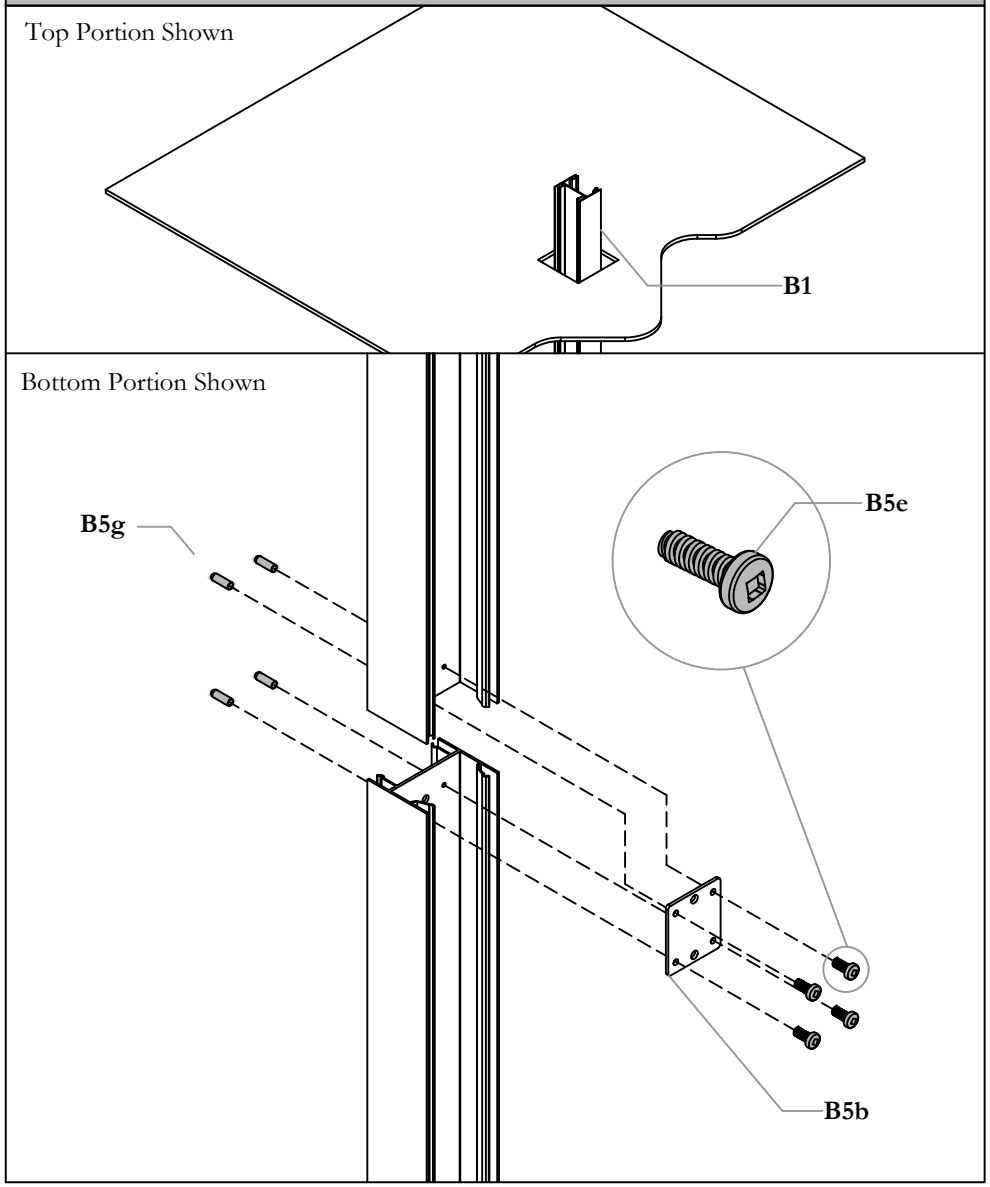

STEP 6: Insert Upper Power Pole Body (B1) inside ceiling cut-out (Uncut edge down). Place the bottom surface of the Upper Power Pole Body on top of Lower Power Pole Body and connect them together using Connecting Plate (B5b), Screws (B5e), and Plastic Cap (B5g).

INSTALL CEILING FEED

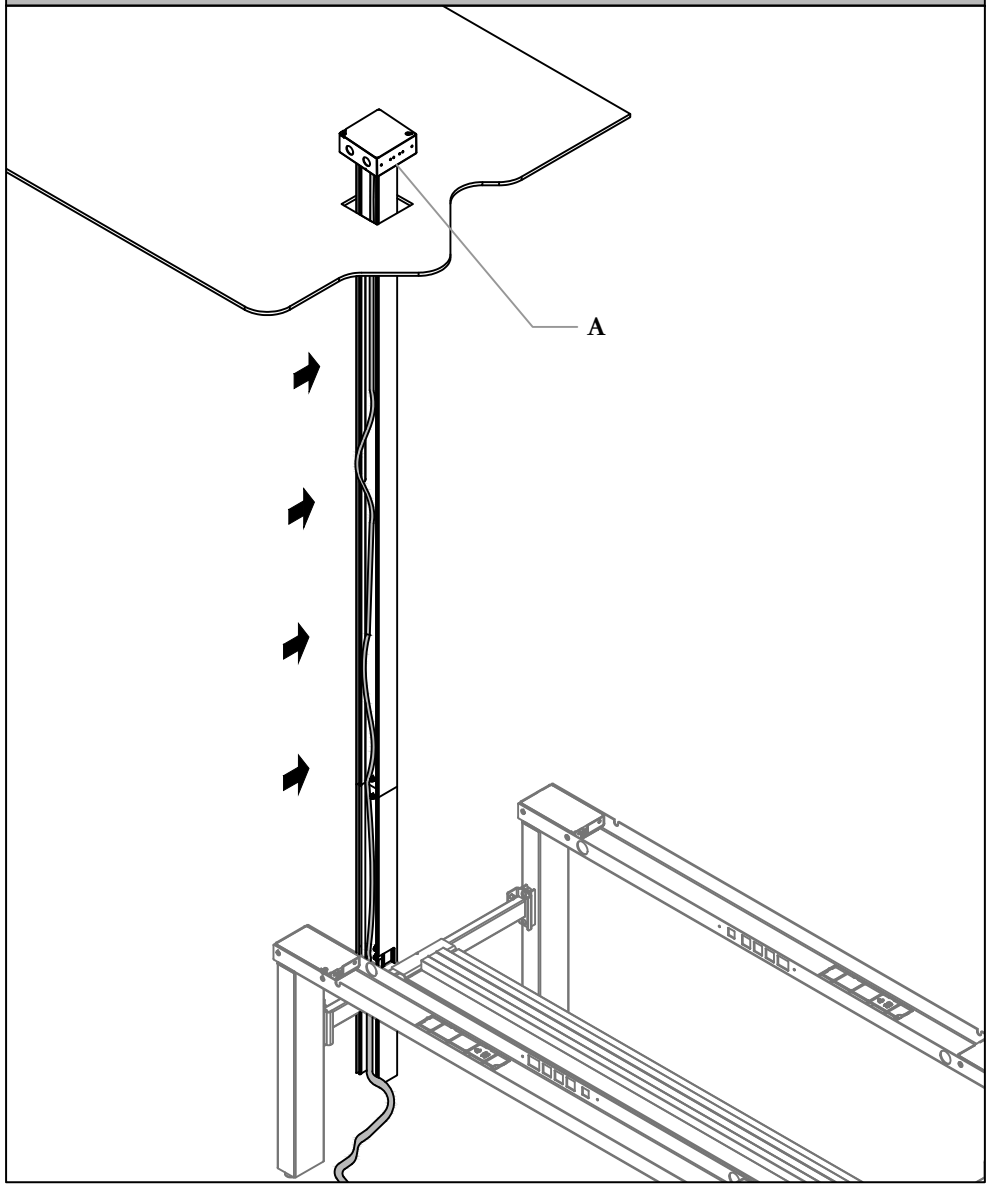

STEP 7: Drop Ceiling Feed (A) cable down through ceiling cut-out down along the Power Pole Body. Slide junction box bracket inside Power Pole Body.

INSTALL CEILING FEED

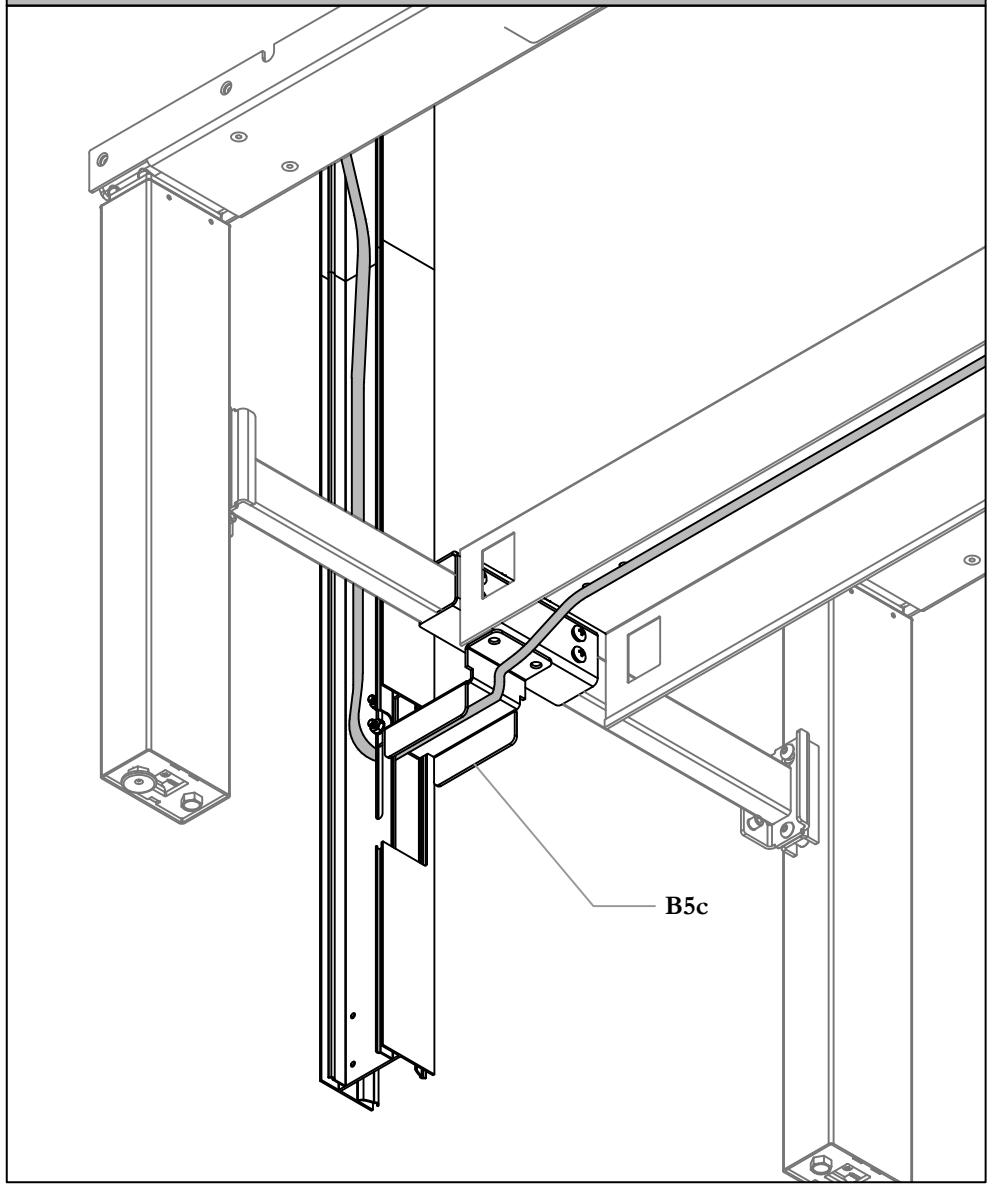

STEP 8: Feed cable underneath through the Bracket (B5c).

WARNING! *Do not connect to power source until installation is complete. *Connection to the building power source must be performed by a licensed electrician.*Not following these instruction could result in damage and/or injury. *It is recommended that electrical connections be made under the supervision of a licensed electrician in accordance with applicable codes and regulations.

ATTACH LOWER COVER

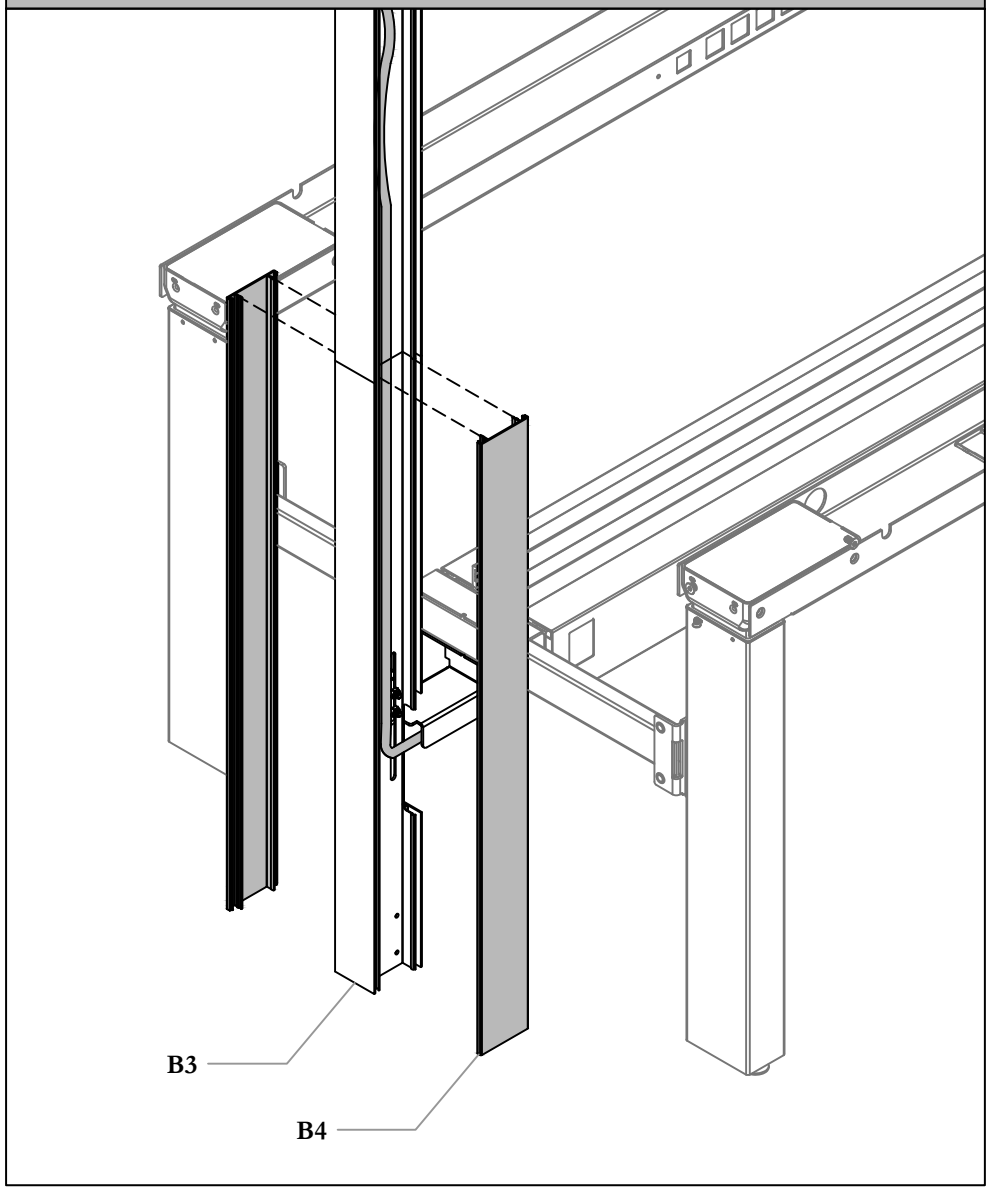

STEP 9: Tuck cable and attach Power Pole Base Covers (B4) by engaging them into Lower Power Pole Body (B3).

ATTACH UPPER COVER

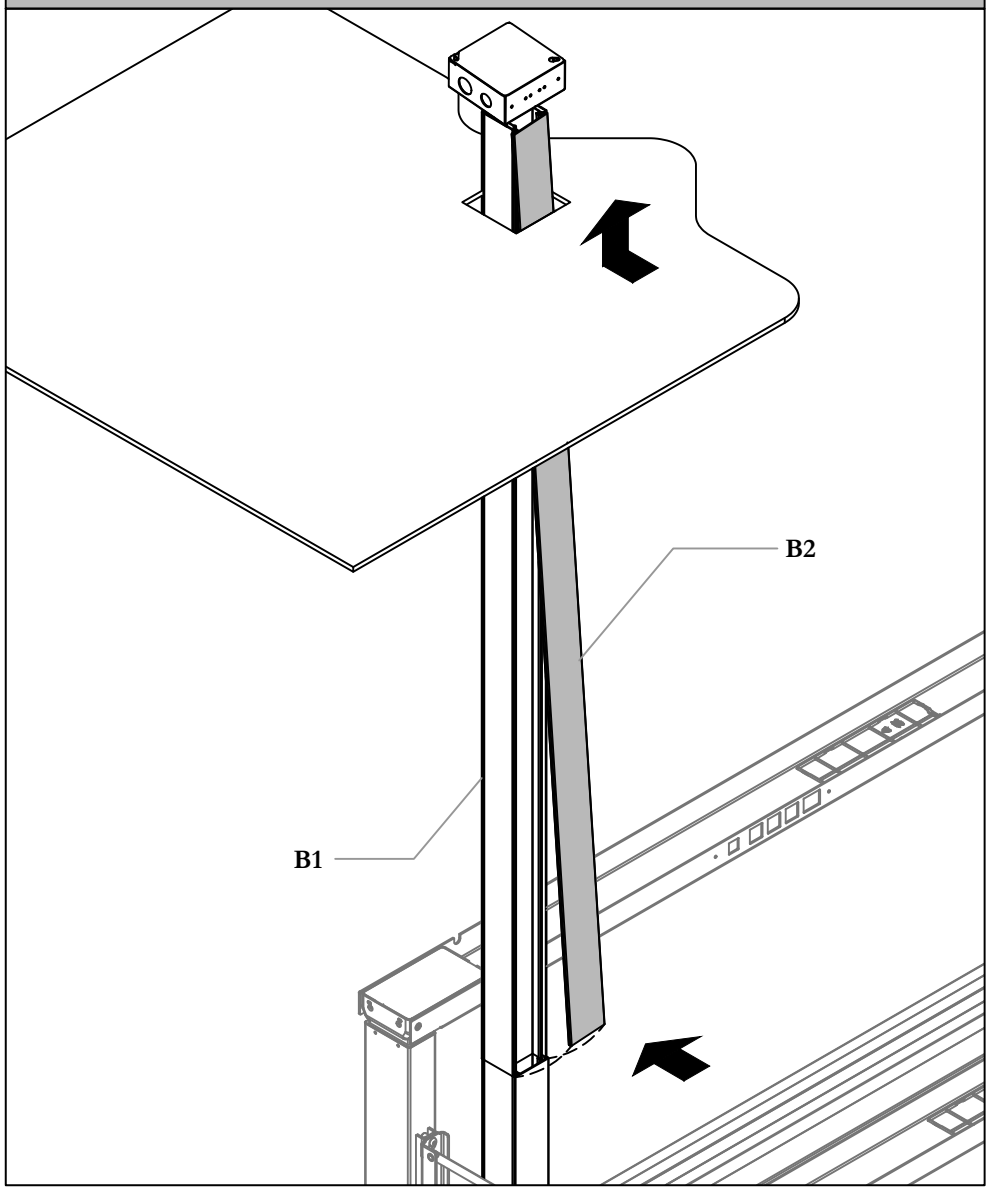

STEP 10: Insert Upper Power Pole Covers (B2) inside ceiling cut-out then engage into Upper Power Pole Body (B1).

WARNING! *Do not connect to power source until installation is complete. *Connection to the building power source must be performed by a licensed electrician.*Not following these instruction could result in damage and/or injury. *It is recommended that electrical connections be made under the supervision of a licensed electrician in accordance with applicable codes and regulations.

ATTACH CEILING PLATE & DRILL HOLES

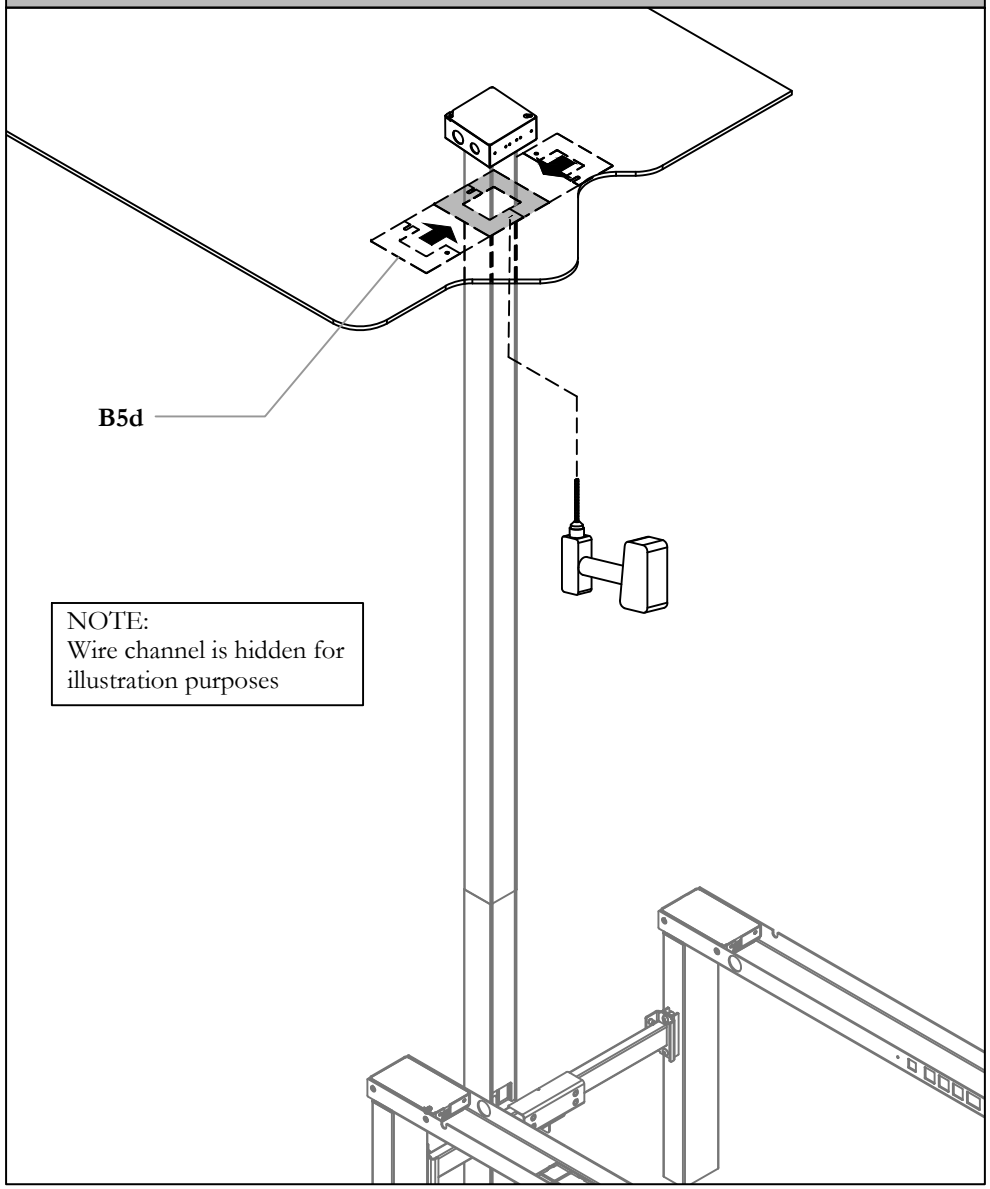

STEP 11: Attach Ceiling Plates (B5d) to Power Pole Body under the Ceiling. Drill holes for T-Nuts using Ceiling Plates as a template to determine hole locations.

INSTALL PLATES

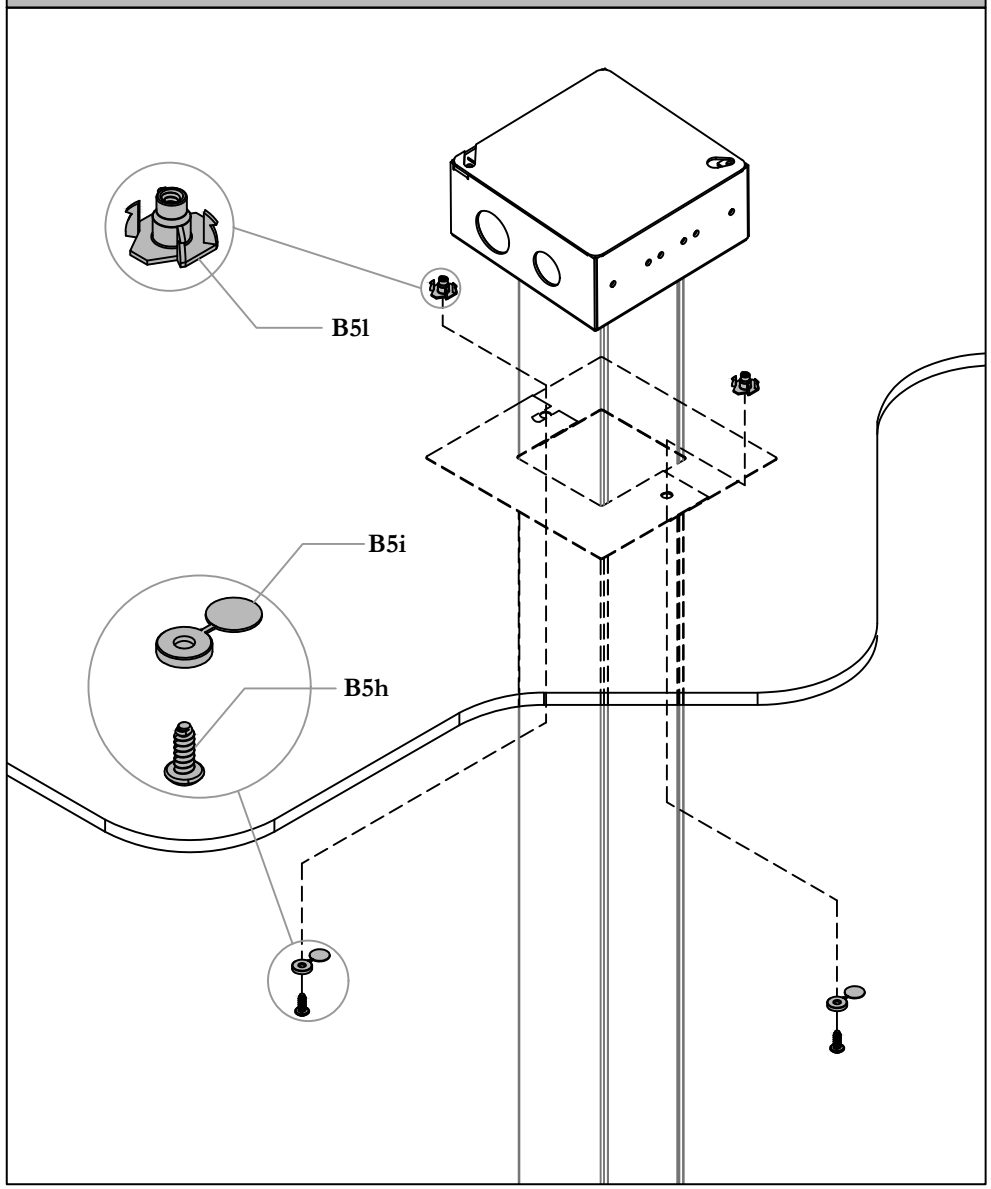

STEP 12: Push T-nuts (B5l) inside holes from the Top of the Ceiling tile. Wrap Cover plates around the Power Pole and fasten using Screws (B5h) and Cover Cap (B5i) provided.

WARNING! *Do not connect to power source until installation is complete. *Connection to the building power source must be performed by a licensed electrician.*Not following these instruction could result in damage and/or injury. *It is recommended that electrical connections be made under the supervision of a licensed electrician in accordance with applicable codes and regulations.

INSTALL COVER PLATES

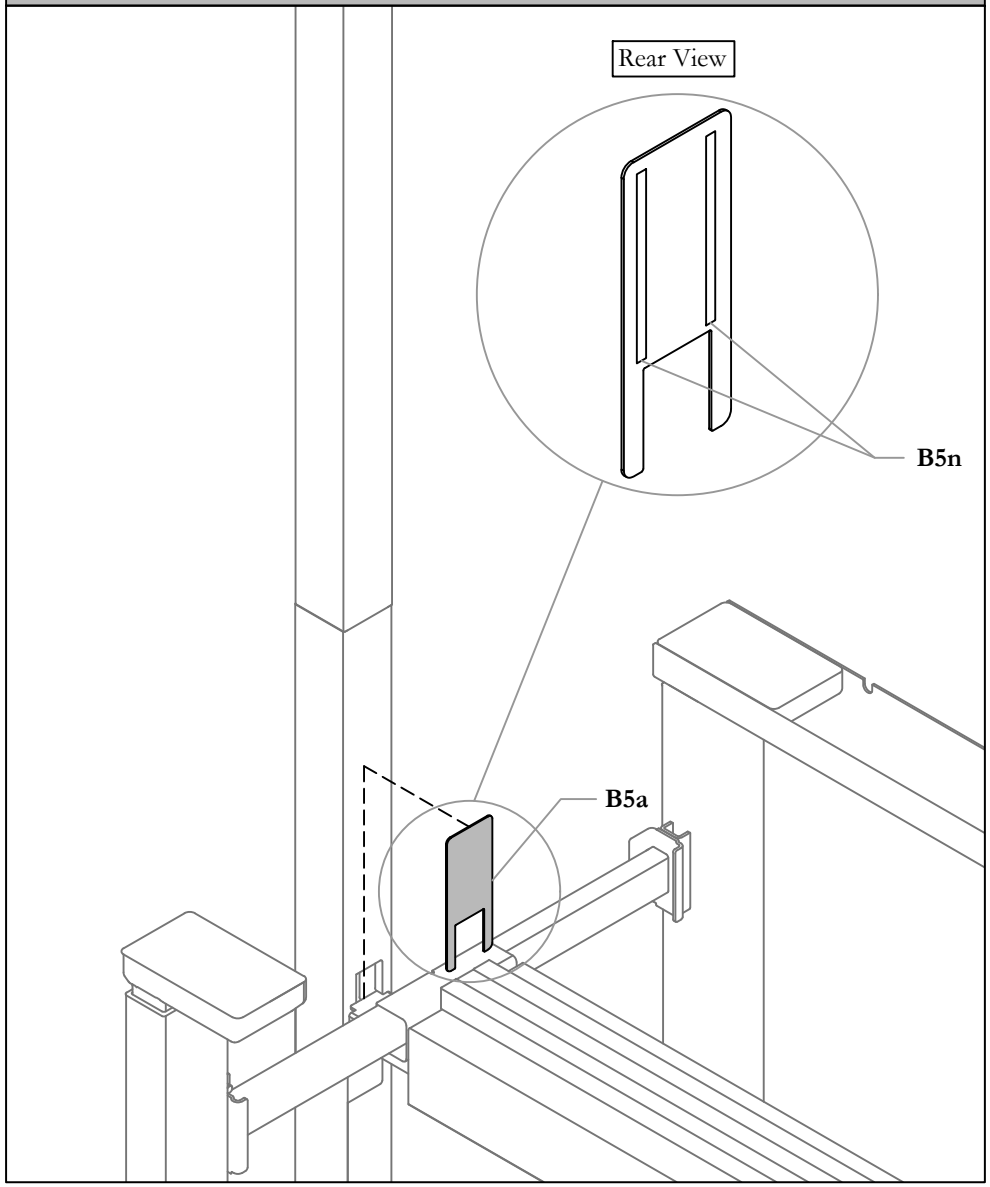

INSTALL COVER PLATES

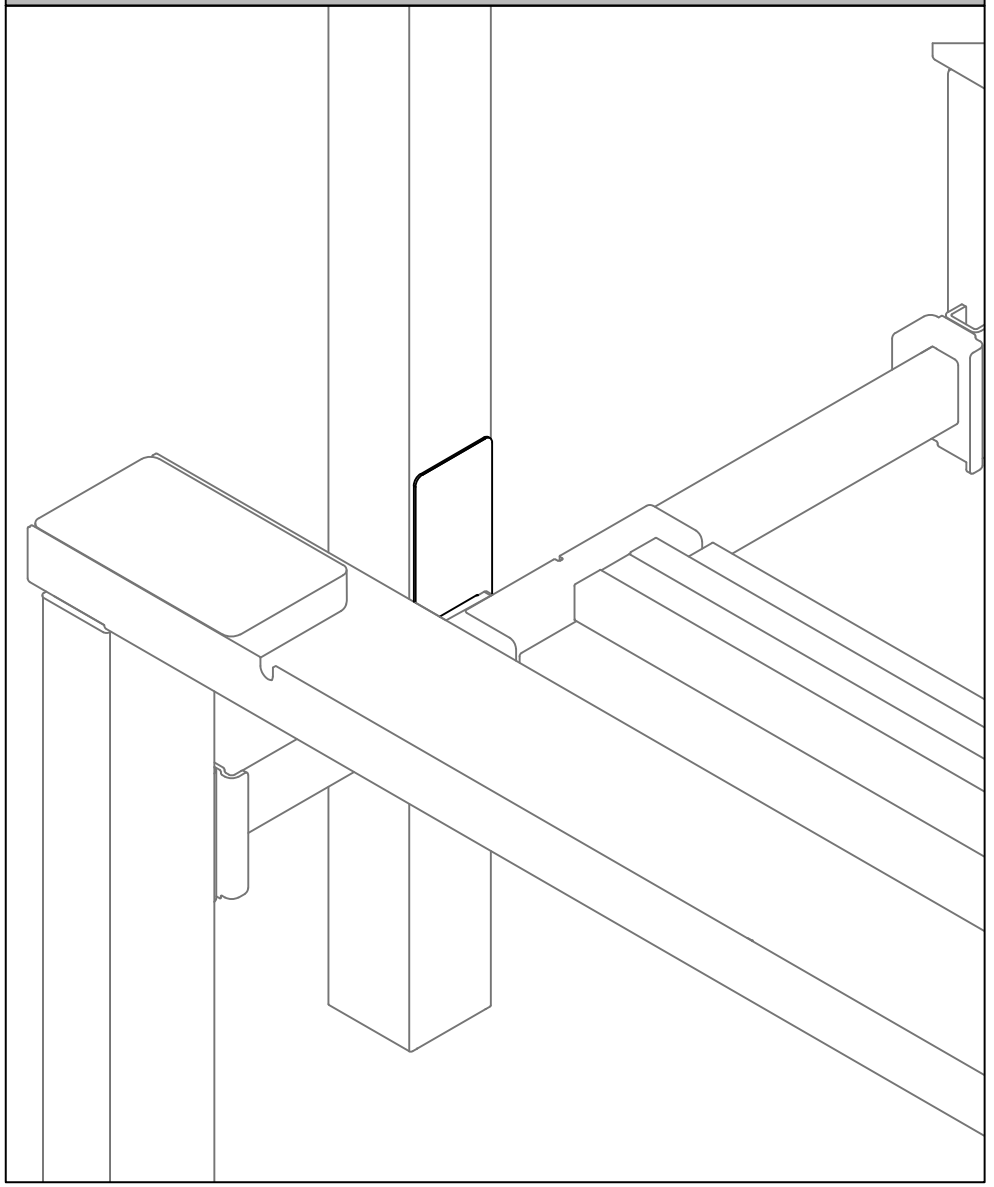

STEP 13: Expose the adhesive of the Double Sided Tape (B5n) on the back of the Cover Plate (B5a) and slide Cover Plate from the top to cover cut-out on the side of Power Pole.

WARNING! *Do not connect to power source until installation is complete. *Connection to the building power source must be performed by a licensed electrician.*Not following these instruction could result in damage and/or injury. *It is recommended that electrical connections be made under the supervision of a licensed electrician in accordance with applicable codes and regulations.

Navigate Power Pole - Mid (HNBEPP_M), Navigate Power Pole Single Sided - Mid (HNBEPP_S), Navigate Ceiling Feed (HNBECF) & Navigate Chicago Ceiling Feed (HNBECFCH)

NOTE:
HNBEPP_M is shown as an example.

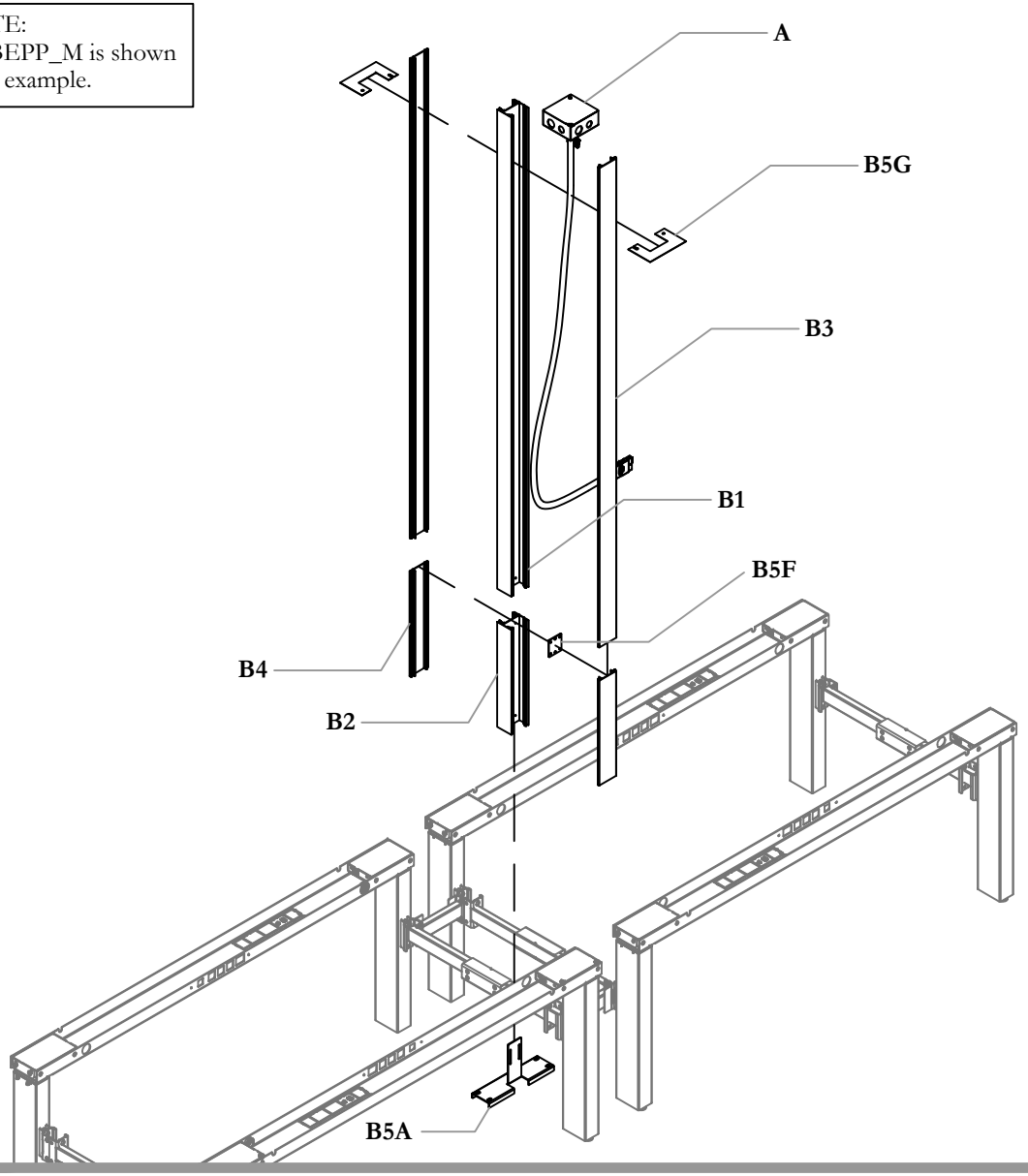

Part and Product Identification

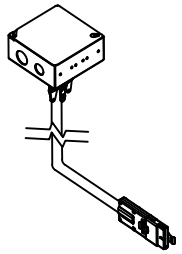

A - Ceiling Feed (HNBECF) x1

OR

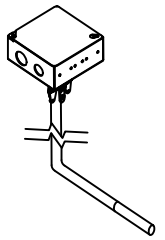

- Chicago Ceiling Feed (HNBECFCH) x 1

WARNING!
Installers must not perform any electrical work while power is on. Care should be taken to test and confirm power is off prior to beginning any assembly and/or disassembly.
Do not connect to power source until installation is complete.
Connection to the building power source must be performed by a licensed electrician.
Failure to follow these instructions poses significant risk of electrical shock, injury and damage.
Only licensed electricians are authorized to make electrical connections in accordance with applicable codes and regulations.
For Teknion Base Feed harnesses, any replacement of the fitting on the hardwired end of the liquidtight whip must be done by a licensed electrician using only fittings approved for the type of liquidtight conduit used on the base feed harness.
Failure to exactly follow these instructions renders Teknion's warranty and safety certifications null and void.

Part and Product Identification

B - Power Pole Mid - Standard (HNBEPP_M) OR Power Pole Mid Single-Sided (HNBEPP_S) x1



B1 - Upper Power Pole Body
(AEA21-0200-X) x1



B2 - Lower Power Pole Body
(AEA21-0200-09) x1



B3 - Upper Power Pole Cover
(AEA23-E014-X) x1



B4 - Lower Power Pole Cover
(AEA23-E014-10) x1

B5 - Hardware Kit For Navigate Height Adjustable Bench Power Pole (X01-4349/M OR X01-4349/S) x1

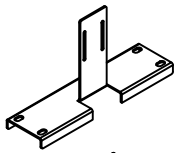

B5A - HAB Mid Mounting Bracket
(MPA15-E786) x1
(for X01-4349\M)

OR

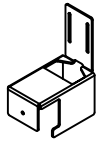

- HNB SS Power Pole Bracket
(MPA16-E064) x1
(for X01-4349\S)

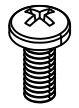

B5B - 1/4-20 5/8" Long Screw
(E01-0098) x4 (for X01-4349\M)

OR

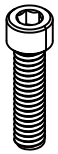

- SHCS 1/4-20 X 1"
(E01-0181) x1 (for X01-4349\S)



B5C -Thumb Screw Knob
(E03-0131) x1
(for X01-4349\S)



B5D -#8-5/8" Quad Drive
(FS8-5/8RRB) x6



B5E - Plastic Wire Tip/Cap
(PCAPLUG8) x4

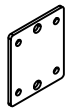

B5F -Bracket to Extend Height of Pole
(MPA15-E152) x1

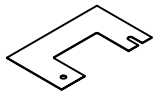

B5G -Ceiling Plate
(MPA15-2666) x2

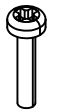

B5H -#8-32 x3/4 QD RD HD Screw
(E01-0544) x2



B5I -4 Prong Tee Nut
(E03-1152) x2

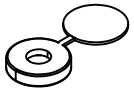

B5J -Snap Cap
(FM315-902) x2



B5K - SD_#8-18_0.750_
ZN_PN_QD *RR
(E01-0072) x 2



B5L - 1/4"-20 Nut
(E03-0254) x 2
(for X01-4349\M)



B5M - Grip Washer, 1/4"
(FW1/4) x 2
(for X01-4349\M)

CONNECT BRACKET ASSEMBLY (STANDARD)

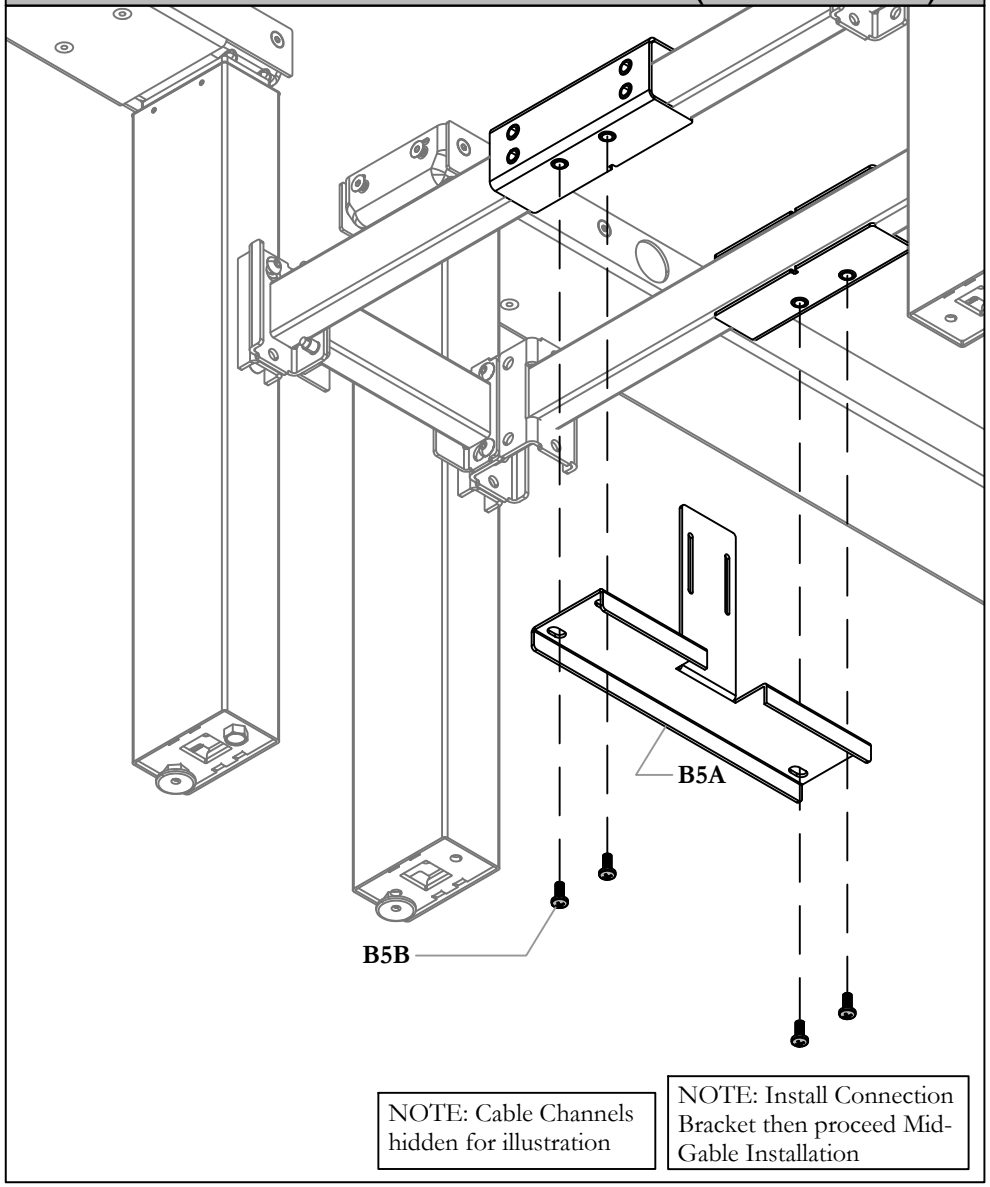

STEP 1a: Install Connecting Bracket (b5a) to the underside of the Stretch Bar using provided Screws (B5B).

ATTACH LOWER BODY (STANDARD)

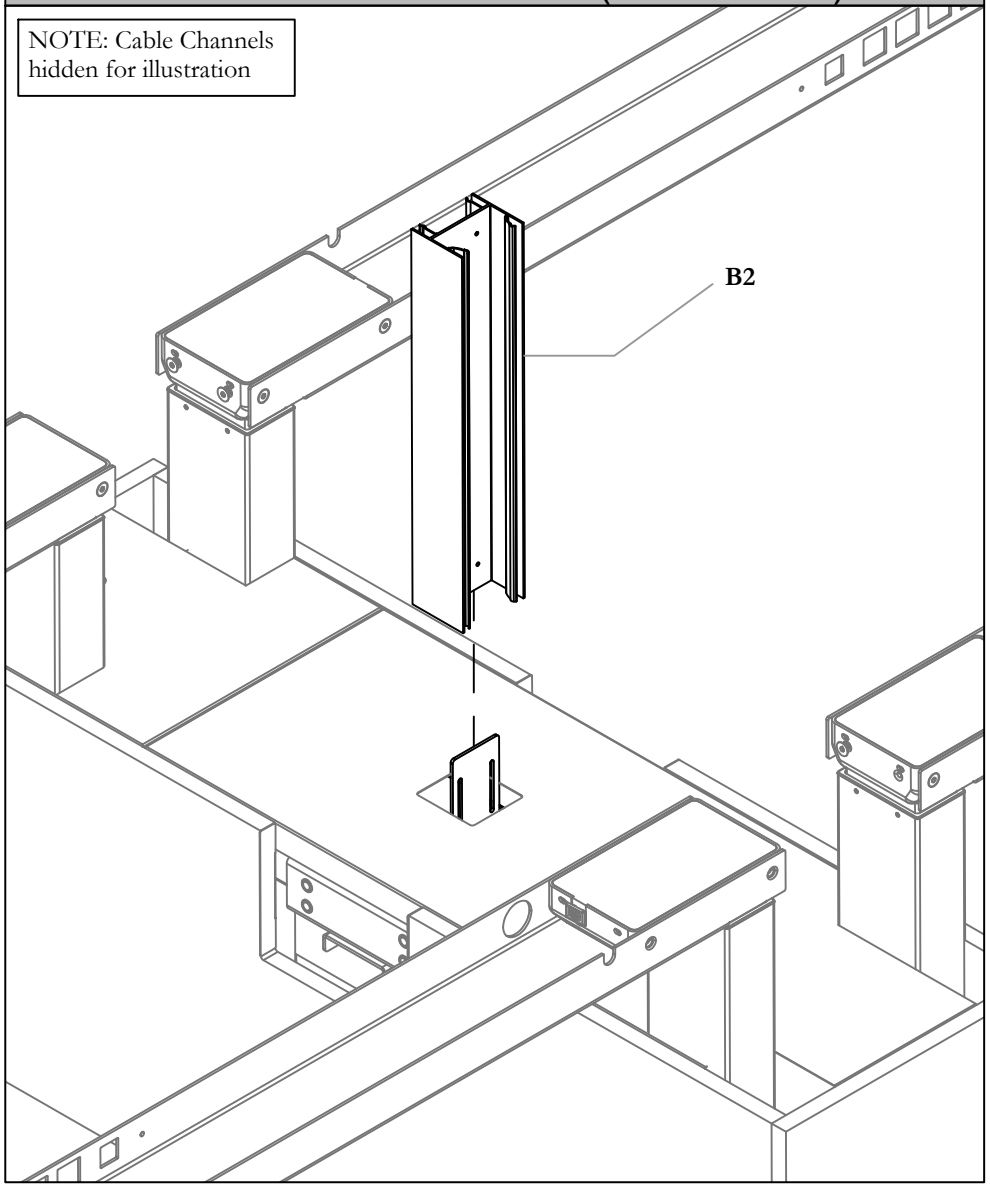

STEP 2a: After installing Mid-Gable, attach and align Lower Power Pole to Connecting Bracket as shown

MOUNT CONNECTING BRACKET (SINGLE SIDED)

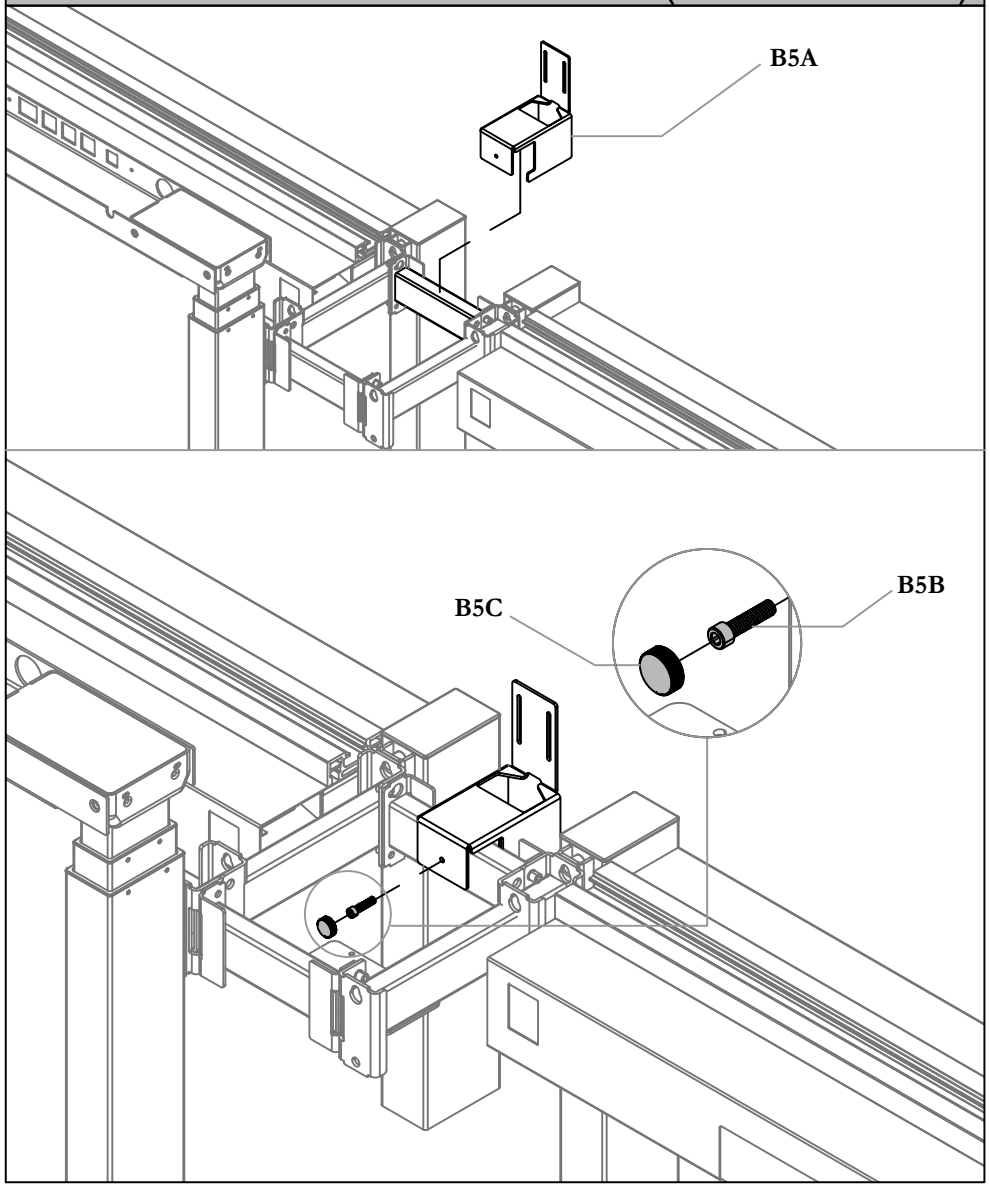

STEP 1b: Install Mounting Bracket (B5A) on the Frame Link. Secure it by fastening the Thumb Screw (B5B, B5C).

MOUNT CONNECTING BRACKET (SINGLE SIDED)

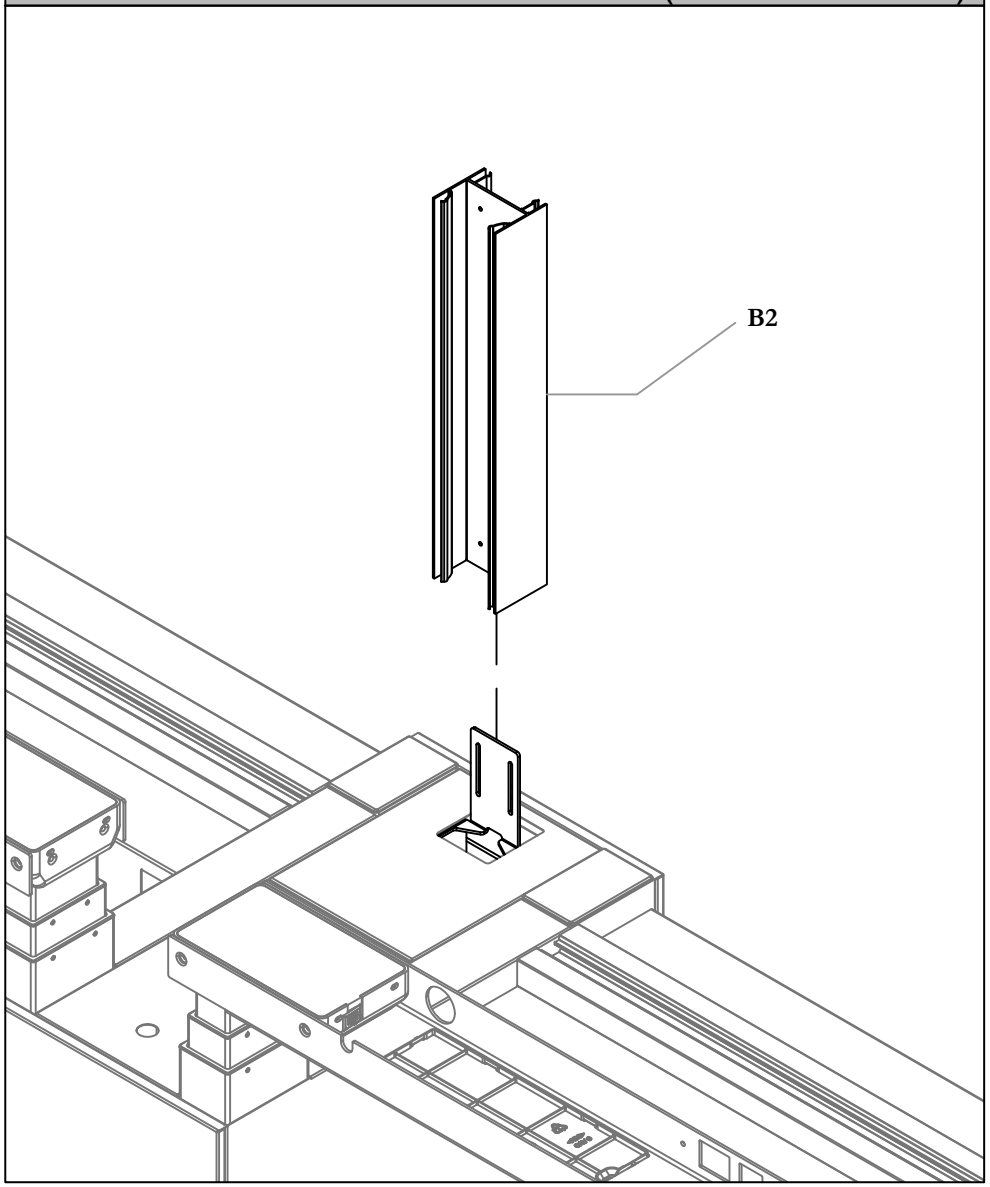

STEP 2b: After installing Mid-Gable, attach and align Lower Power Pole Body (B2) to Connecting Bracket as shown.

SECURE BOTTOM POWER POLE BODY

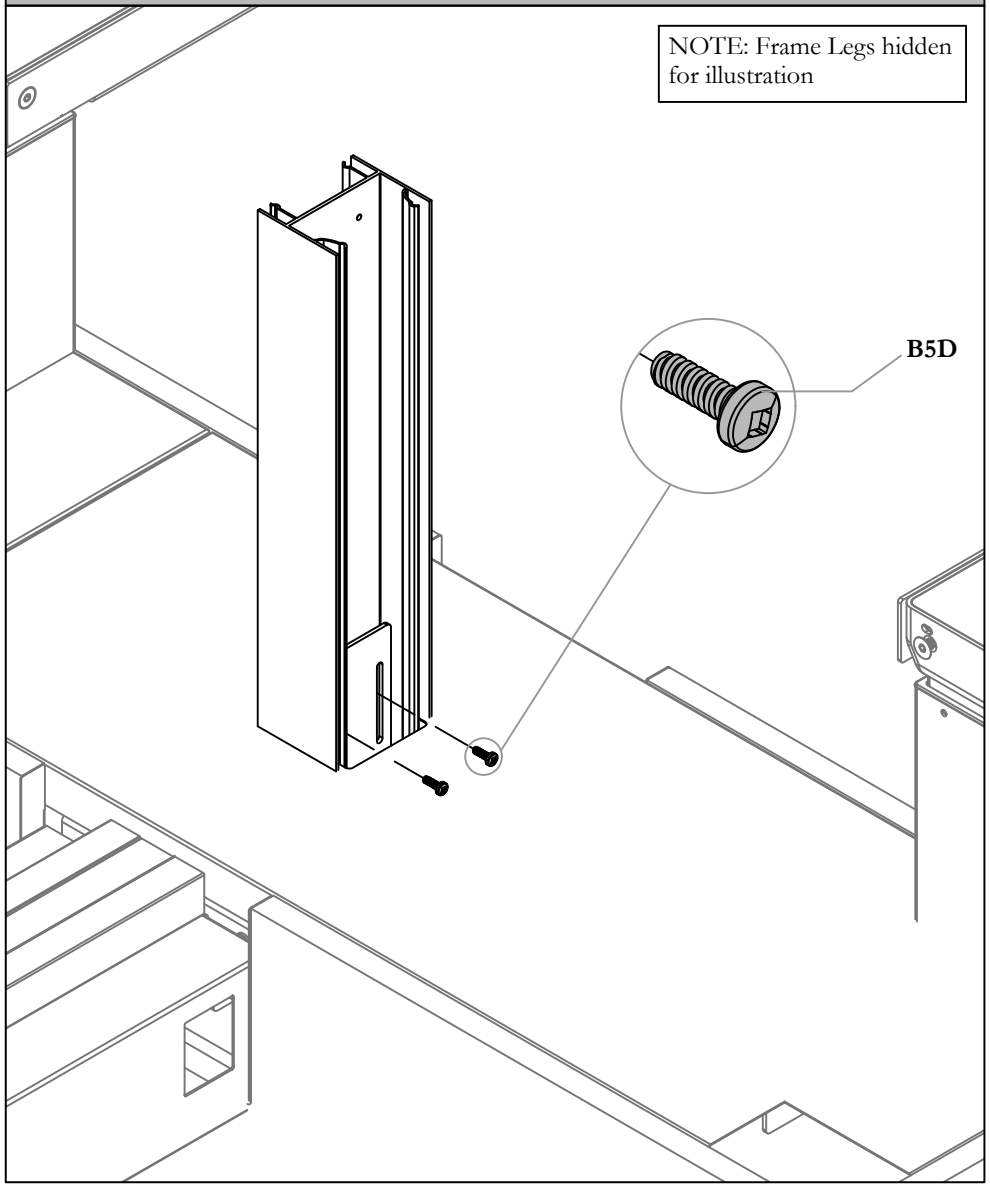

STEP 3: Fasten Bracket to Lower Power Pole Body using provided Screws (B5D).

CEILING CUT OUT

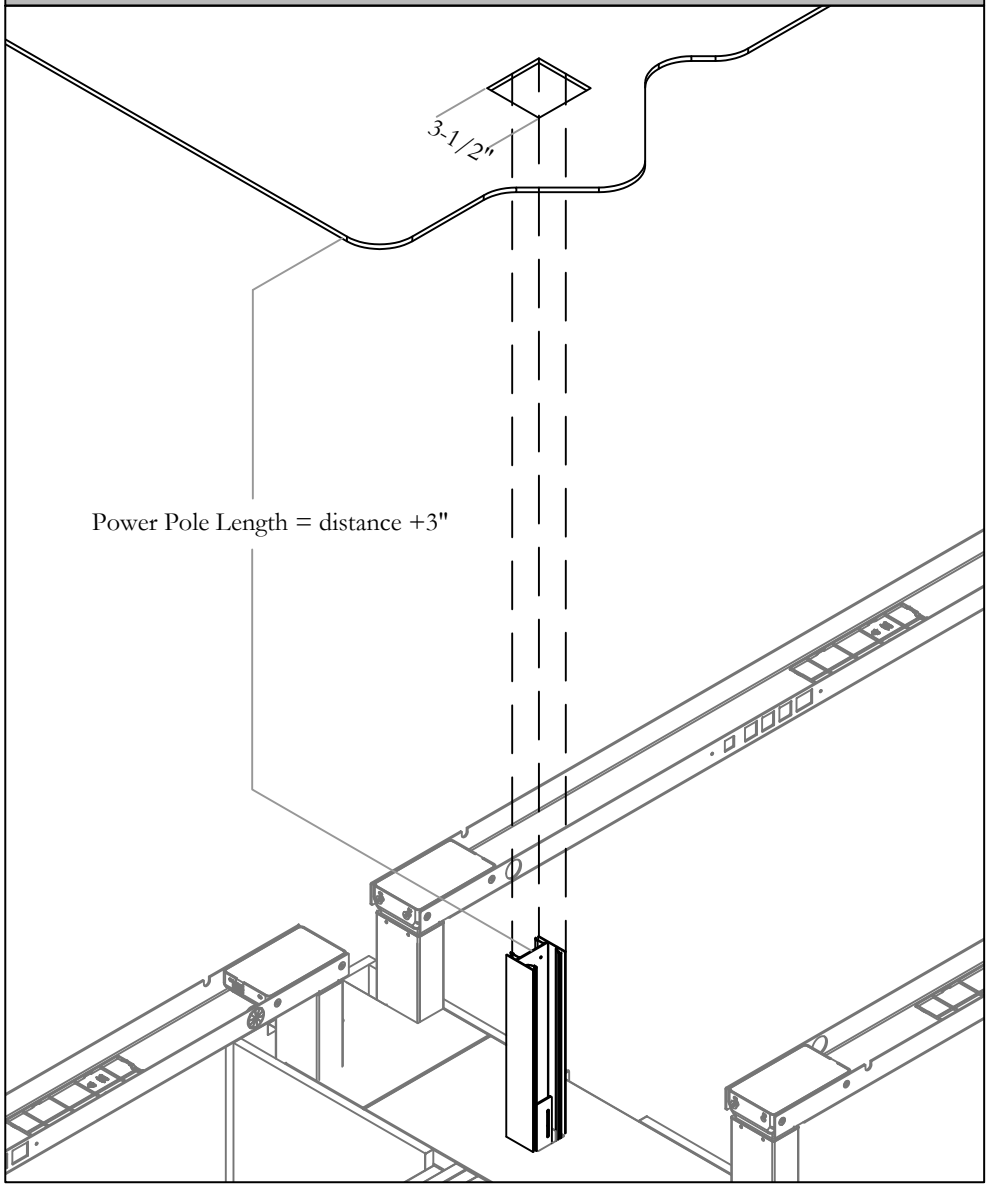

STEP 4: Mark Power Pole position on the ceiling using Plum Bob line. Cut 3-1/2" x3-1/2" opening. Measure Distance from top of the Lower Power Pole Body to the Ceiling. Add approx. 3" to that dimension and cut Power Pole Cover to that measurement.

INSTALL UPPER POWER POLE BODY

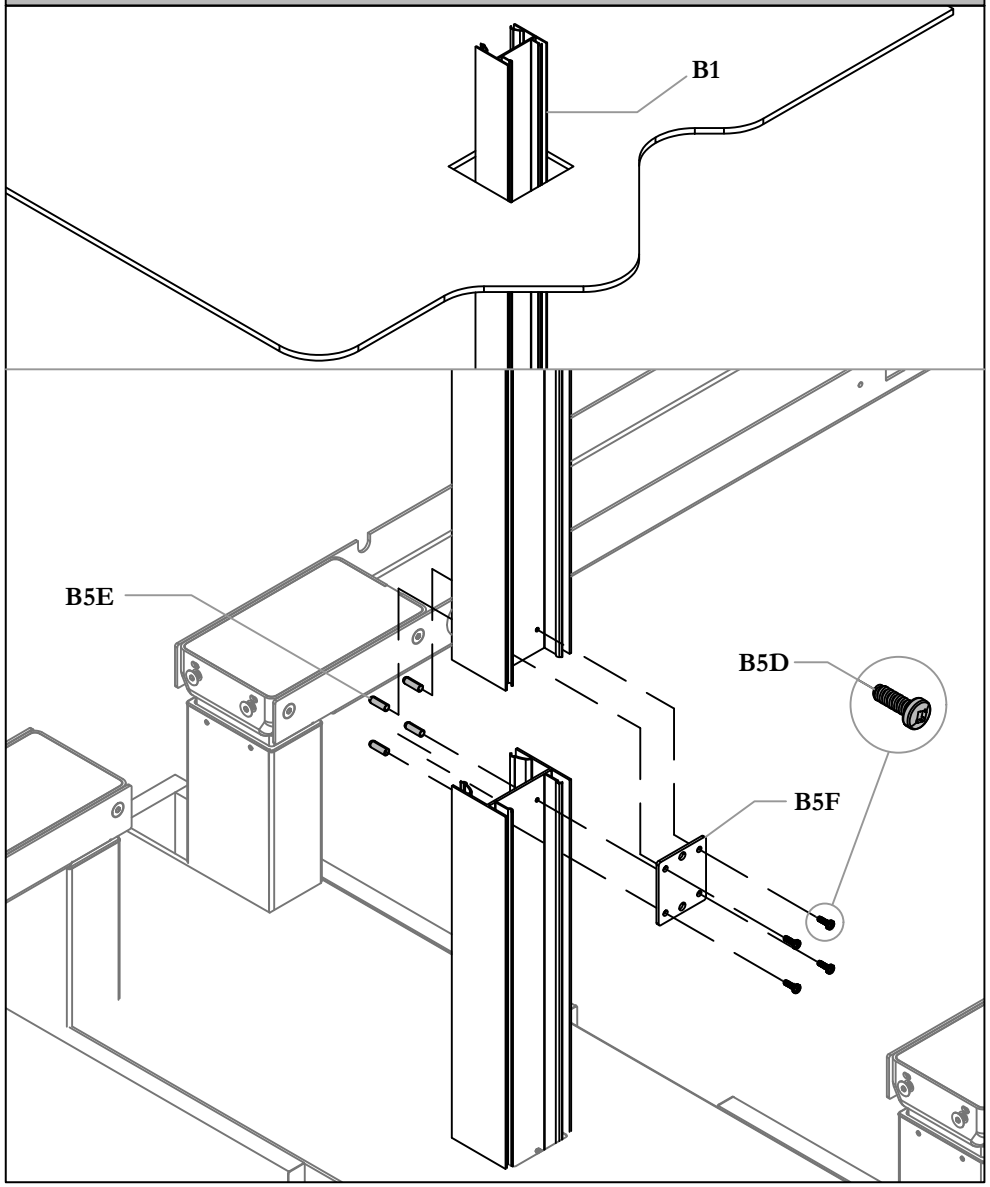

STEP 5: Insert Upper Power Pole Body (B1) inside Ceiling Cut-Out (Uncut edge down). Drop Power Pole Upper Body on the Top of Lower Body and connect them together using Connection Plate (B5F) and Screws (B5D) with Caps (B5E) on other side of pole.

CEILING FEED ASSEMBLY

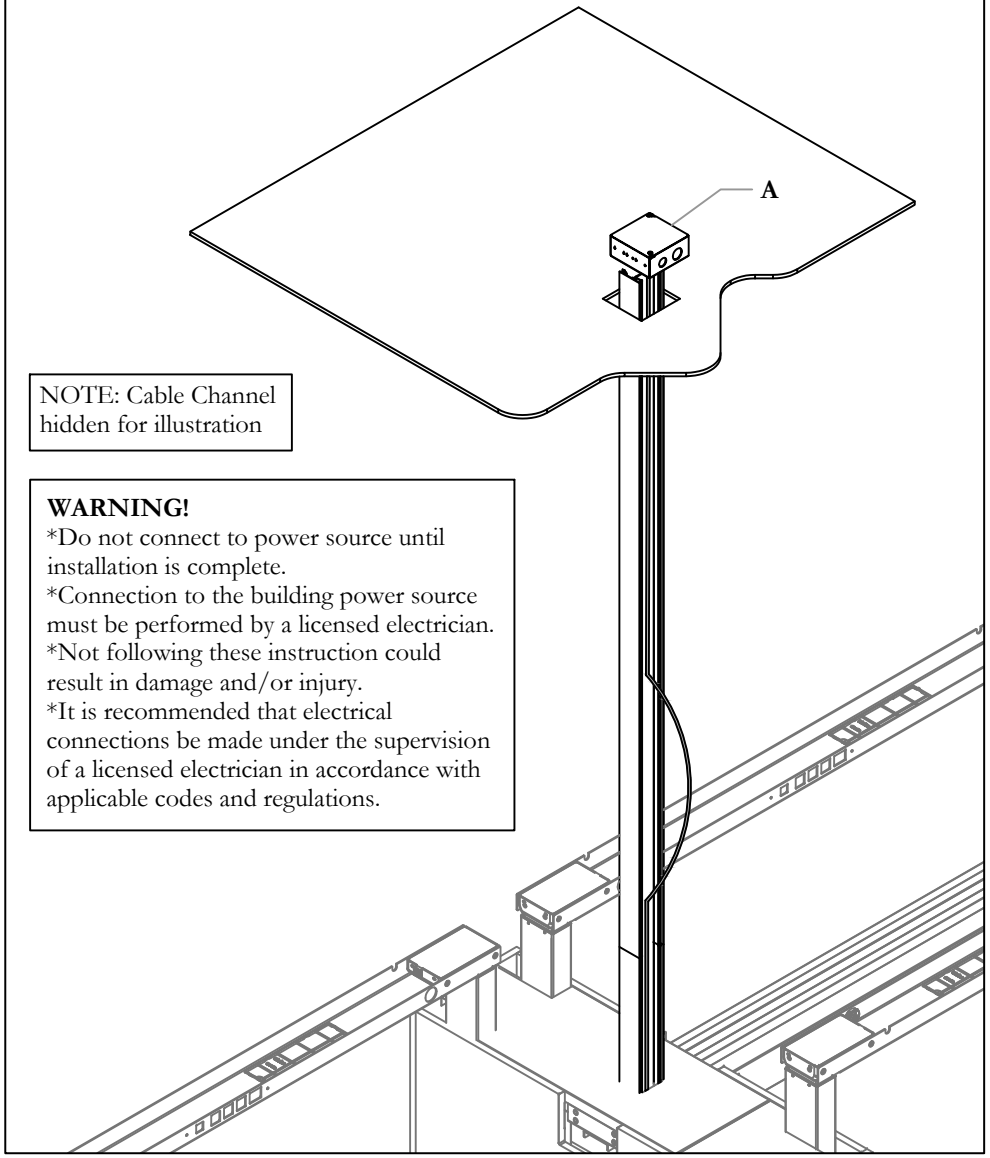

NOTE: Cable Channel hidden for illustration

WARNING!
*Do not connect to power source until installation is complete.
*Connection to the building power source must be performed by a licensed electrician.
*Not following these instruction could result in damage and/or injury.
*It is recommended that electrical connections be made under the supervision of a licensed electrician in accordance with applicable codes and regulations.

STEP 6: Drop Ceiling Feed (A) cable down through ceiling Cut-out down along the Power Pole. Slide junction box Inside the Power Pole Extrusion

CABLE MANAGEMENT

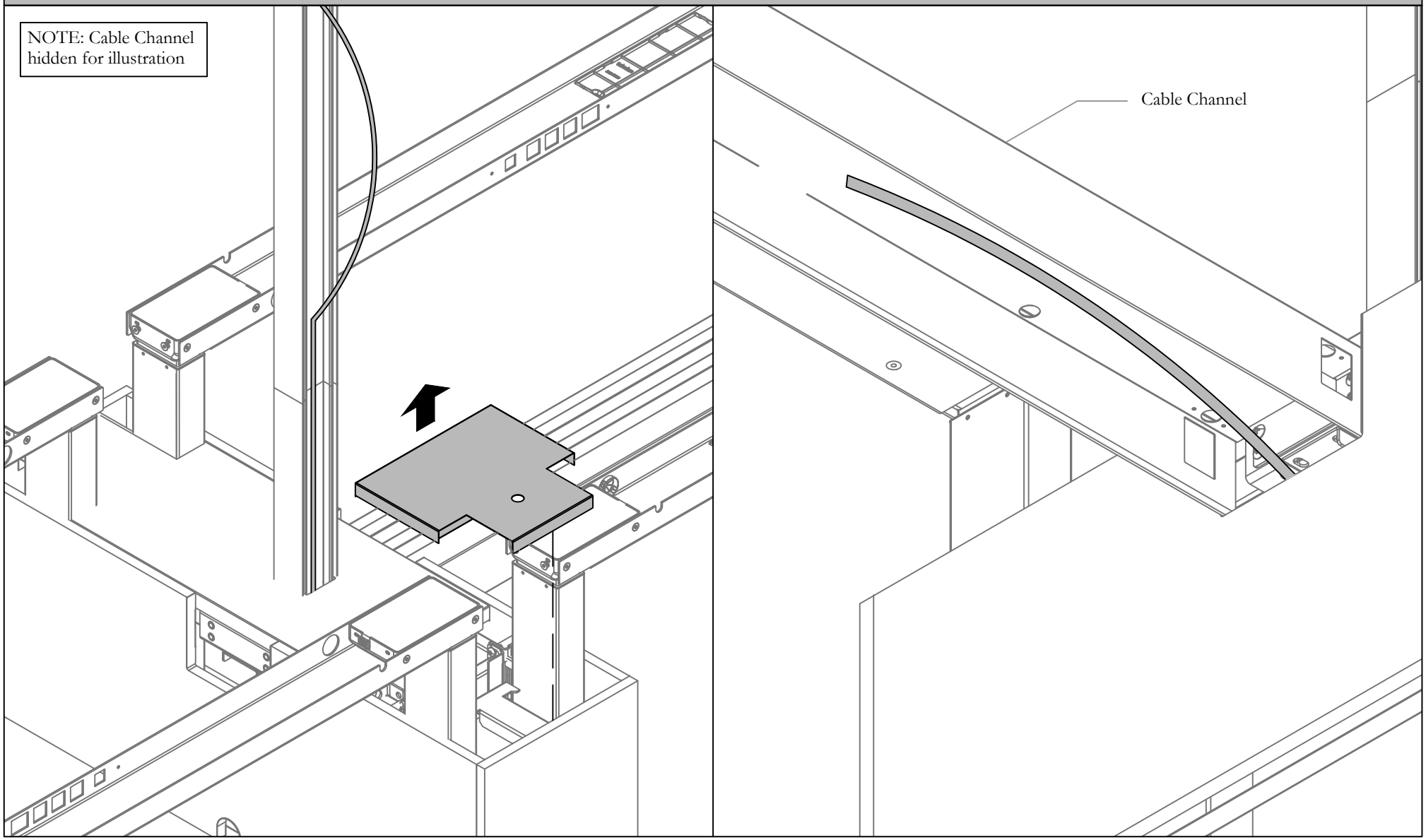

STEP 7: Open Mid-Gable Top Cover and route Ceiling Feed Cable underside Cable Channel

WARNING! *Do not connect to power source until installation is complete. *Connection to the building power source must be performed by a licensed electrician.*Not following these instruction could result in damage and/or injury. *It is recommended that electrical connections be made under the supervision of a licensed electrician in accordance with applicable codes and regulations.

ATTACH LOWER COVER

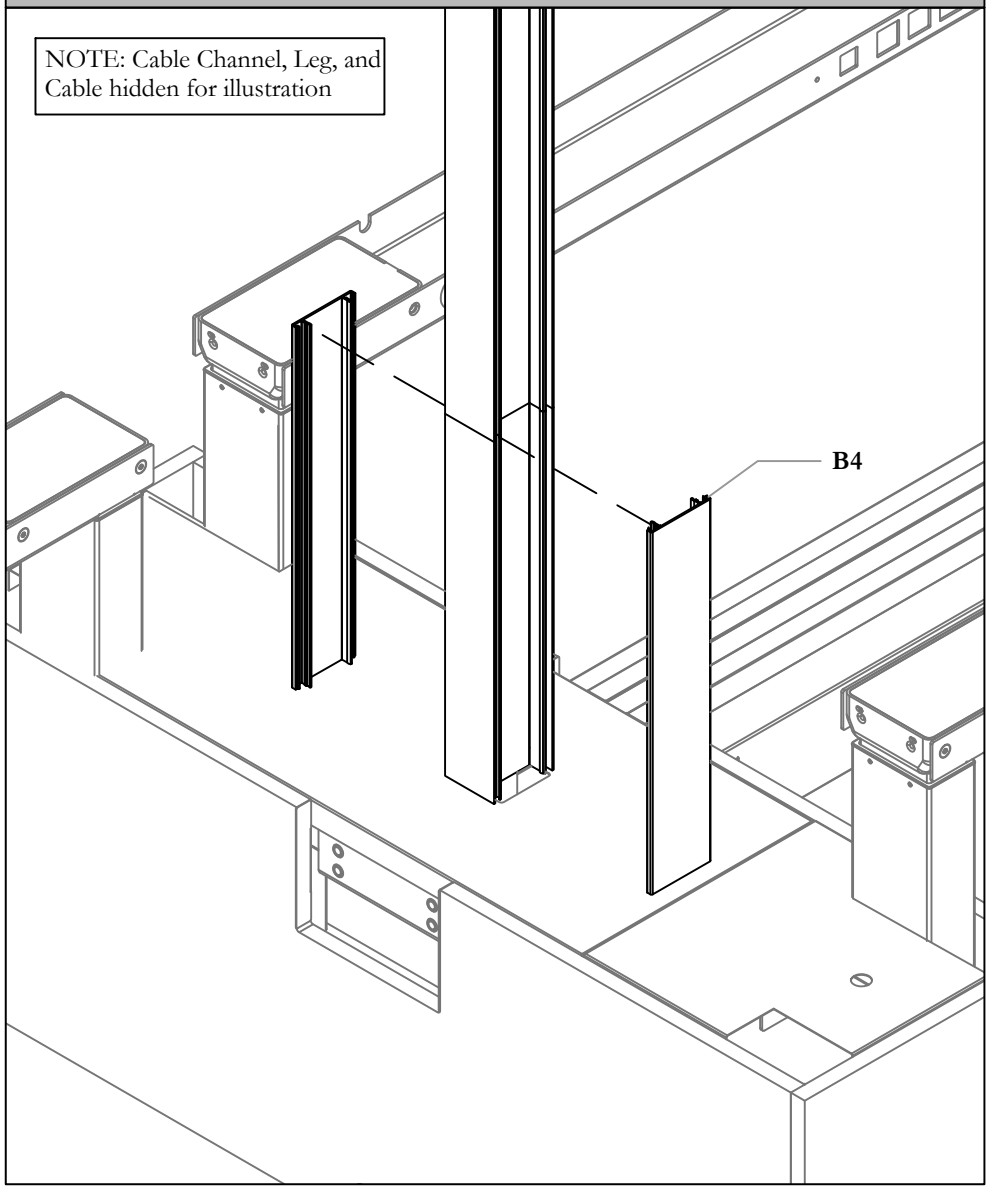

STEP 8: Tuck cable and attach Lower Power Pole Covers (B4) by engaging them into Lower Power Pole Body.

ATTACH UPPER COVER

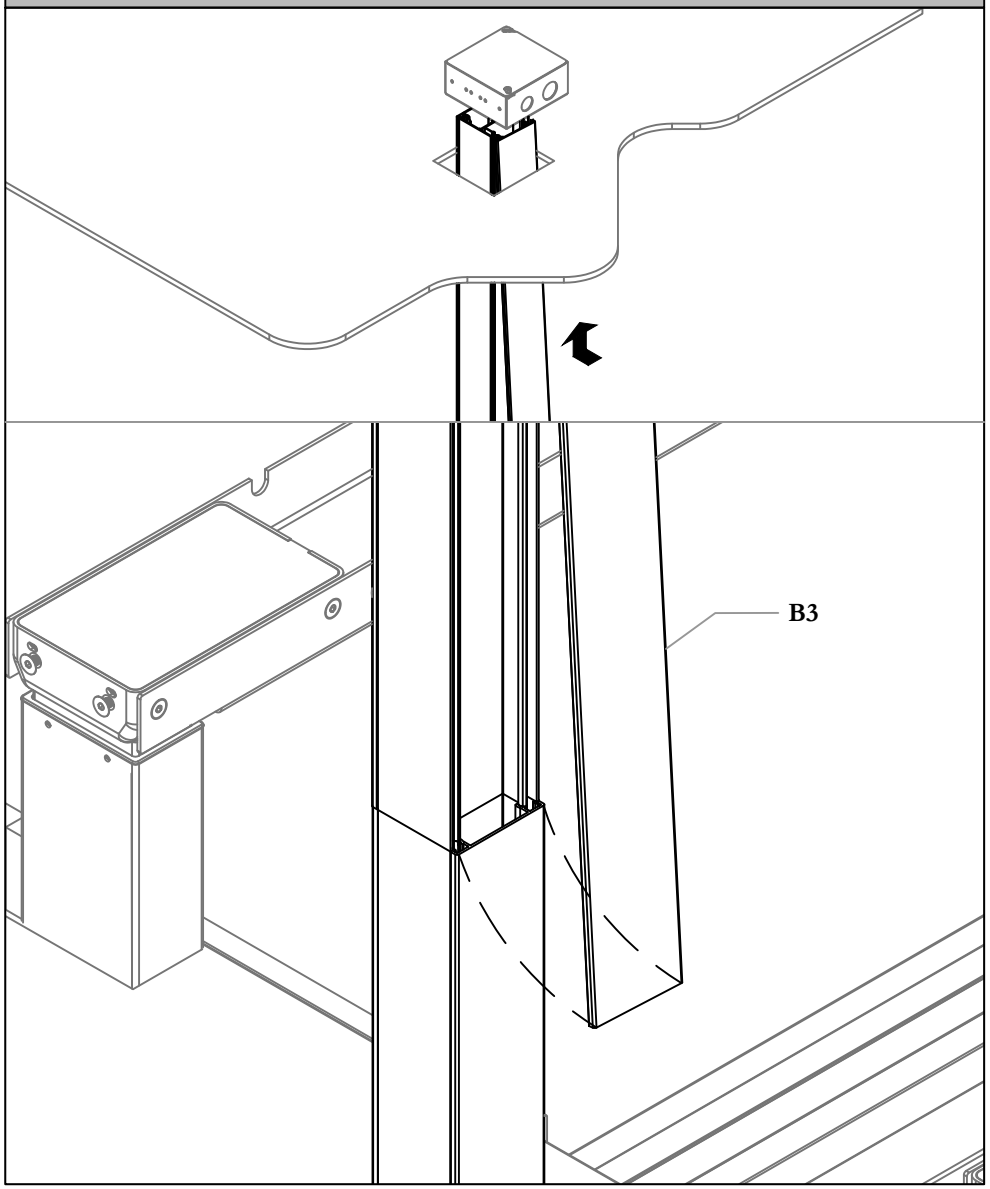

STEP 9: Insert Upper Power Pole Covers (B3) inside ceiling cut-out then engage into Upper Power Pole Body.

WARNING! *Do not connect to power source until installation is complete. *Connection to the building power source must be performed by a licensed electrician.*Not following these instruction could result in damage and/or injury. *It is recommended that electrical connections be made under the supervision of a licensed electrician in accordance with applicable codes and regulations.

ATTACH CEILING PLATE THEN DRILL HOLES

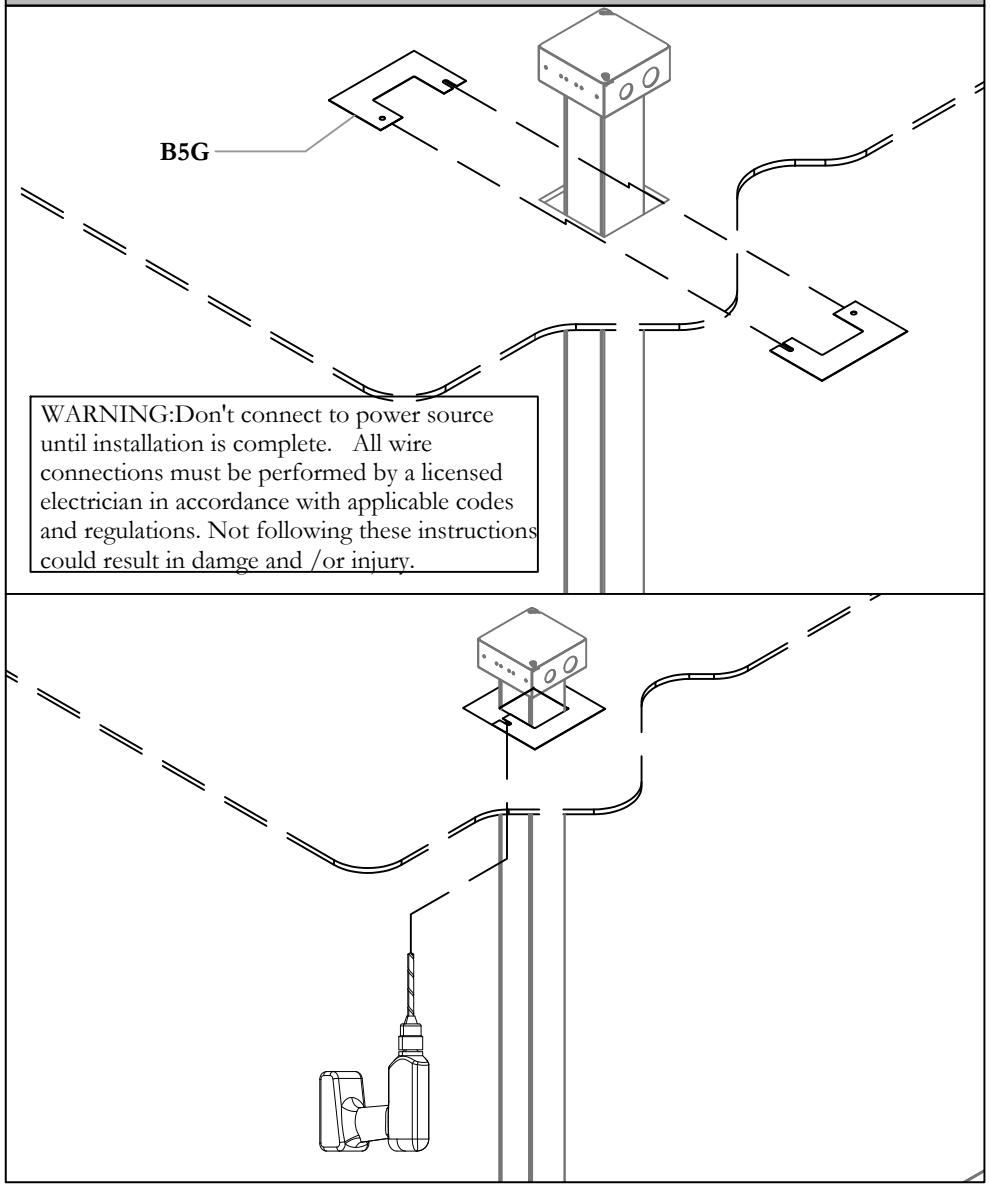

STEP 10: Attach Ceiling Plates (B5G) to Power Pole under the Ceiling. Drill holes for T-nuts using Ceiling Plates as a template to determine holes location.

SECURE PLATES

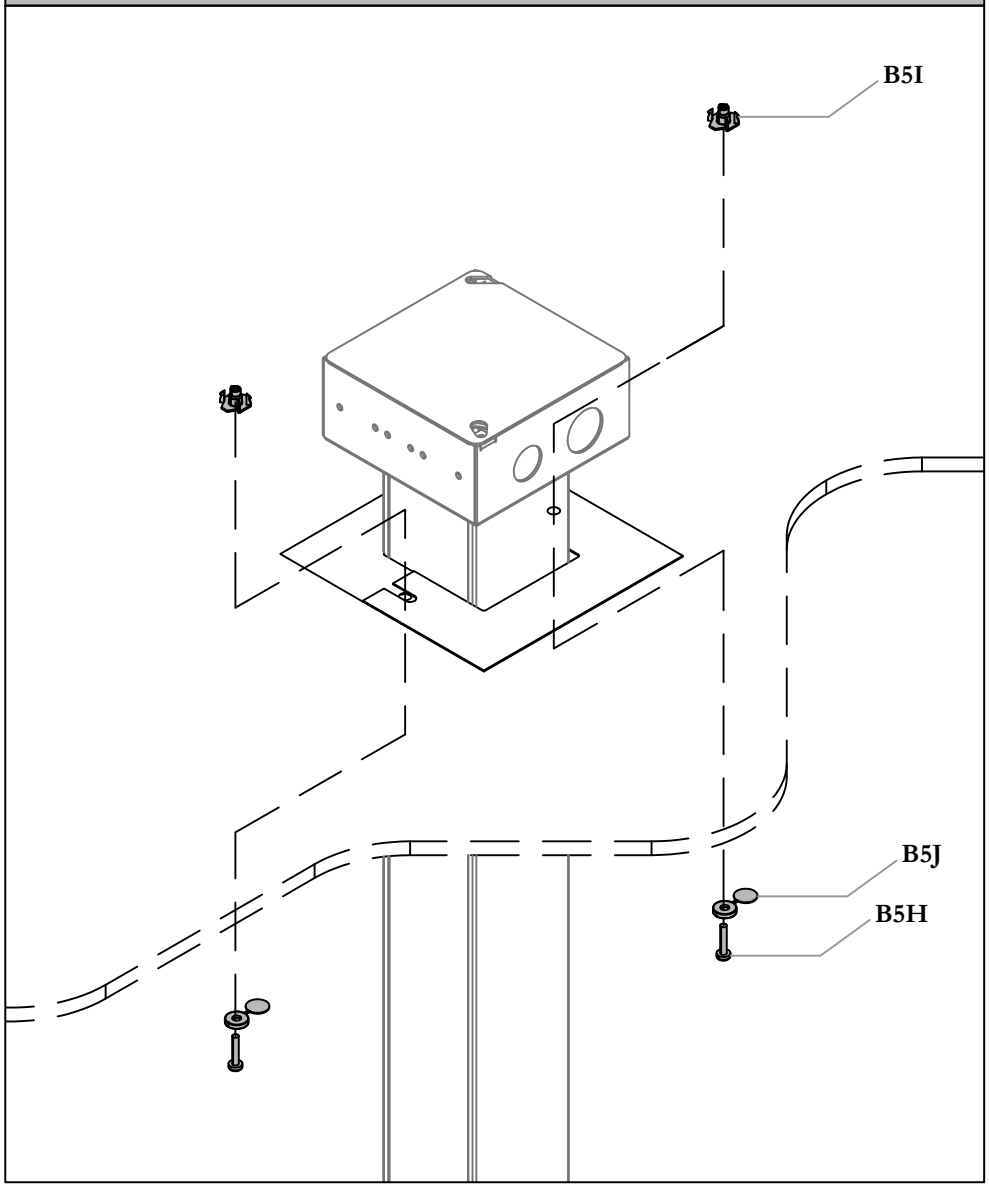

STEP 11: Push T-nuts (B5I) inside holes from the Top of the ceiling tile. Wrap cover plates around the Power Pole and fasten using Screws (B5H) and Snap Cap (B5J) provided.

WARNING! *Do not connect to power source until installation is complete. *Connection to the building power source must be performed by a licensed electrician.*Not following these instruction could result in damage and/or injury. *It is recommended that electrical connections be made under the supervision of a licensed electrician in accordance with applicable codes and regulations.

Power Conservation System (HNBEPC)

Sensor Wire Color:
Green: Circuit 1
Blue: Circuit 2

NOTE:
1. Sensor cables are identified by different colors.
2. Ensure all cables linked to one run are all the same color. (Maximum 4 sensors per run)
3. Controlled Receptacles for Circuit 1 can only be used in stations that have sensors connected to Circuit 1
4. Do not mix controlled receptacles for Circuits 1 and 2 in the same stations

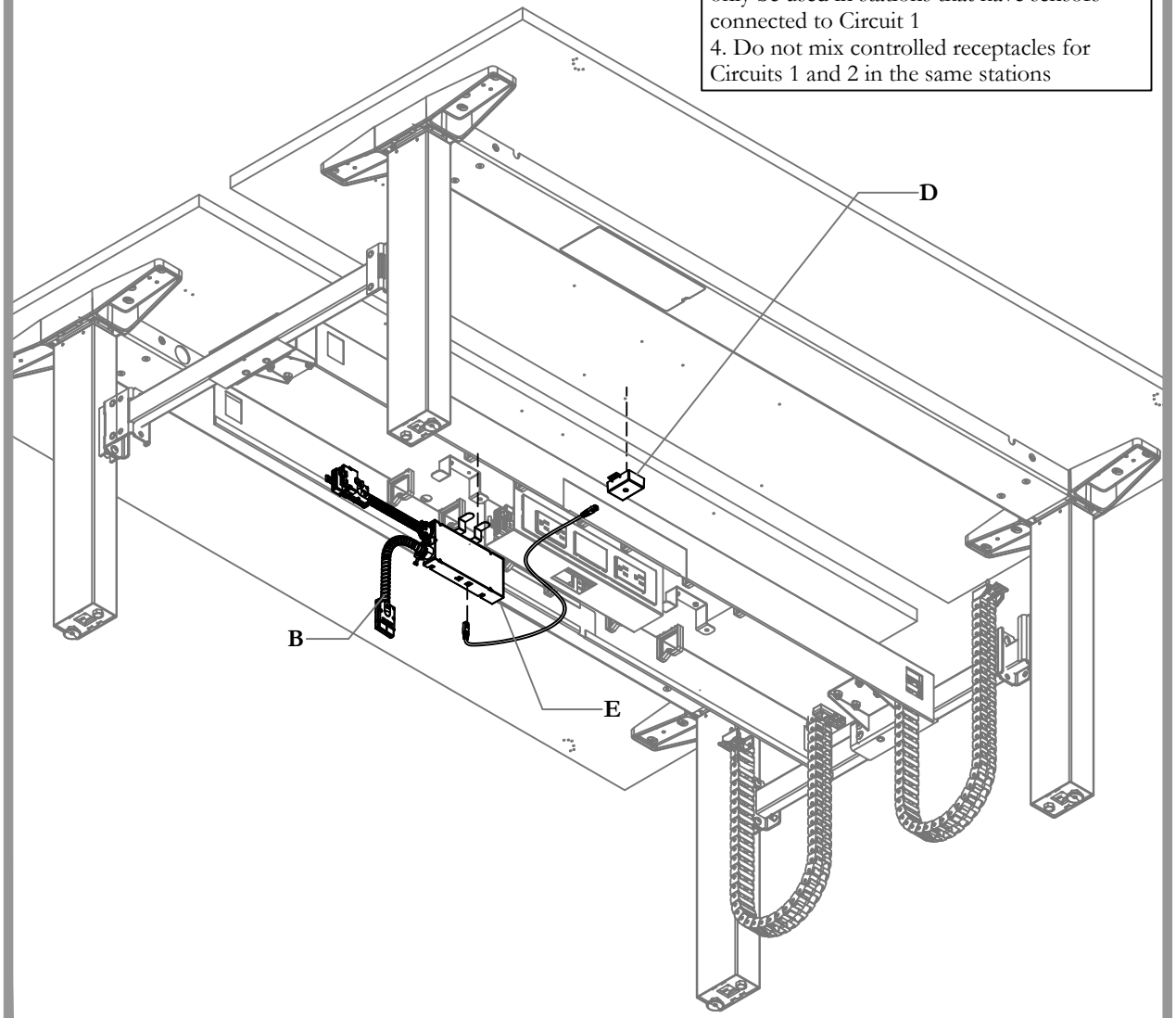

Part and Product Identification

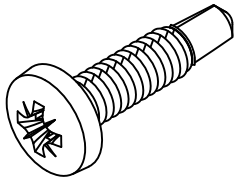

A - #8 x 3/4 Slf Tping Scrw
FS8x.075QPTEKS x4

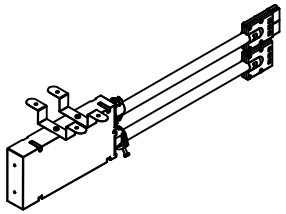

B - Control Box
Control Box-12.11 x1

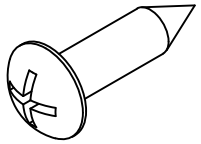

C - #8 x 3/4 Wood Screw
x Qnty Varies

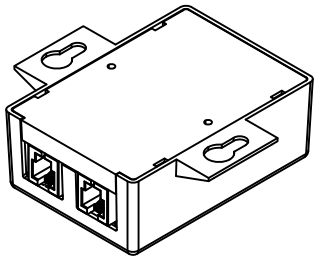

D - PIR Sensor
Sensor R01 x Qnty Varies

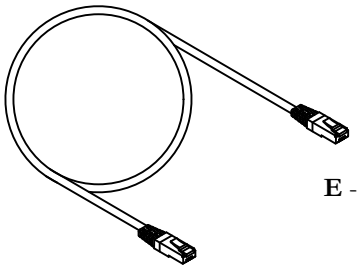

E - 12' CAT3 Cable
CAT3 Cable x Qnty Varies

INSTALL POWER CONSERVATION SYSTEM

NOTE: Only when 1 Power Conservation System Kit is specified per 2 stations

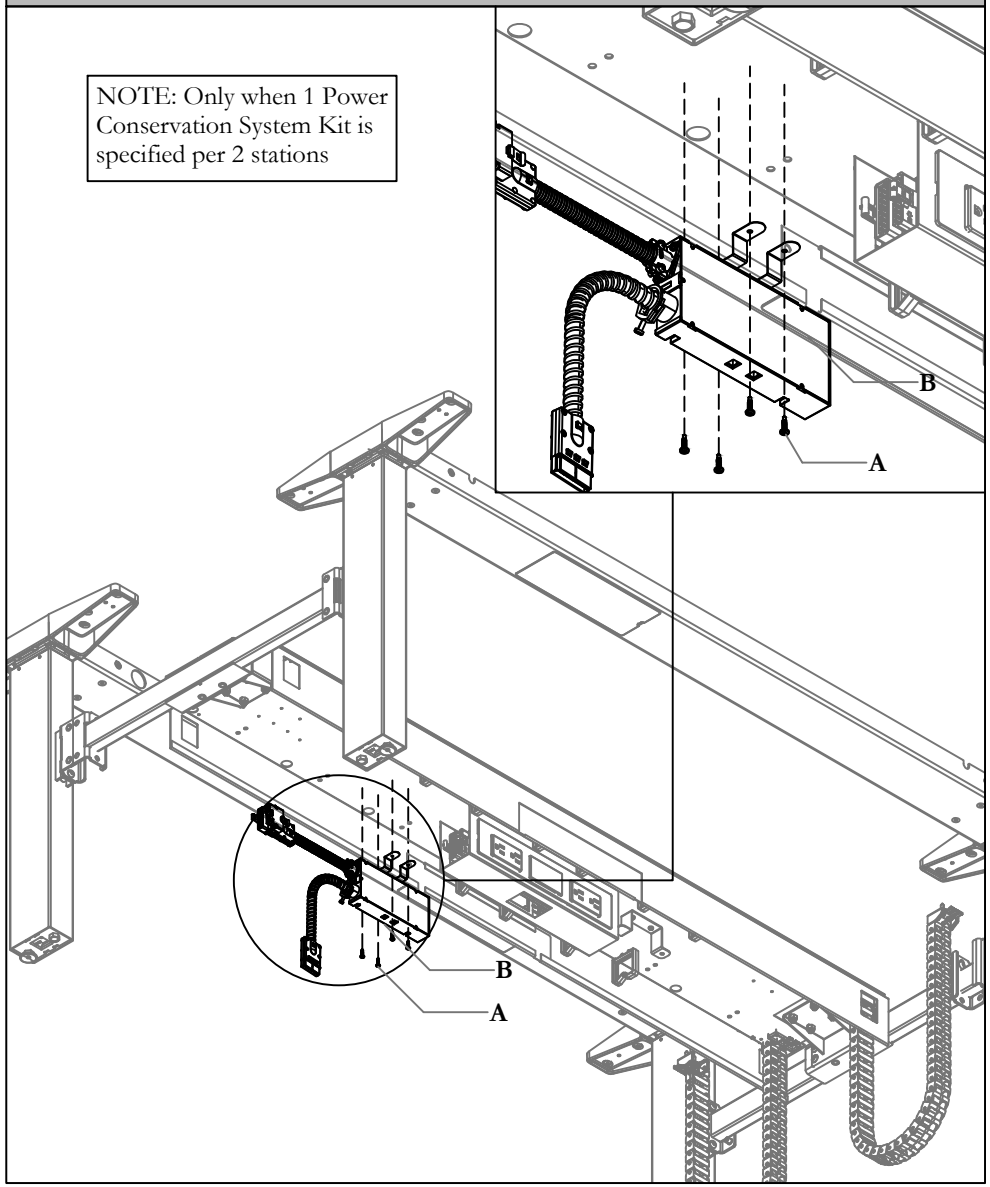

STEP 1: Install Power Conservation System beneath Cable Channel using Self Tapping Screws

CONNECT POWER CONSERVATION SYSTEM

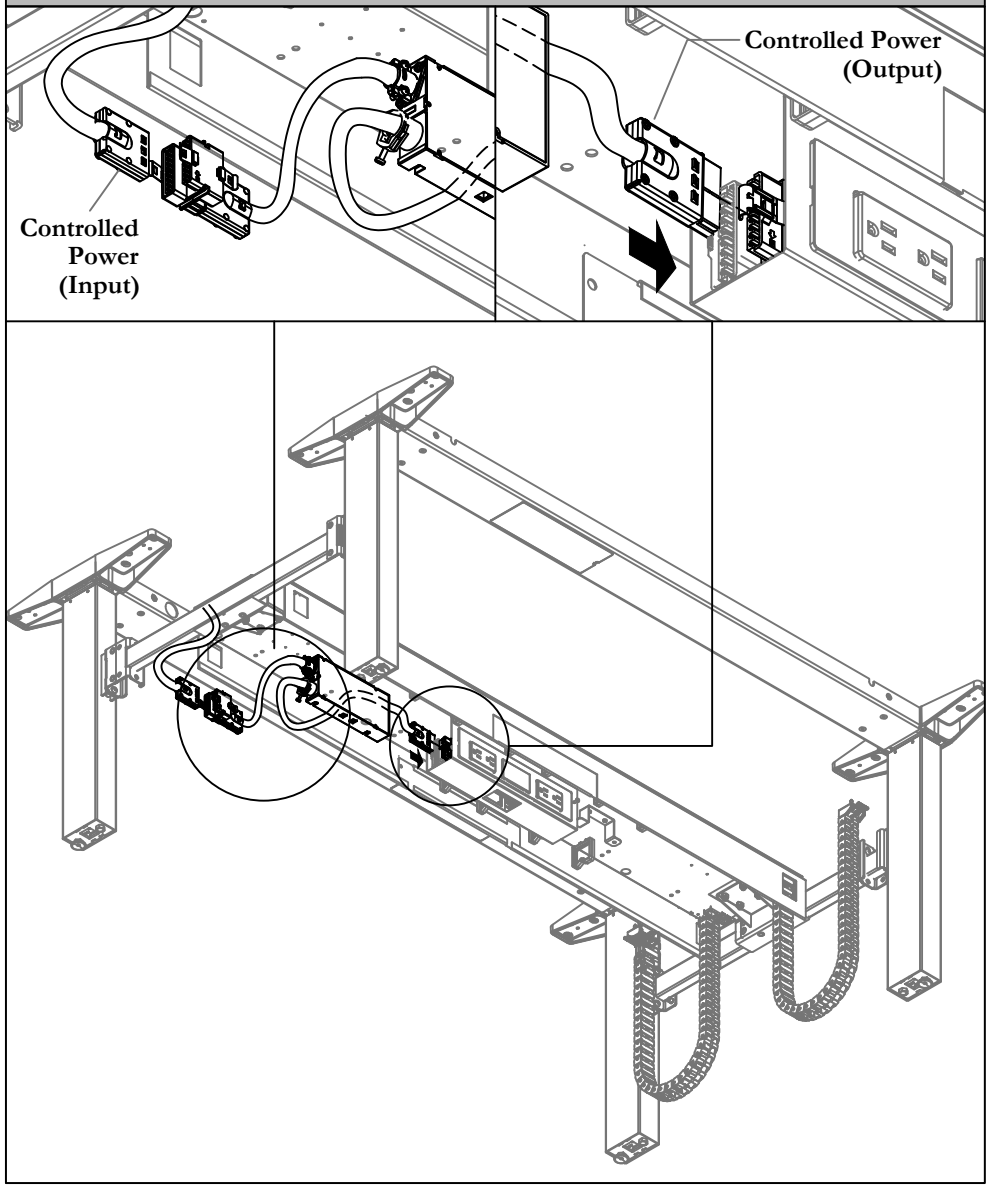

STEP 2: Connect Power Conservation System to Base Feed and Power Module

MOUNT WORKSURFACES

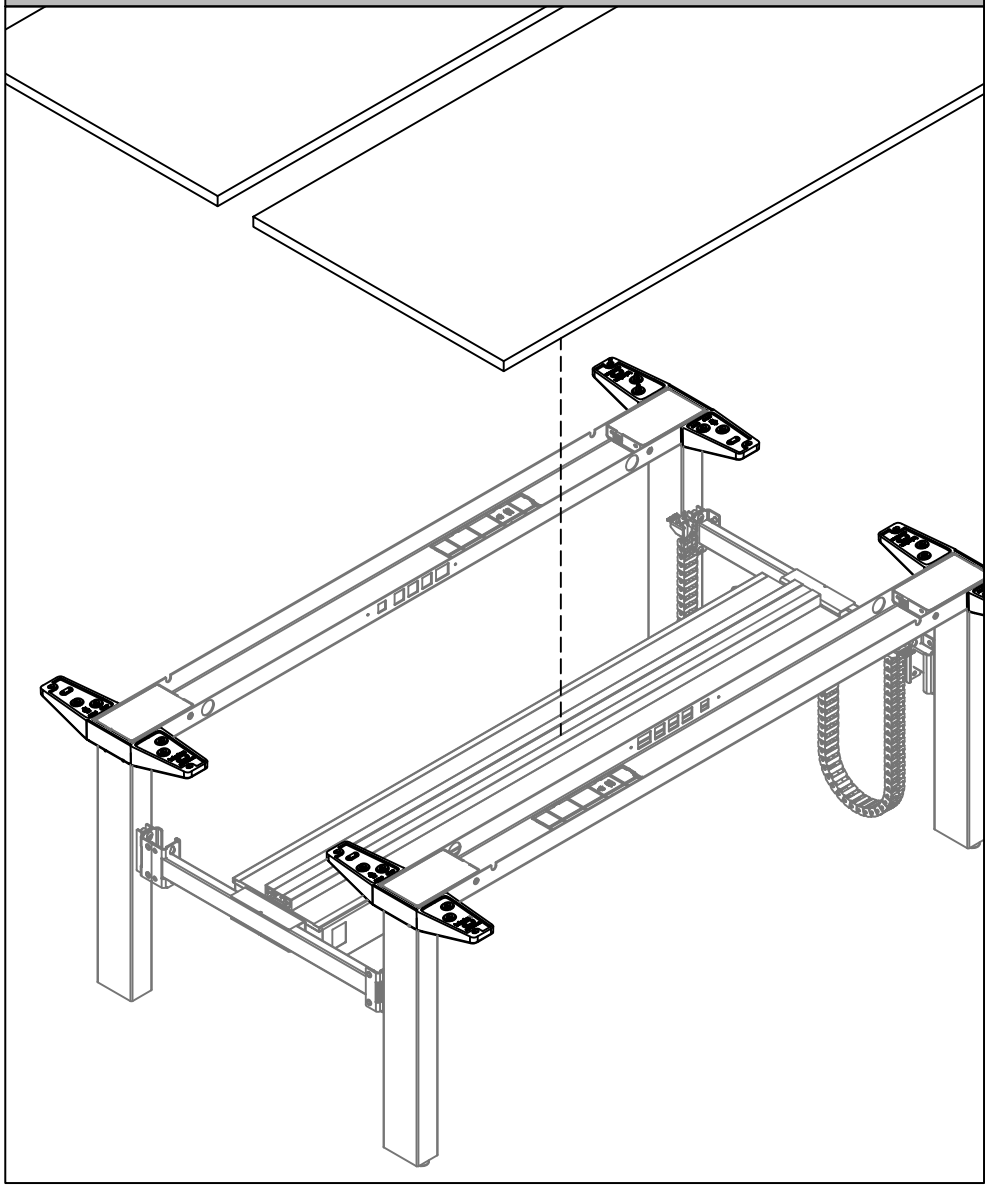

STEP 3: Mount Worksurfaces

MOUNT SENSORS

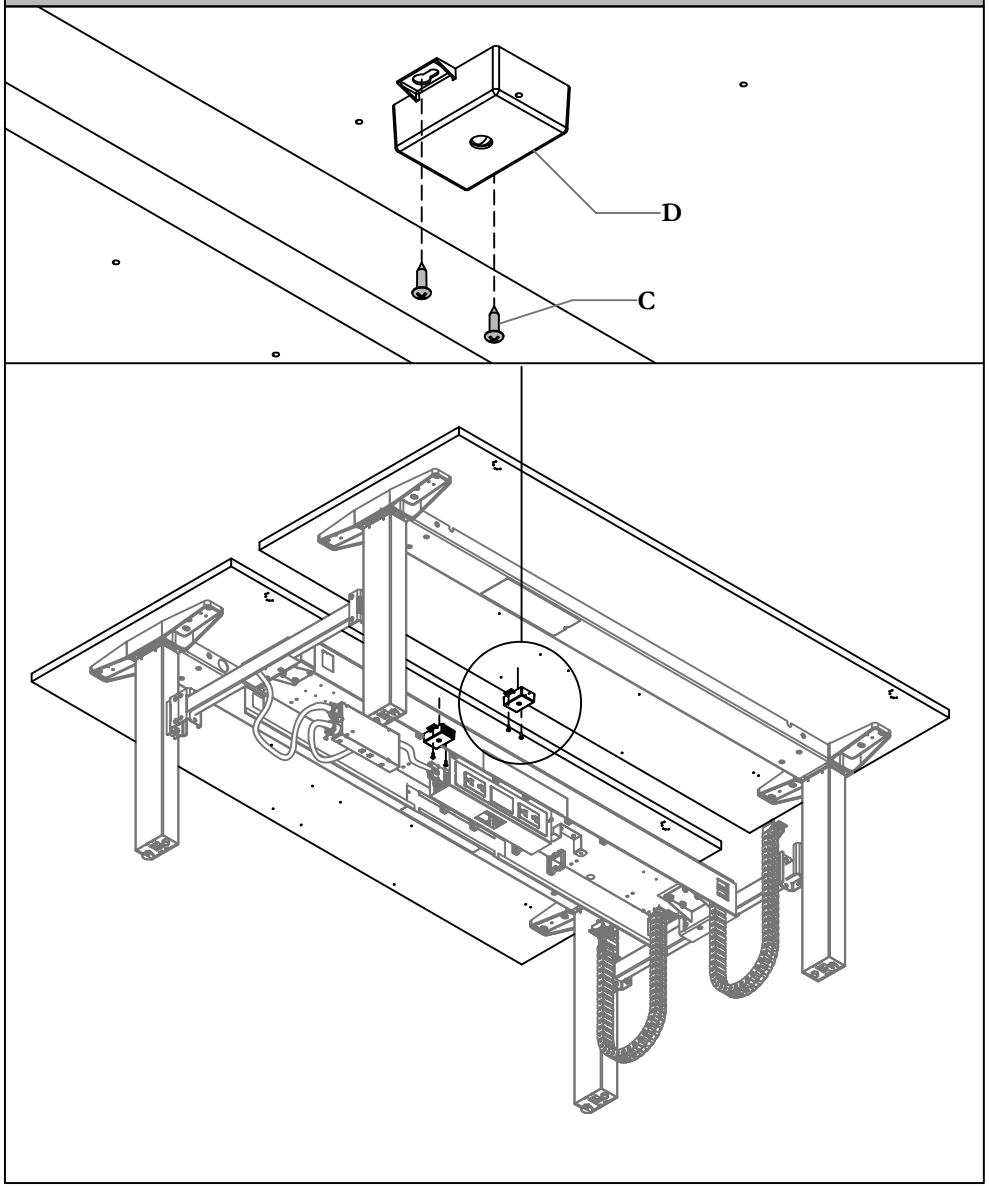

STEP 4: Mount Sensors using Wood Screws

DESCRIPTION

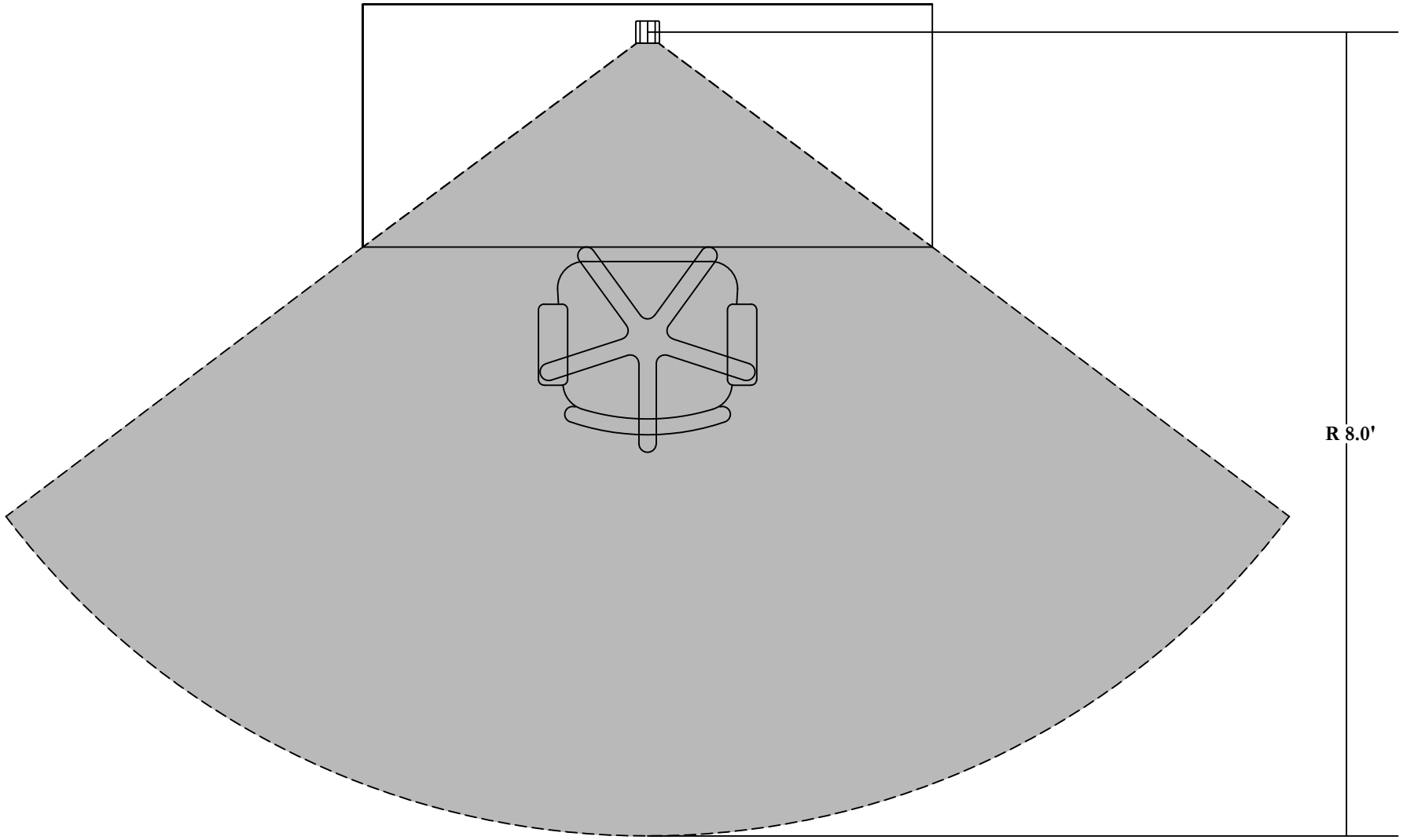

Note: Sensor placement will be based on location of User, Length of CAT3 Cable, and Desk Configuration

CONNECT SENSOR TO POWER CONSERVATION SYSTEM

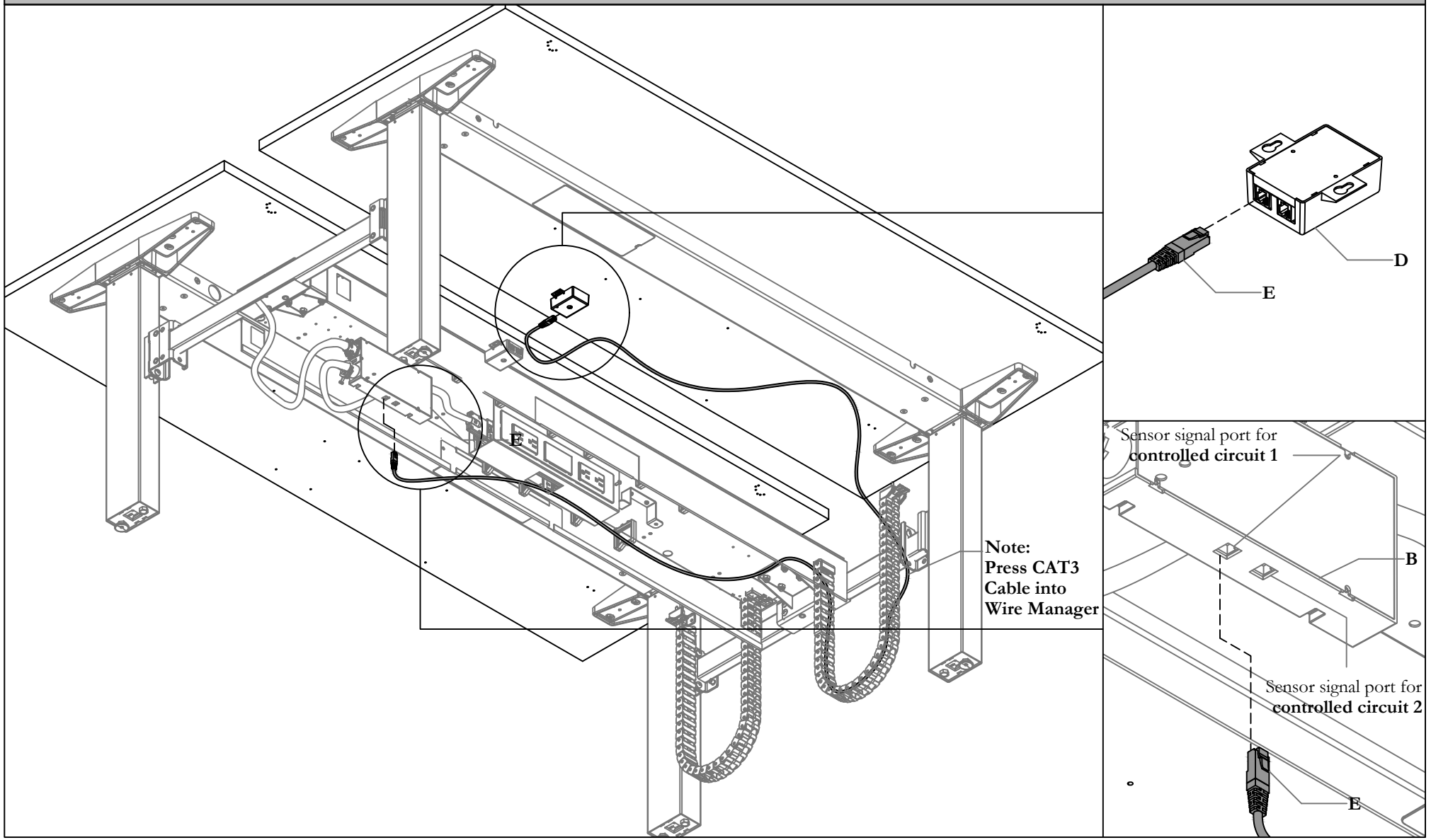

STEP 5: Connect Sensor to Sensor using CAT3 Cable

SENSOR GANGING

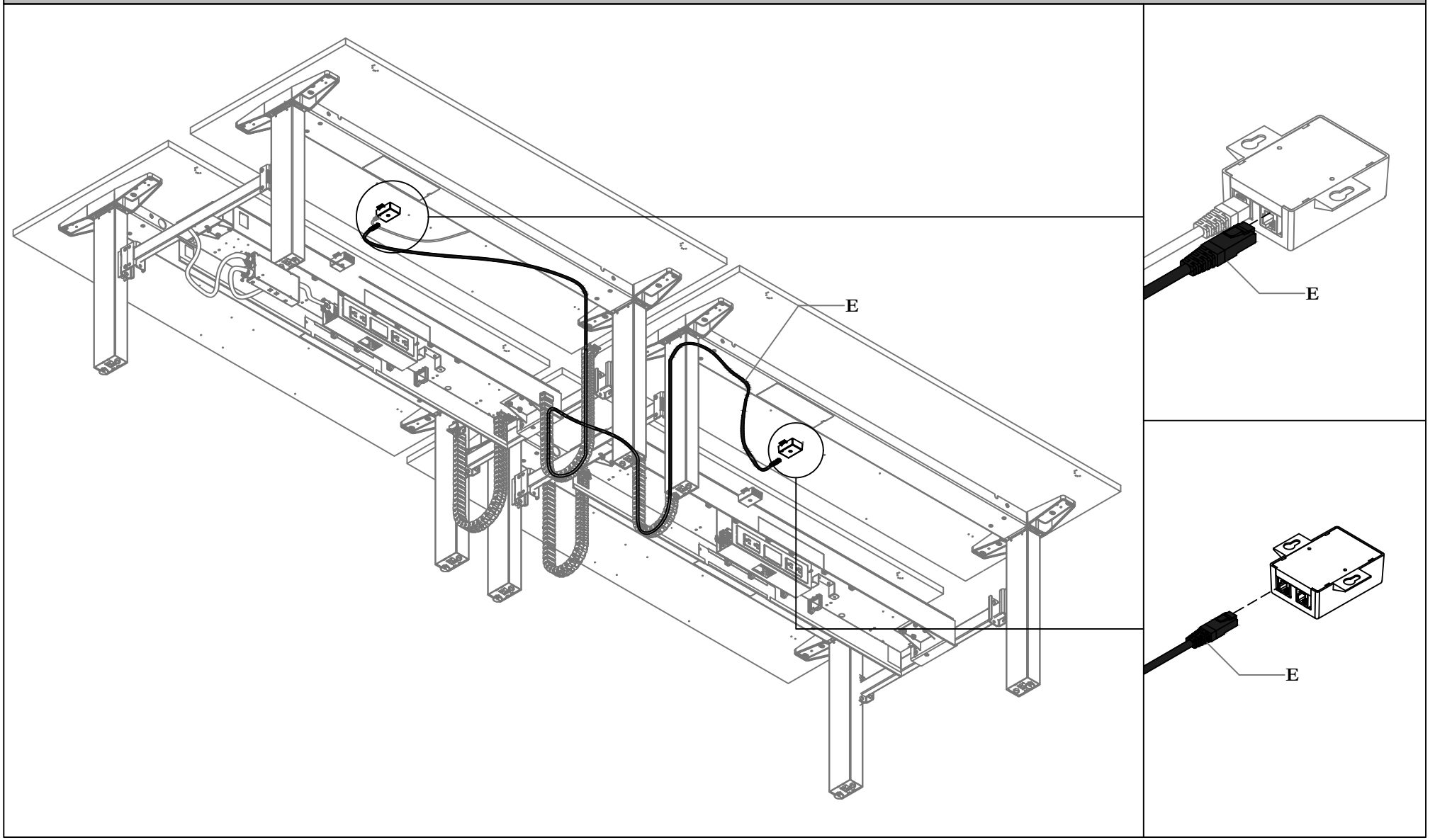

STEP 6: Connect Sensors together using CAT3 Cable

Navigate Power Pole 120 (HNBEPPT), Navigate Ceiling Feed (HNBECF)

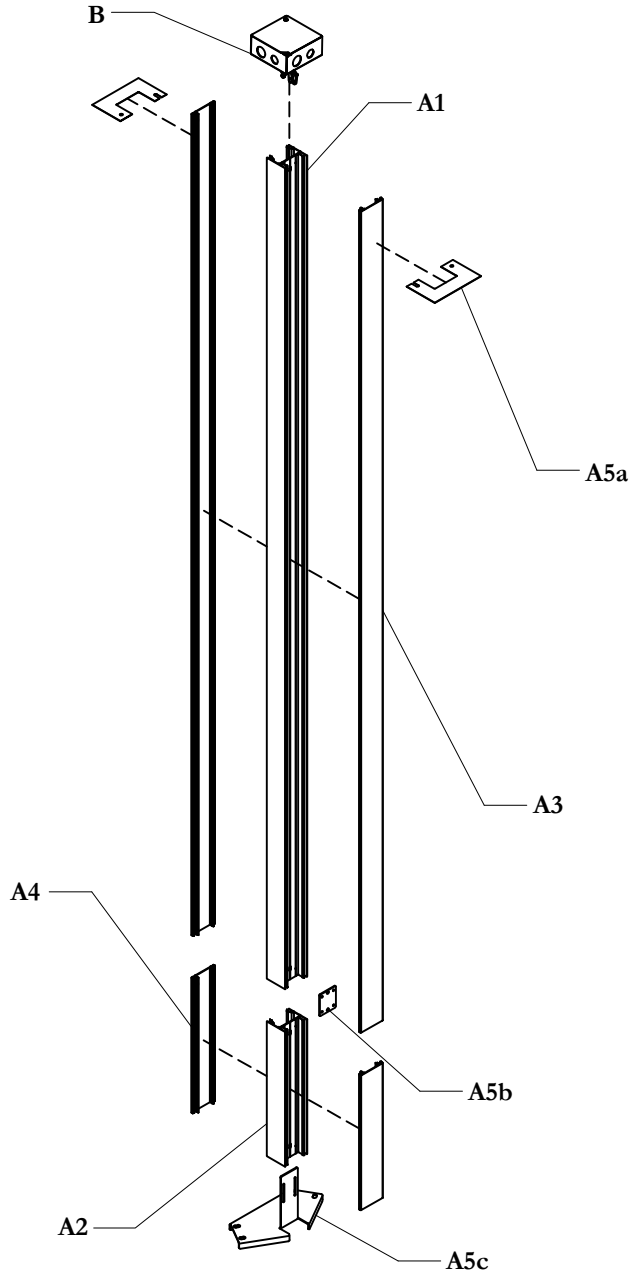

Part & Product Identification

A - Navigate Power Pole 120 (N09-8570) x1

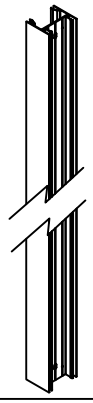

A1 - Upper Power Pole Body
(AEA21-0200) x1



A2 - Lower Power Pole Body
(AEA21-0200) x1

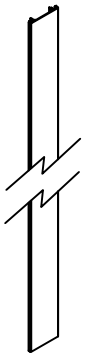

A3 - Upper Power Pole Cover Cap
(AEA23-E014) x2



A4 - Lower Power Pole Cover Cap
(AEA23-E014) x2

A5 - Hardware Kit for Navigate Height Adjustable Bench Power Pole (X01-4349T) x1

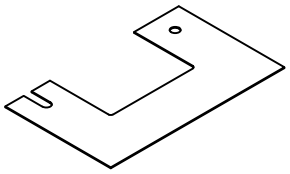

A5a - Ceiling Plate for EPQE
(MPA15-2666) x2

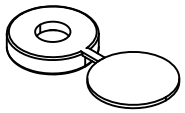

A5e - Snap Cap
(FM315-902) x2

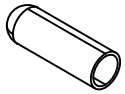

A5i - Plastic Wire Cap
(PCAPLUG8) x4

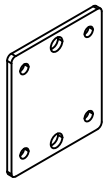

A5b - Bracket to Extend Height of Leverage Power Pole
(MPA15-E152) x1

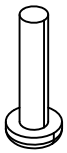

A5f - 8-32 x 0.750 Screw
(E01-0544) x2

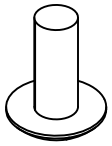

A5j - 1/4 - 20 x 0.625 Screw
(E01-0098) x4

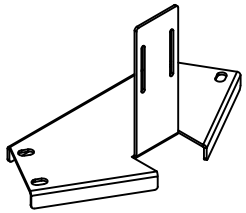

A5c - Mounting Bracket 120 HNB Power Pole
(MPA16-E042) x1

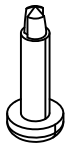

A5g - 8-18 x 0.750 Screw
(E01-0072) x2



A5k - 1/4 - 20 Nut
(E03-0254) x4

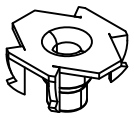

A5d - #8-32 x 7/16" 4 Prong Tee Nut
(FN8-32X7-16T4) x2

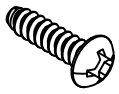

A5h - 8 x 0.625 Screw
(F58-5/8RRB) x6



A5l - Grip Washer
(FW1/4) x4

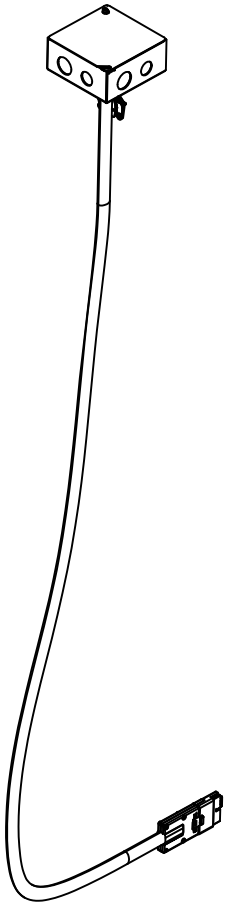

B - Navigate Ceiling Feed
(HNBECF) x1

INSTALL BRACKETS

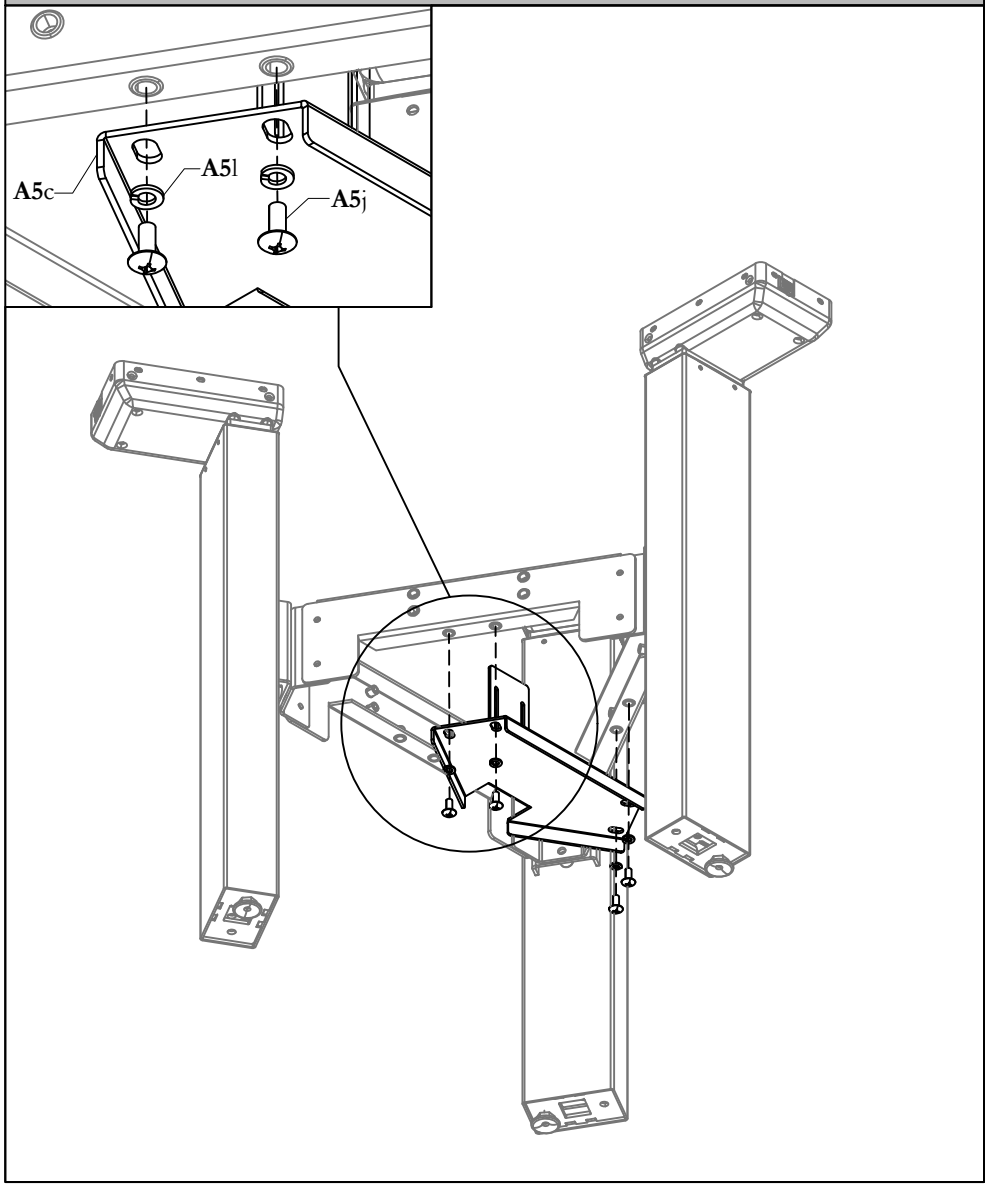

STEP 1: Install Bracket to Mid Gable Top Mounting Plate.

ATTACH LOWER EXTRUSION

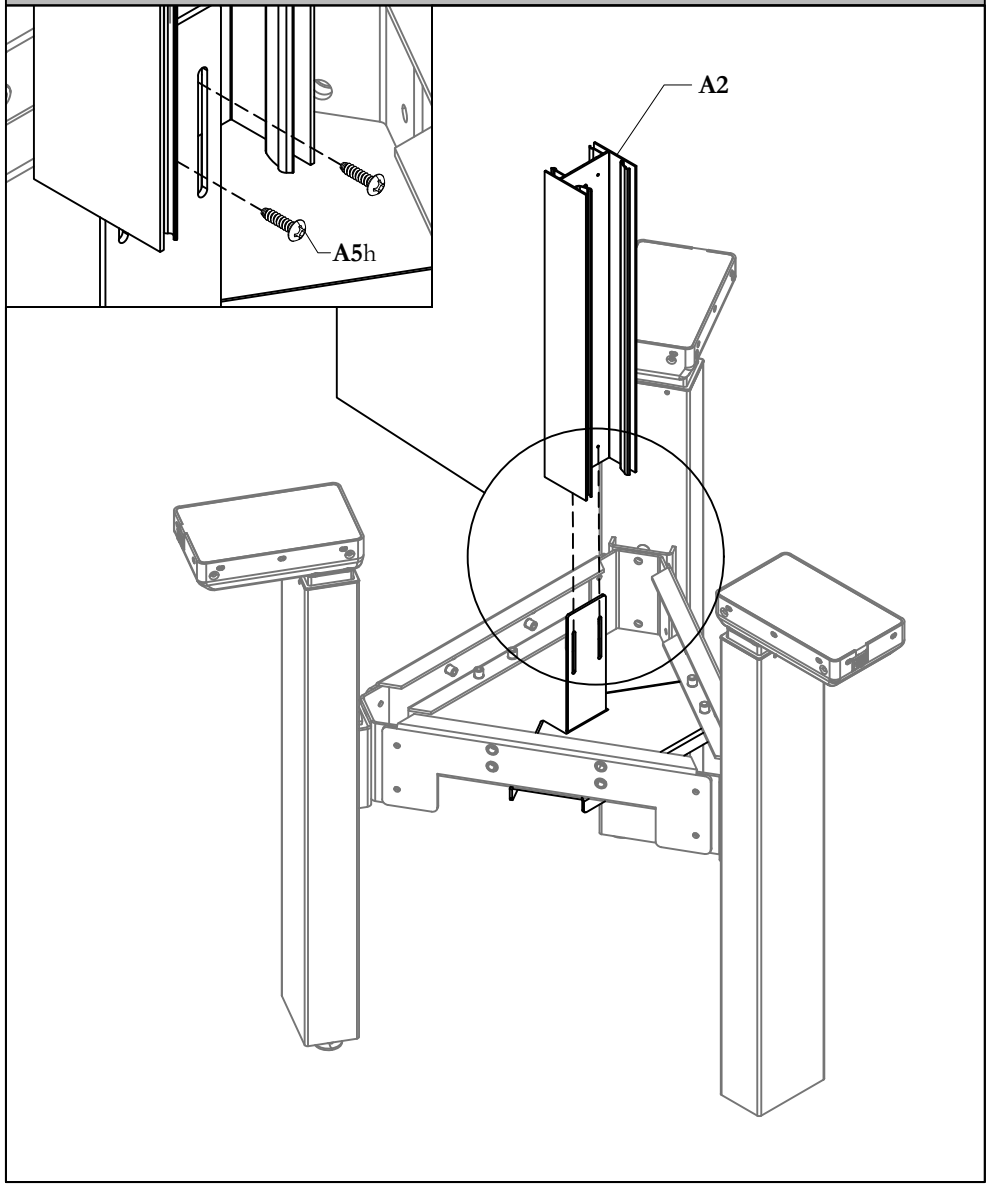

STEP 2: Align and attach Lower Power Pole to Connecting bracket as shown.

ATTACH UPPER EXTRUSION

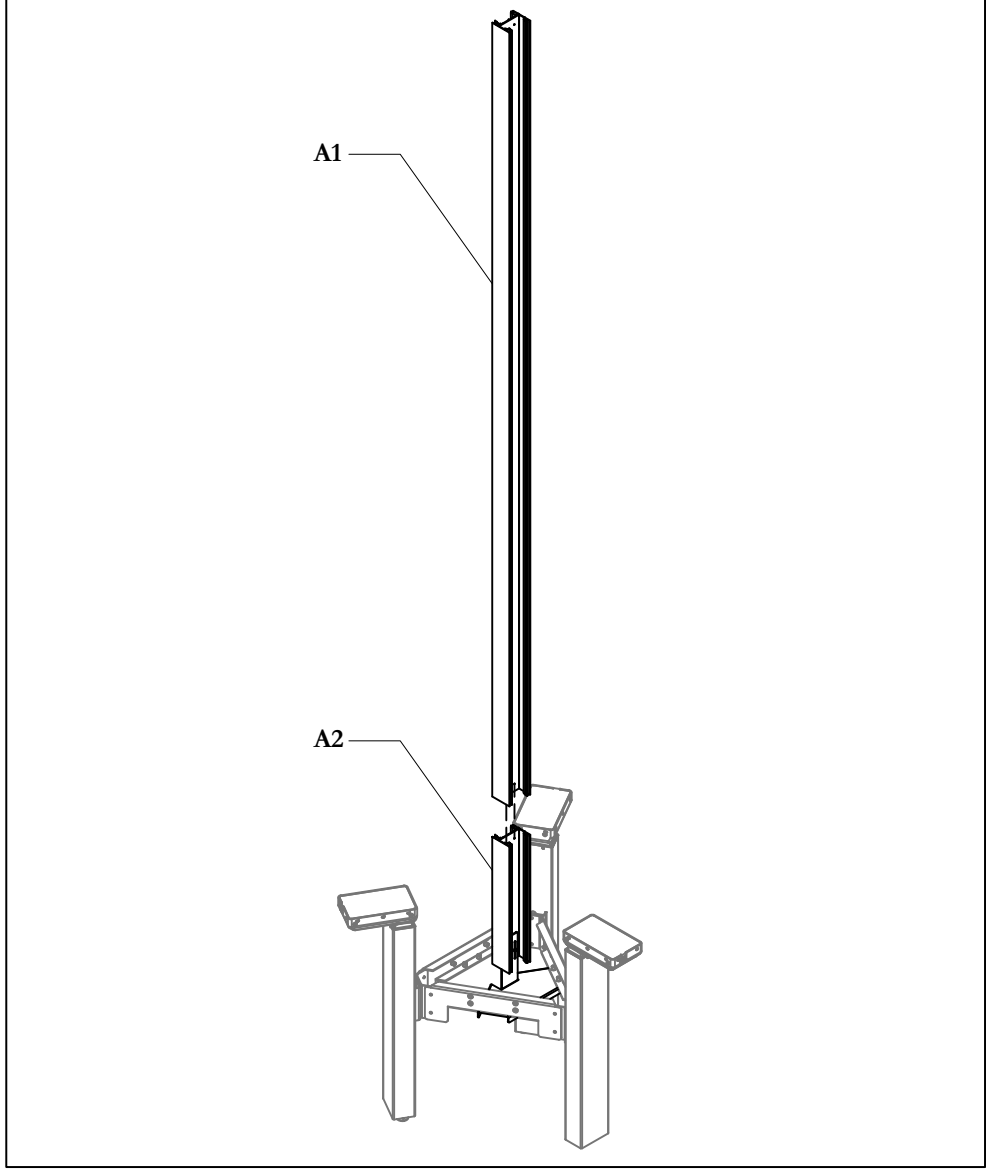

STEP 3: Insert Upper Power Pole Extrusion inside ceiling cut-out (uncut edge down). Drop Power Pol Upper Extrusion on the top of the Lower Extrusion.

FASTEN SCREWS

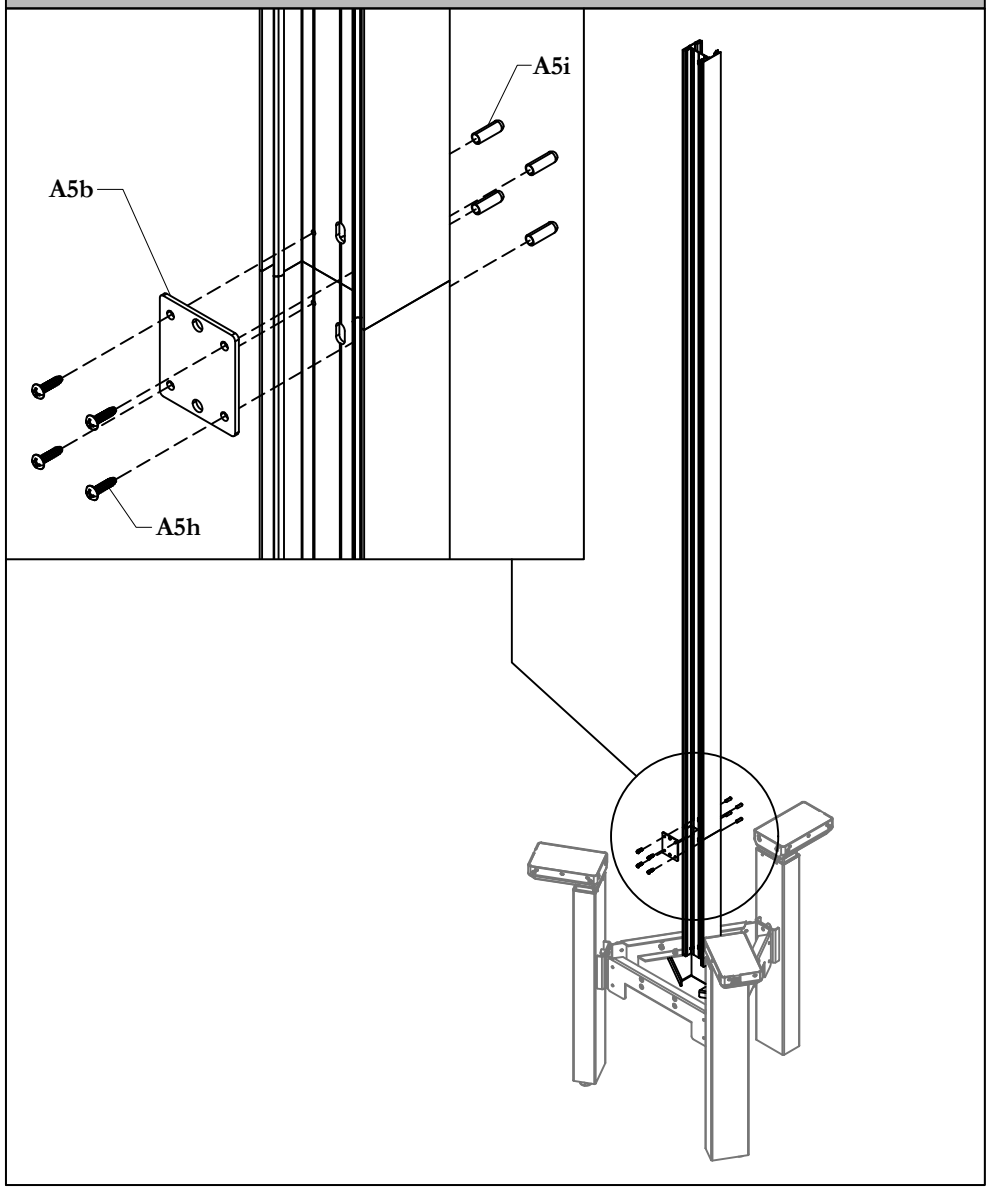

STEP 4: Connect Upper and Lower Extrusion together using Connection Plate Screws.

JUNCTION BOX INSTALLATION

NOTE: Junction Box Wire not shown.

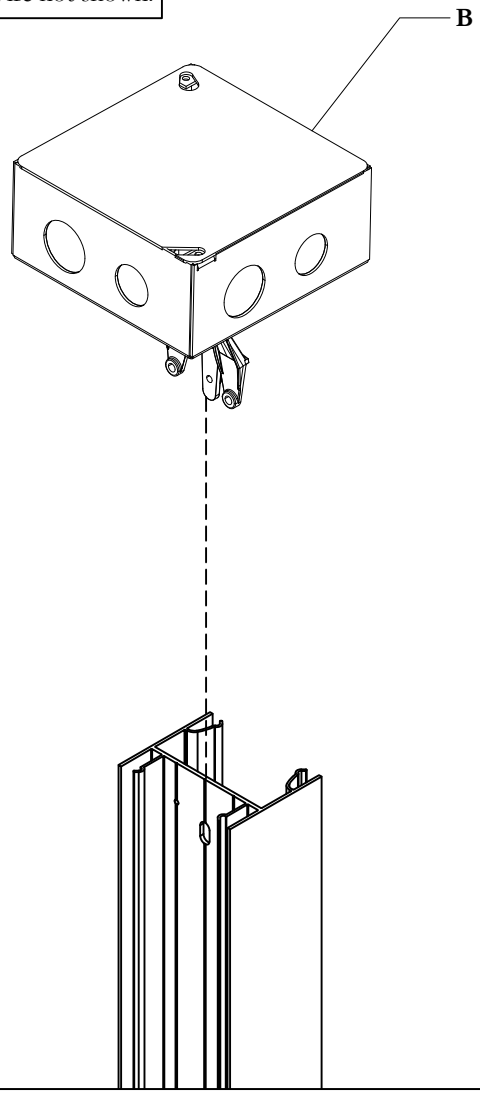

STEP 5: Slide Junction Box Bracket inside the Power Pole Extrusion.

WIRE MANAGEMENT

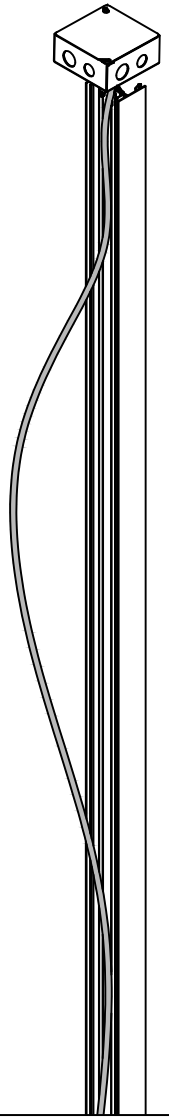

STEP 6: Drop Ceiling Feed cable down through ceiling cut-out down along the Power Pole.

ATTACH LOWER COVER

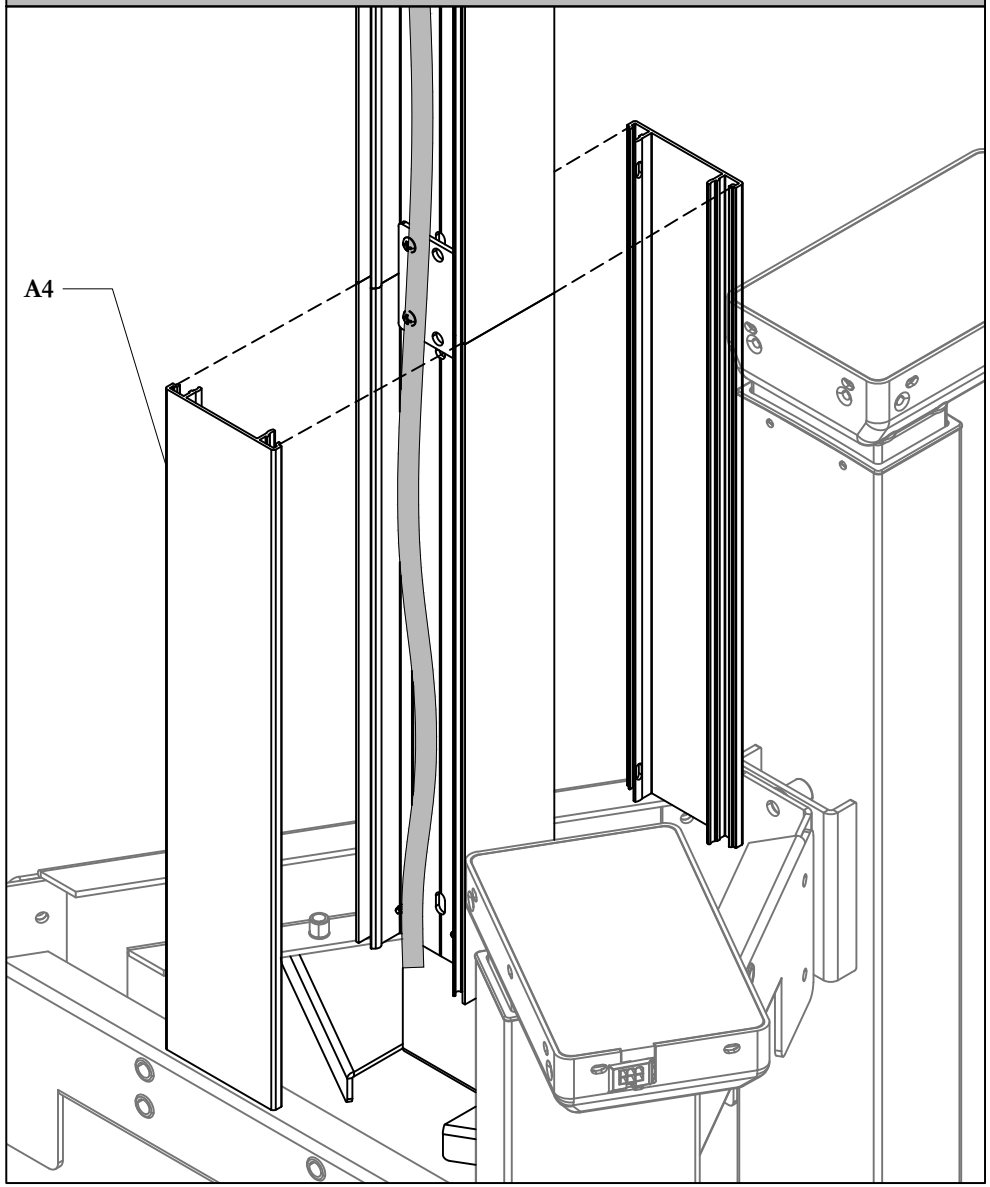

STEP 7: Tuck cable and attach Power Pole Covers by engaging them into Lower Extrusion.

ATTACH UPPER COVER

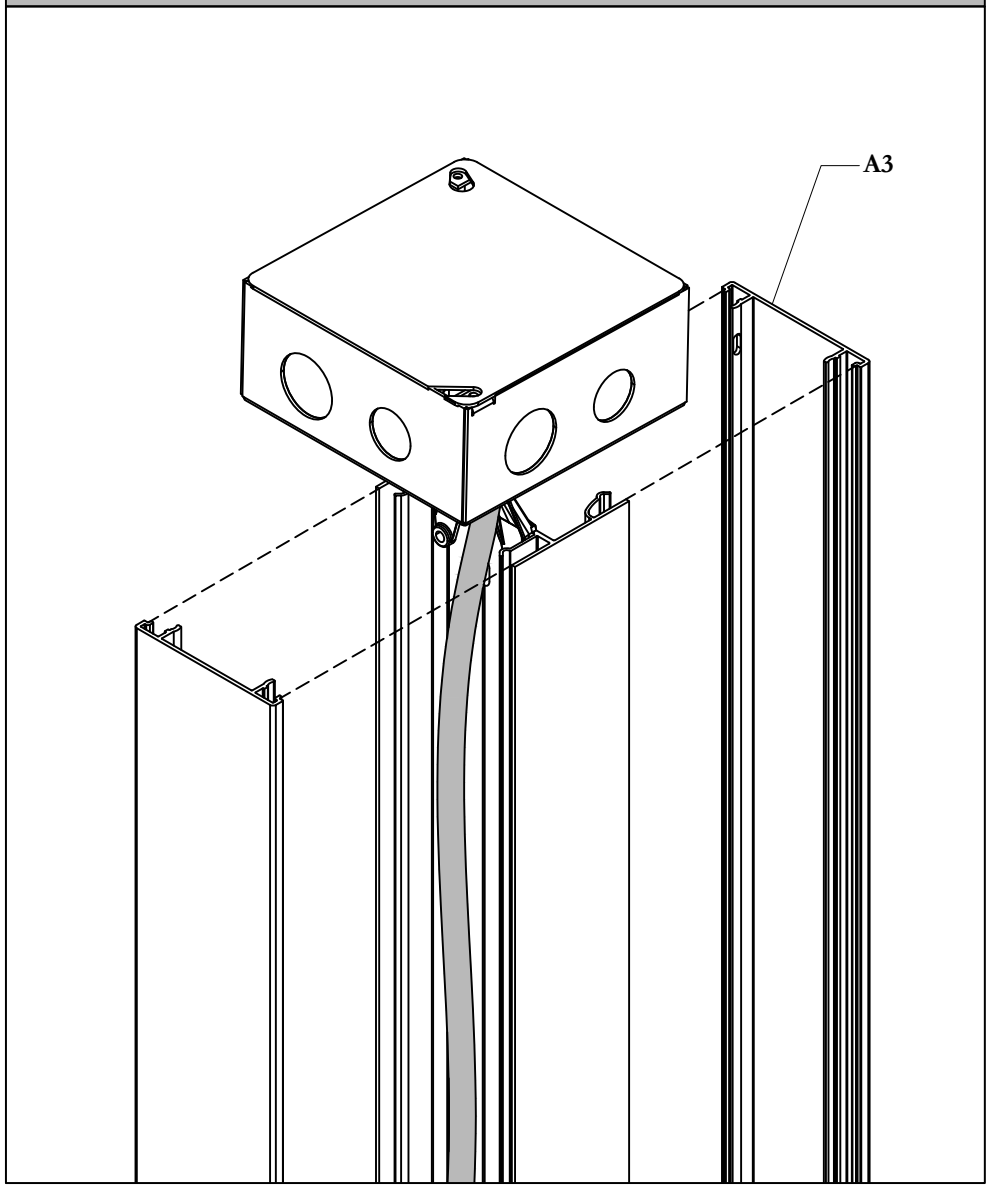

STEP 8: Insert Upper Covers inside ceiling cut-out then engage into Upper Power Pole Extrusion.

ATTACH CEILING PLATES

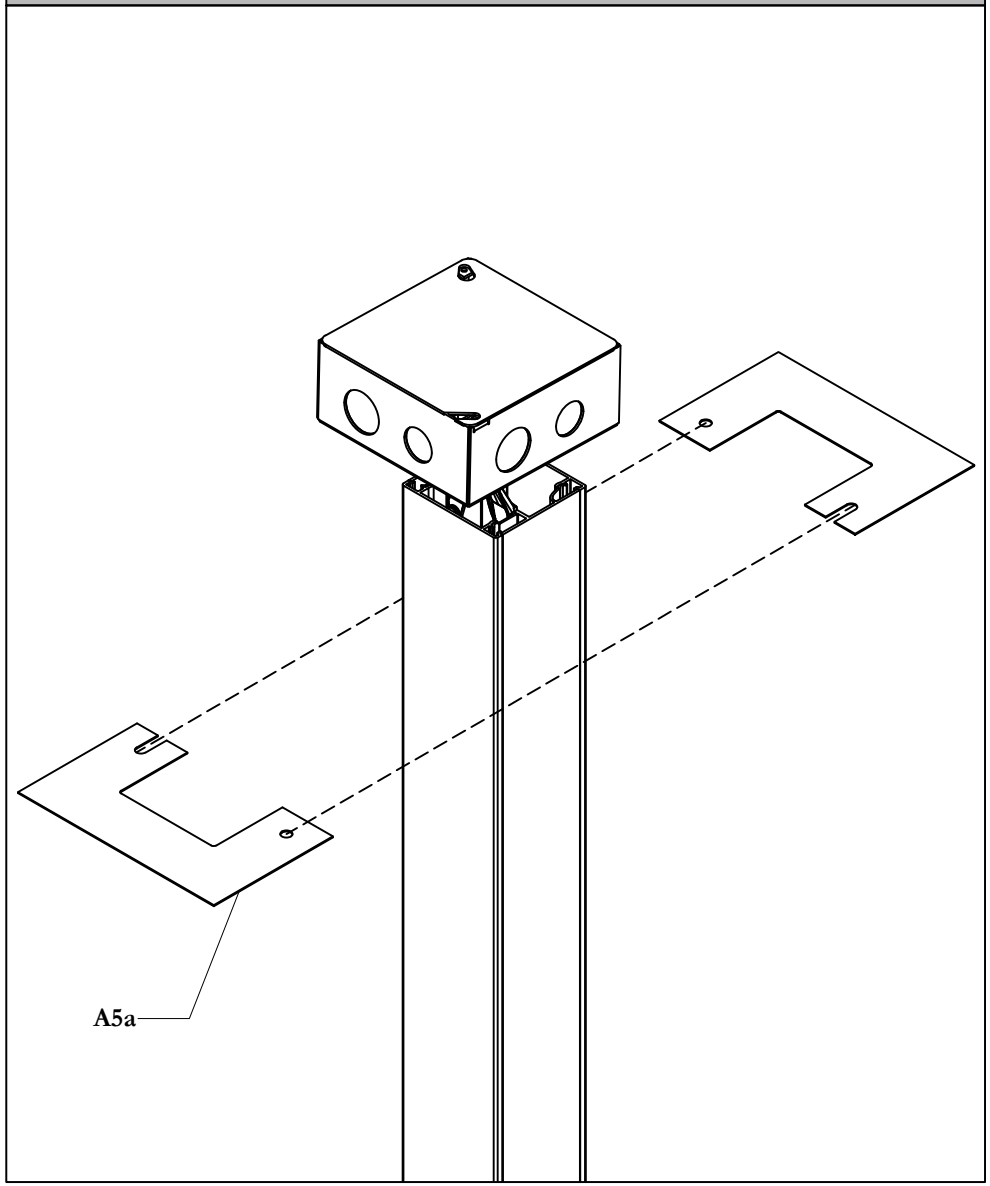

STEP 9: Attach Ceiling Plates to Power Pole under the ceiling.

FASTEN SCREWS

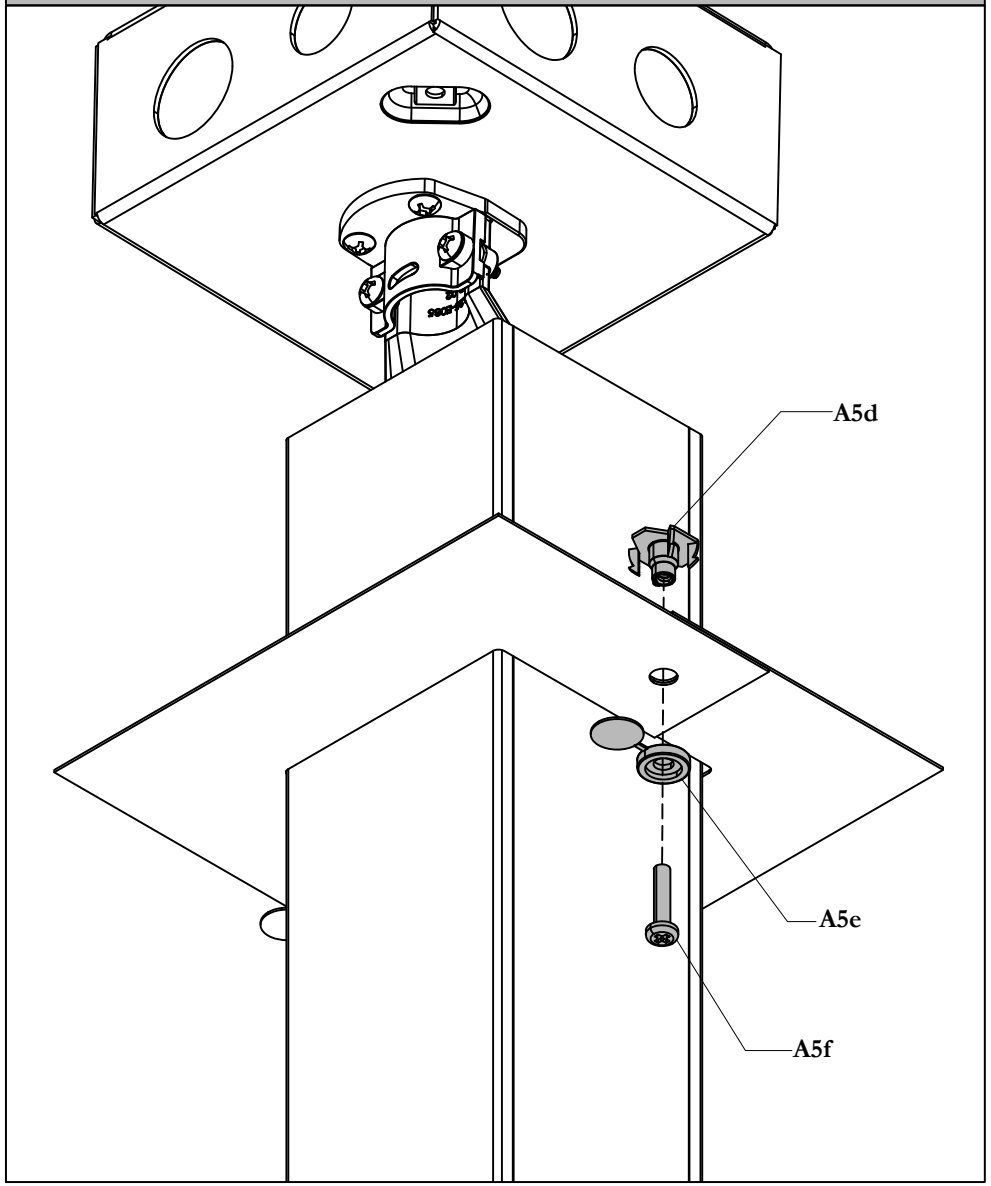

STEP 10: Push T-nuts inside holes from the top of the ceiling tile. Wrap Cover plates around the Power Pole and fasten using hardware provided.

CENTER ELECTRICAL GROMMET (HNBECEG)

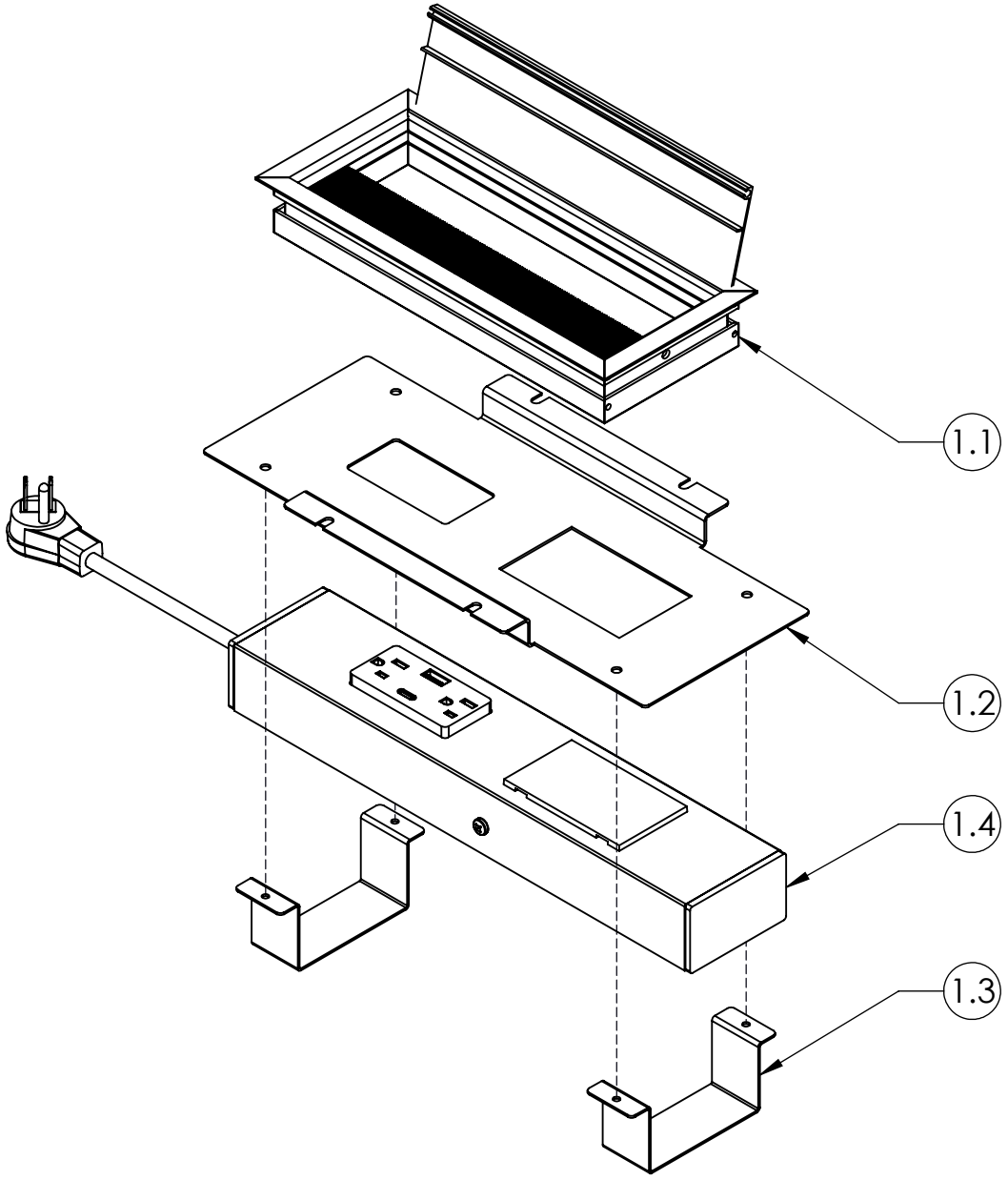

Part & Product Identification

ITEM NO.	PREVIEW	DESCRIPTION	PART NUMBER	QTY.
1. NAVIGATE CENTER ELECTRICAL GROMMET (HNBECEG)				
1.1	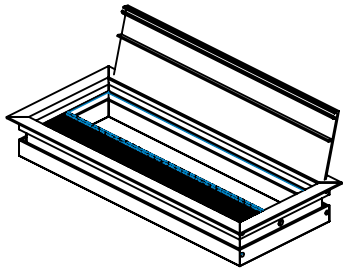	GROMMET COVER	YEAG01-RAW	1
1.2	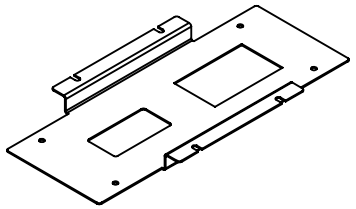	MPA15 PLATE	MPA15-E769-PD	1
1.3	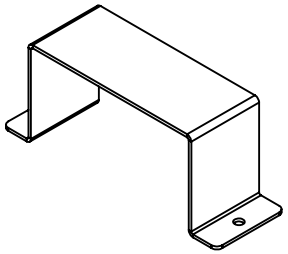	BRKT MOUNT HAB PWR BAR - 1 & 2 DUP	MPA15-E771	2

ITEM NO.	PREVIEW	DESCRIPTION	PART NUMBER	QTY.
1.4	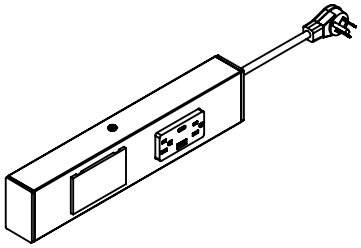	POWER MODULE	XEPB-PD-USBAC	1
1.5	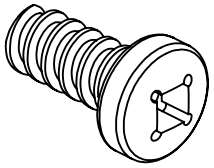	BLACK SCREW TYPE B QUAD ROUND	FS-10-16 X7-16QRB	4
1.6	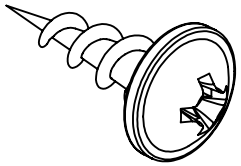	#8-1/2 PAN, QUADREX, TYPE B	FS8-5-8-PB	4

ASSEMBLE ATTACHMENTS

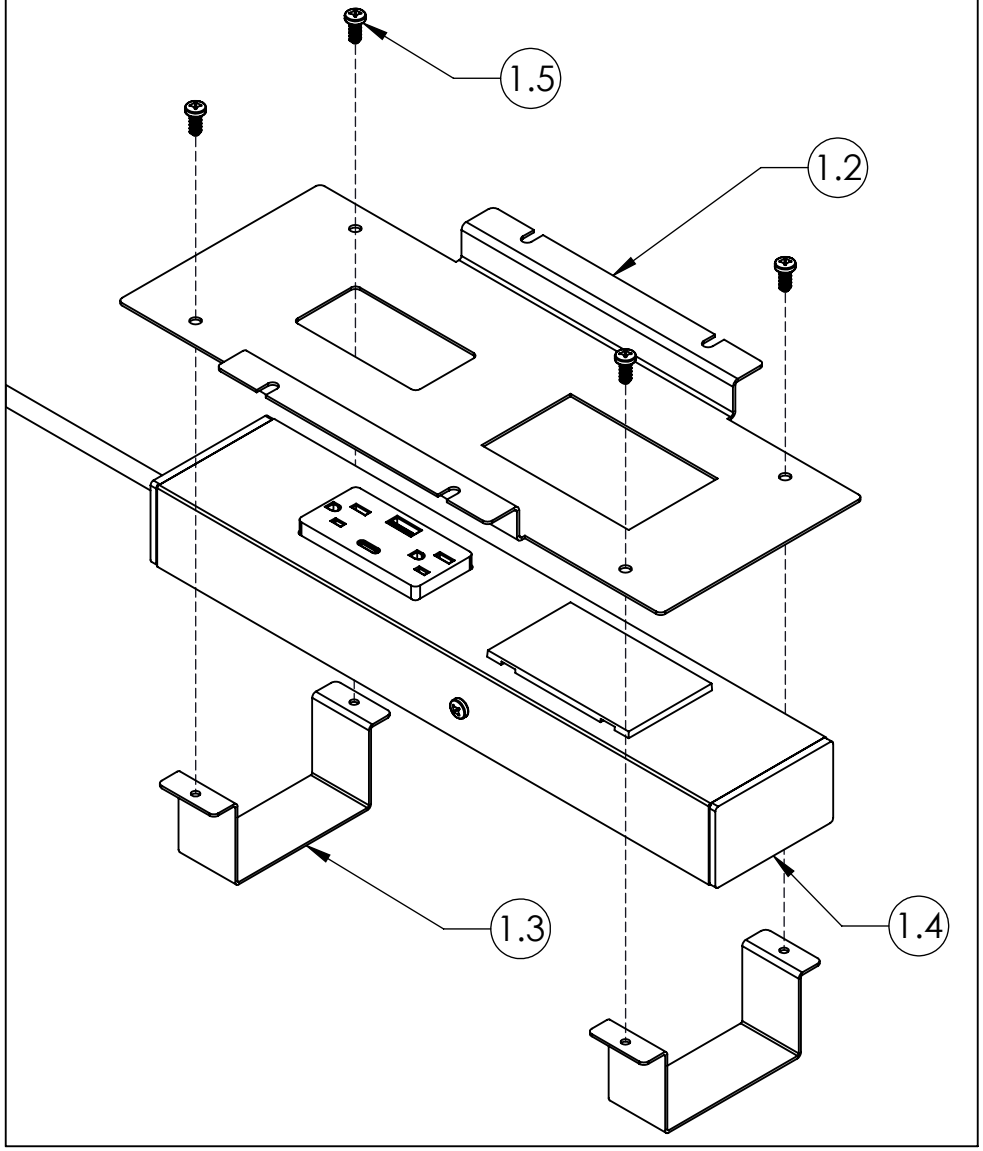

STEP 1: Assemble Plate, Bracket Mount, and Power Module with screws provided.

MOUNT POWER MODULE

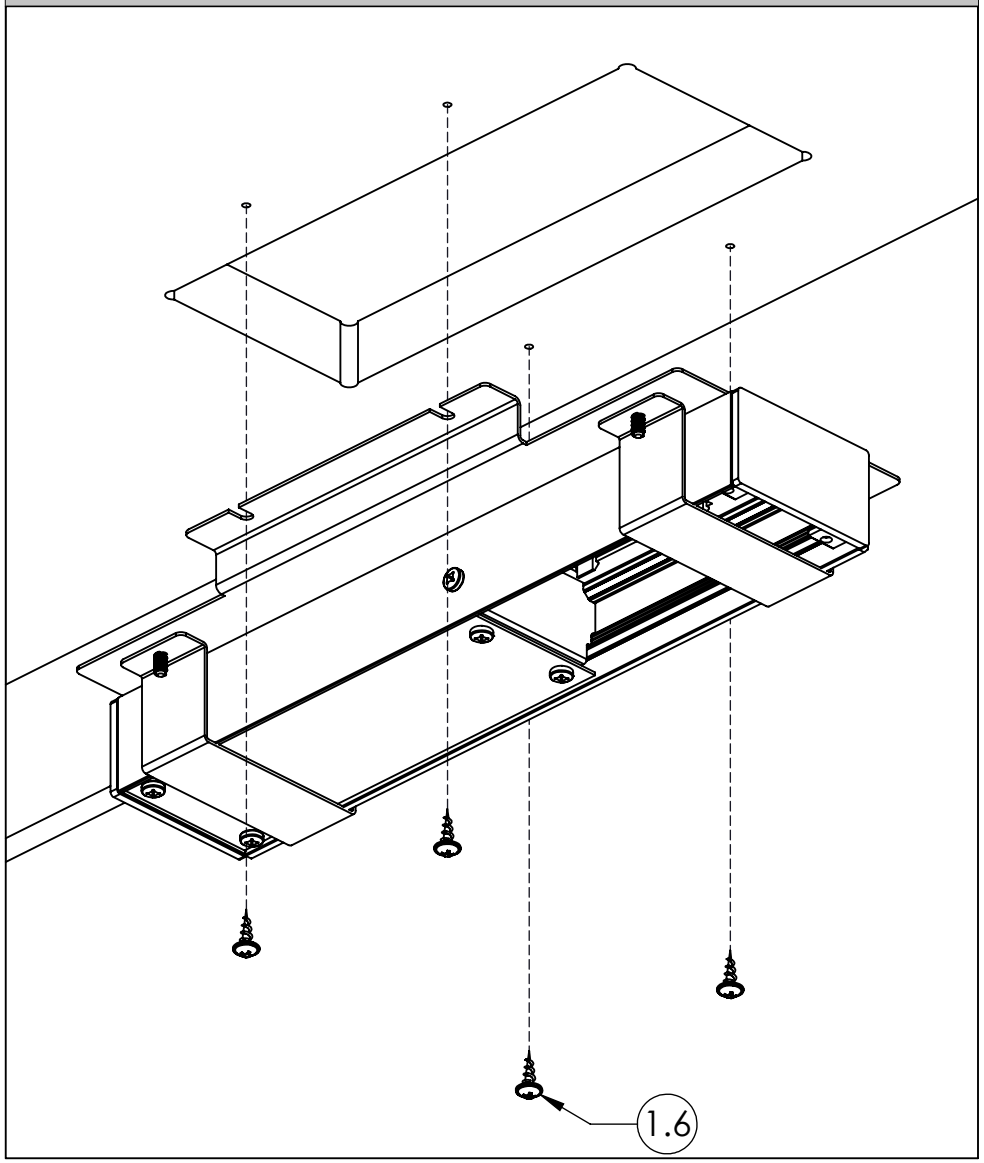

STEP 2: Mount Power Module as shown above.

PLACE GROMMET COVER

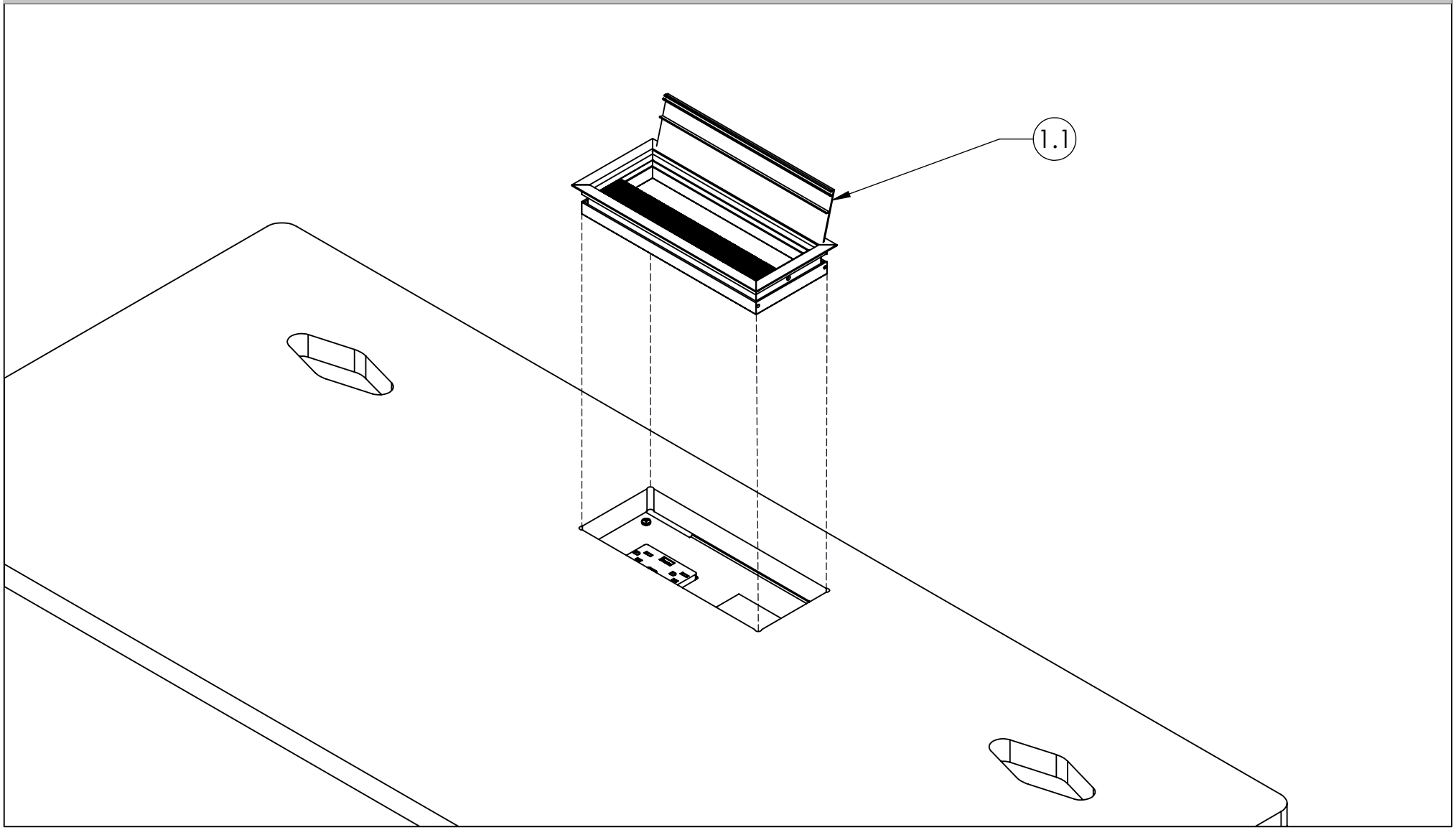

STEP 3: Place the Grommet Cover as shown above.

Navigate E-Chain Vertical Cable Manager (HNBEEE)

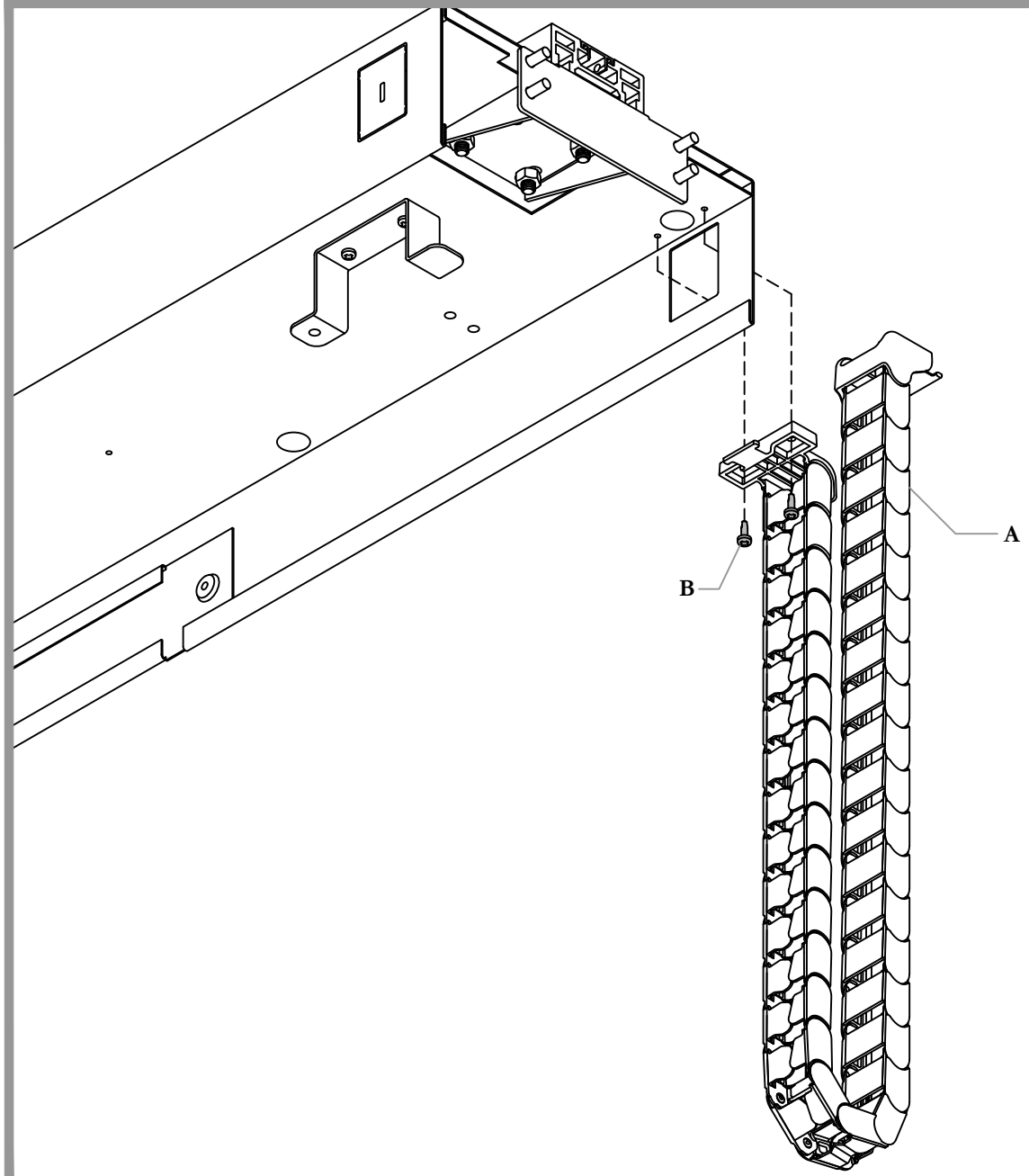

Part and Product Identification

Vertical Wire Carrier (N01-5490) x1

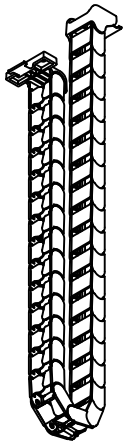

A - Vertical Wire Carrier (N01-4577-X) x1

Vertical Wire Carrier Hardware Kit (x01-3935) x1

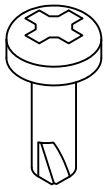

B - #8-18x1/2" Cross Square Comb. Self (E07-0012) x2

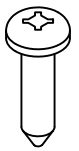

C - #12x7/8" WD Screw Pan Quad Black Oxide (E04-0087) x2

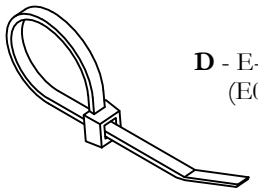

D - E-Chain Cable Tie (E02-0545) x2

REMOVE KNOCK OUTS

NOTE: There is a maximum of 4 E-Chains for HNBFCNB and 2 E-Chains for HNBFCNS

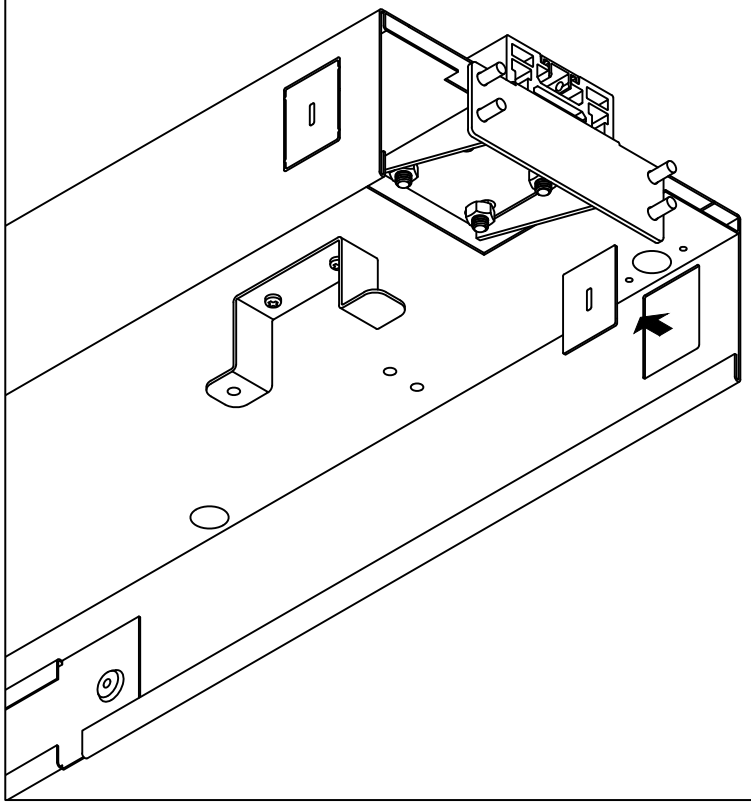

STEP 1: Remove knock outs on Wire Channel as needed.

REMOVE ENDS OF E-CHAIN

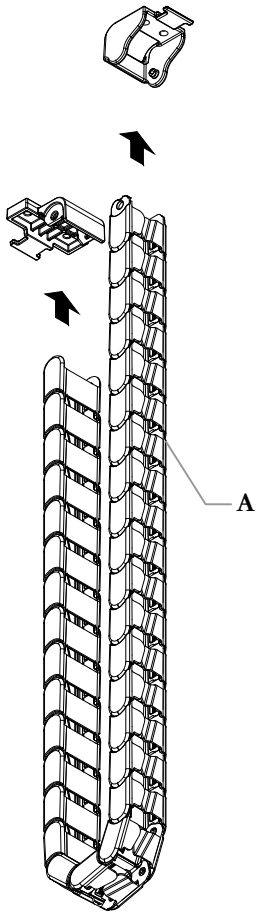

STEP 2: Remove Connector ends from the rest of the E-Chain.

INSERT CONNECTOR INTO CHANNEL SLOT

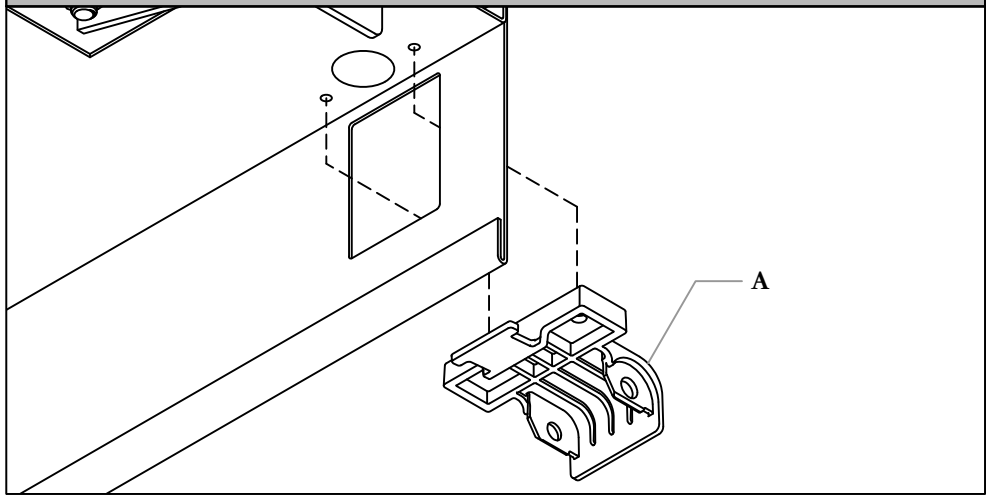

STEP 3: Install E-Chain Connector to Wire Channel by bringing the Connector through the previously made slot on the Wire Channel.

SECURE CONNECTOR TO CHANNEL

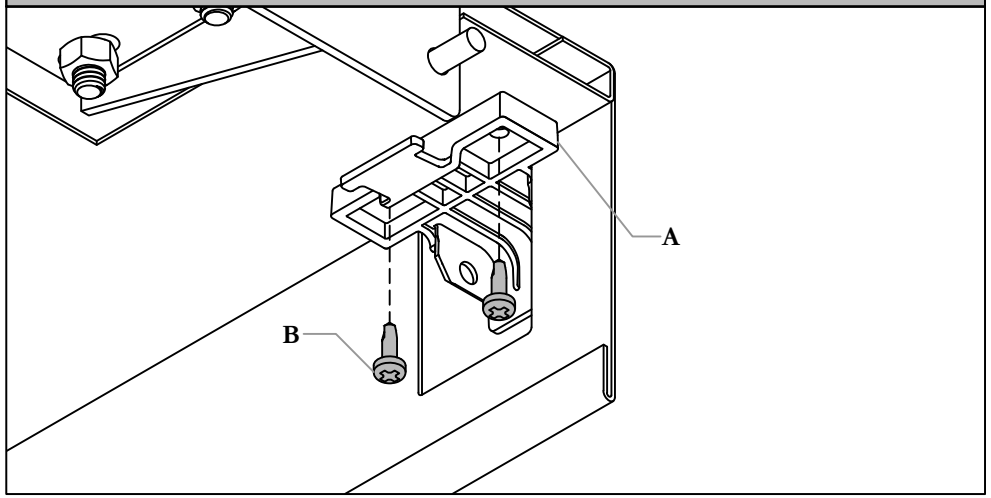

STEP 4: Secure E-Chain Connector to Wire Channel using provided Screws (B).

SECURE OTHER CONNECTOR

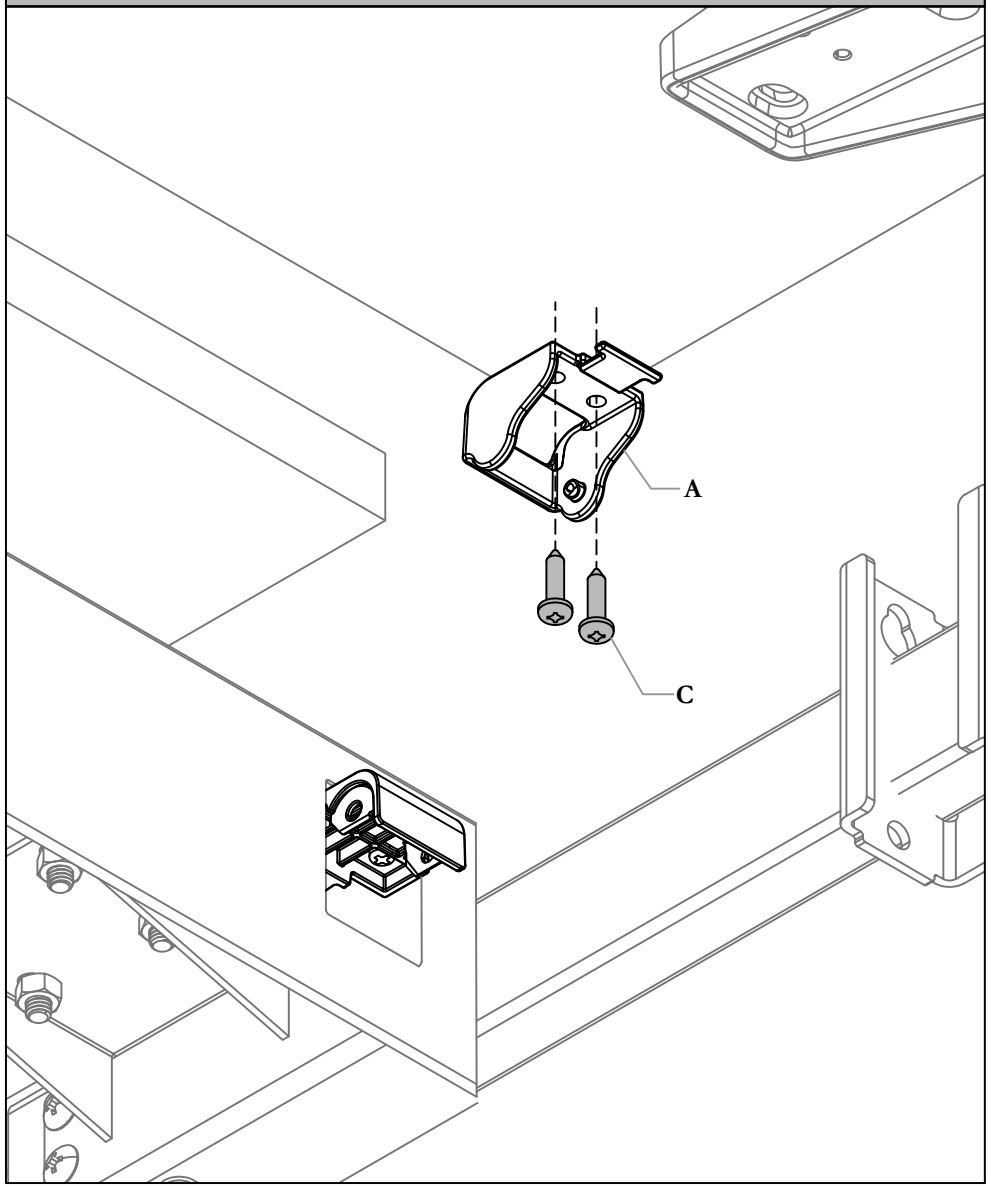

STEP 5: Secure other E-Chain Connector to the worksurface where required using provided Screws (C).

INSERT WIRE INTO E-CHAIN

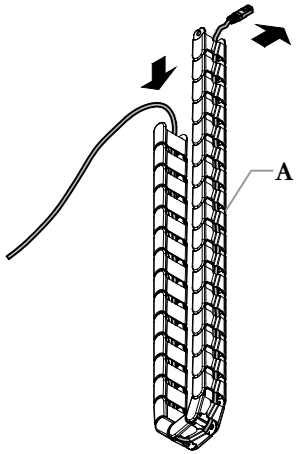

STEP 6: Insert Wire into E-Chain body, bring Wire through the E-Chain and out the other side.

REATTACH E-CHAIN TO CONNECTORS

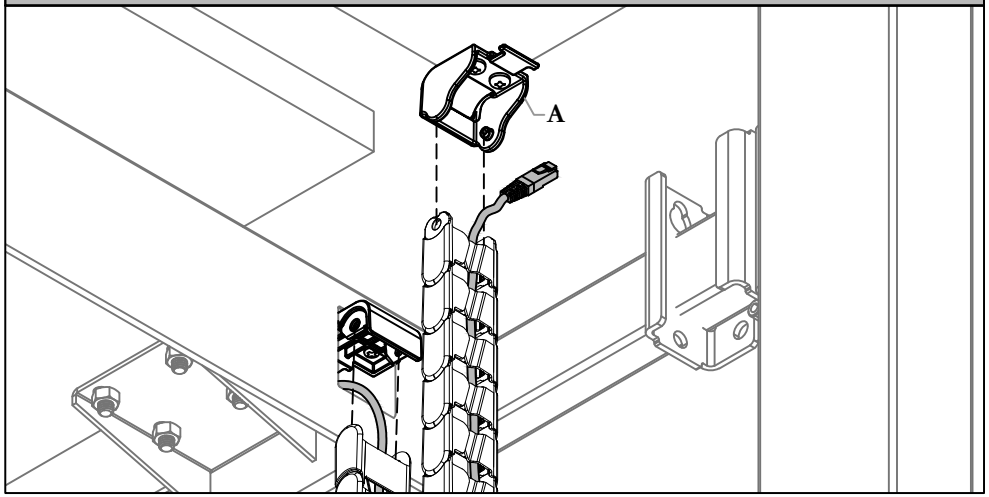

STEP 7: Reattach the body of the E-Chain to the E-Chain Connectors.

SECURE WIRE

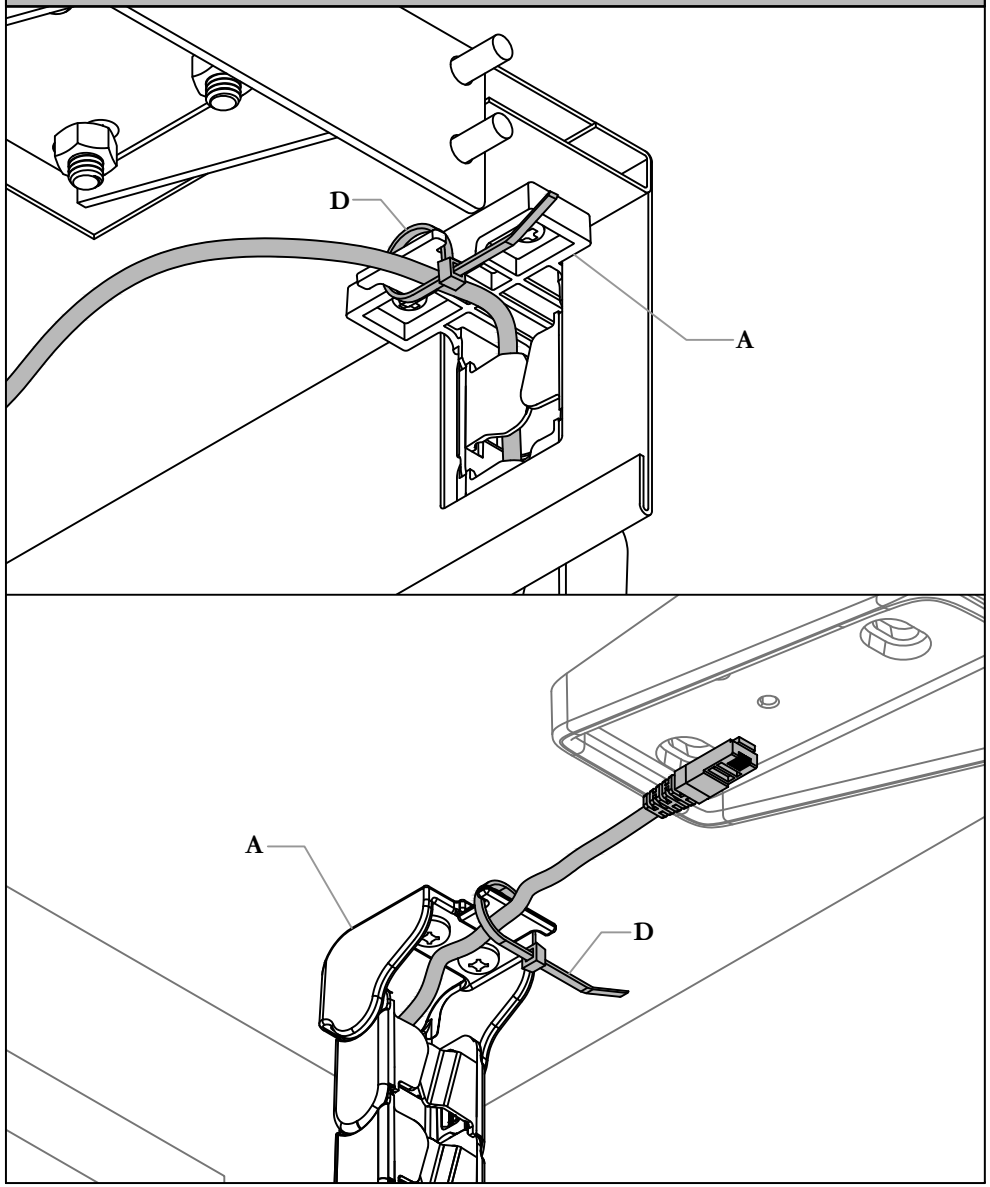

STEP 8: Secure wire on either end of E-Chain with provided Cable Ties.