

IKONstudio

Rooted in the modernist legacy of Skidmore, Owings & Merrill, the SOM Collection by IKONstudio brings together two influential expressions of 20th-century design: the disciplined corporate vision of IBM and the refined glamour of Halston. At IBM, design was embraced as a comprehensive strategy—shaping architecture, products, and identity with clarity and purpose—while Halston's Fifth Avenue interiors embodied a modernist elegance defined by sensuality, restraint, and a sense of "opulence without waste." Drawn from these parallel histories, the collection reflects a shared commitment to rigor, reduction, and material integrity.

Each piece balances rational structure with expressive form, translating iconic moments of corporate and cultural design into furnishings that feel both composed and effortless. Honoring the original vision while updating materials, proportions, and production methods, IKONstudio bridges the historical intent with modern relevance—ensuring these timeless works continue to live, function, and inspire in contemporary spaces. These pieces, reimagined for use today, don't evoke the past so much as elevate the present—adding depth, character, and a quietly expressive design intelligence to our daily lives.

SKIDMORE, OWINGS & MERRILL

The SOM collection from IKONstudio presents a selection of historically significant furniture designs created by Skidmore, Owings & Merrill. Originally conceived as extensions of architecture itself, these pieces embody the firm's modernist ethos, and are defined by material integrity and refined restraint. Since the earliest days of SOM's 90-year history, the firm has been guided by an approach called "total design," wherein the architecture, structure, and all aspects of interiors were an integrated whole. In so doing, the firm shaped the interiors of some of the world's most powerful corporations through furniture that was conceived as purely bespoke, never intended for mass production. The work that comprises this collection, conceived for the office spaces of IBM and fashion designer Halston, respectively, is part of this definitive approach to modernism that has stood the test of time and still feels important and relevant today.



SOM Original Partners



Lever House, New York, NY



John Hancock Center, Chicago, IL



Beinecke Rare Book & Manuscript Library, Yale University

IBM WORLD HEADQUARTERS, ARMONK, NEW YORK

The SOM76 collection was designed for IBM's World Headquarters in Armonk, New York—a project shaped by the company's conviction that "good design is good business." Under the guidance of Eliot Noyes, IBM had embraced modernism as a means of defining its corporate identity, commissioning SOM to create an environment that expressed clarity, innovation, and cultural seriousness. The SOM76 collection was conceived as part of that whole— furnishing the lobby with pieces that extended the architectural language of the building rather than decorating it. The collection reflects that context directly. Its forms are defined by subtle, tightly tailored curves and continuous lines— comfort achieved through proportion and precision rather than padding or excess. Fully upholstered with softened geometries, the pieces balance rationalism with presence, making them equally suited to corporate, hospitality, and residential environments. Designed to support shared environments, the SOM76 sofa provides structured seating for conversation, collaboration, and everyday use. Its scale is deliberate— balanced enough to anchor a room without dominating it, ordered enough to integrate across a range of settings.

HALSTON'S ATELIER, OLYMPIC TOWER, NY, NY

Designed by SOM's Charles Pfister in 1979 for Halston's New York atelier, the SOM79 chair captures a moment when fashion, architecture, and corporate modernism intersected. The chair's fluid lines and minimal structure reflect the understated glamour of Halston's aesthetic, while its architectural clarity allows it to adapt seamlessly to a range of environments— office, residential, or cultural—and is designed for both performance and presence. Its defining characteristic is a sense of tension—between hard and soft; structure and comfort, industrial and sensual. Its urban, almost couture, sensibility is like a sharply cut suit translated into furniture. The cantilevered steel frame defines a lean, sculptural form that emphasizes line and silhouette. Today, it stands as an enduring expression of American modernism— where architecture, fashion, and culture converge, and where engineering is resolved into ease.



IBM World Headquarters, Armonk, NY





Halston's Atelier, The Olympic Tower, New York, NY



The Olympic Tower, New York, NY

IKONstudio, founded by David Feldberg, is grounded in the belief that furniture can operate as an extension of architecture—shaped by principles of structural clarity, proportion, and material integrity. IKONstudio focuses on designs originally conceived by architects and designers whose work reflects a broader spatial language, often experimental or site-specific in origin. Through a process of careful refinement, IKONstudio adapts these works to meet contemporary expectations of comfort, performance, and scalability, while preserving the original design intent. Each piece is rebuilt with fidelity to its source—retaining essential typologies and material character while evolving production through advanced technologies and today's sustainable processes. Rather than revisiting the past, IKONstudio extends it—bringing a renewed sense of architectural presence into today's workplaces and interiors, and reinforcing the continued relevance of design as both cultural artifact and functional tool for modern life.







SOM76





Originally designed for IBM's Armonk, New York headquarters, the SOM76 collection makes a bold, modernist statement, with simple forms that convey a luxurious ease suited to lobbies, reception areas, and private offices. Available in three sizes, each piece features a tightly tailored seat and back, outlined by a distinctive, fully upholstered U-shaped frame.


HIRST





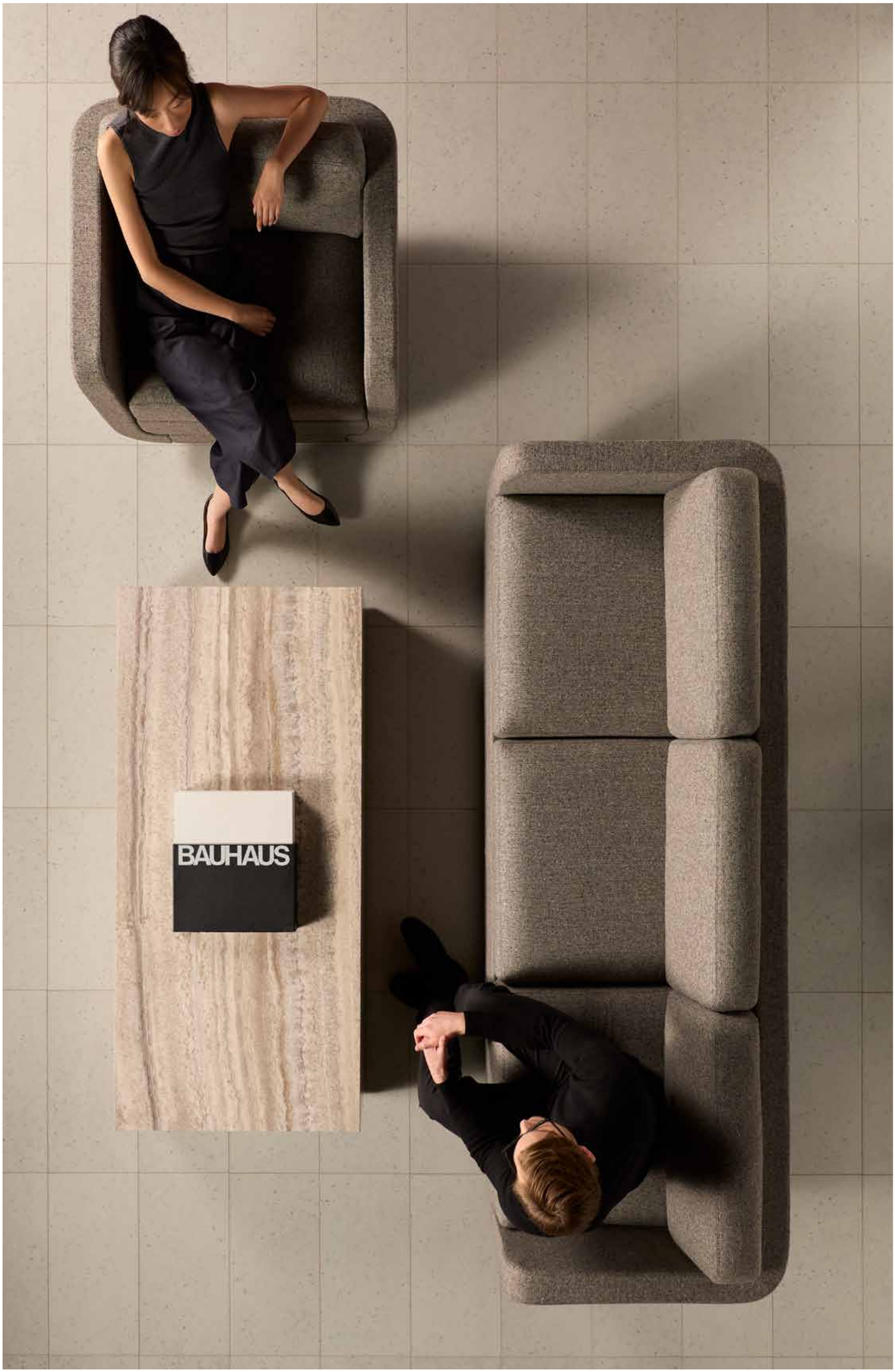
BAUHAUS

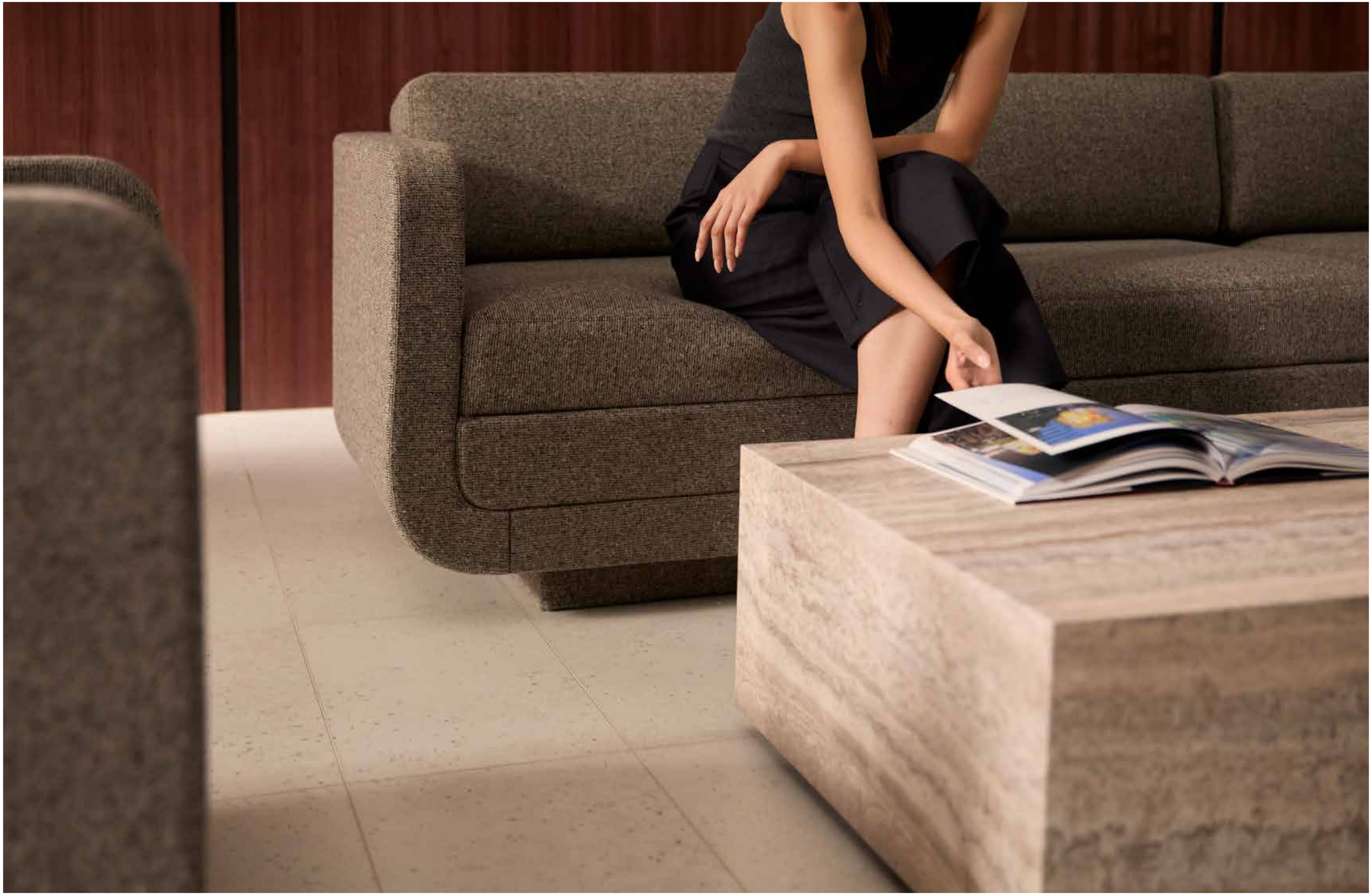


HIRST

IBM
SELECTRIC
MAR REL
SET
CLR
TAB
LOCK
SHIFT
RETURN
BACK SPACE
INDEX
ON
OFF



SOM79



Designed for Halston's suite of New York offices in the SOM-designed Olympic Tower, the SOM79 chair is defined by a lean cantilever structure that approaches minimalist sculpture in its form. At ease in any setting, this stylish, polished chair embodies the effortless glamour that Halston represents as an icon of 1970s fashion.





SOM79



The cool, clean beauty of this sleek glass table works in multiple contexts: use it as a desk, conference table, or dining table. Inspired by the SOM79 chair, designed for the offices where Halston presided over his 1970's fashion empire, the table's continuous chrome frame defines the architecture of the piece.


HALSTON


HALSTON


HALSTON
An American Original


HALSTON

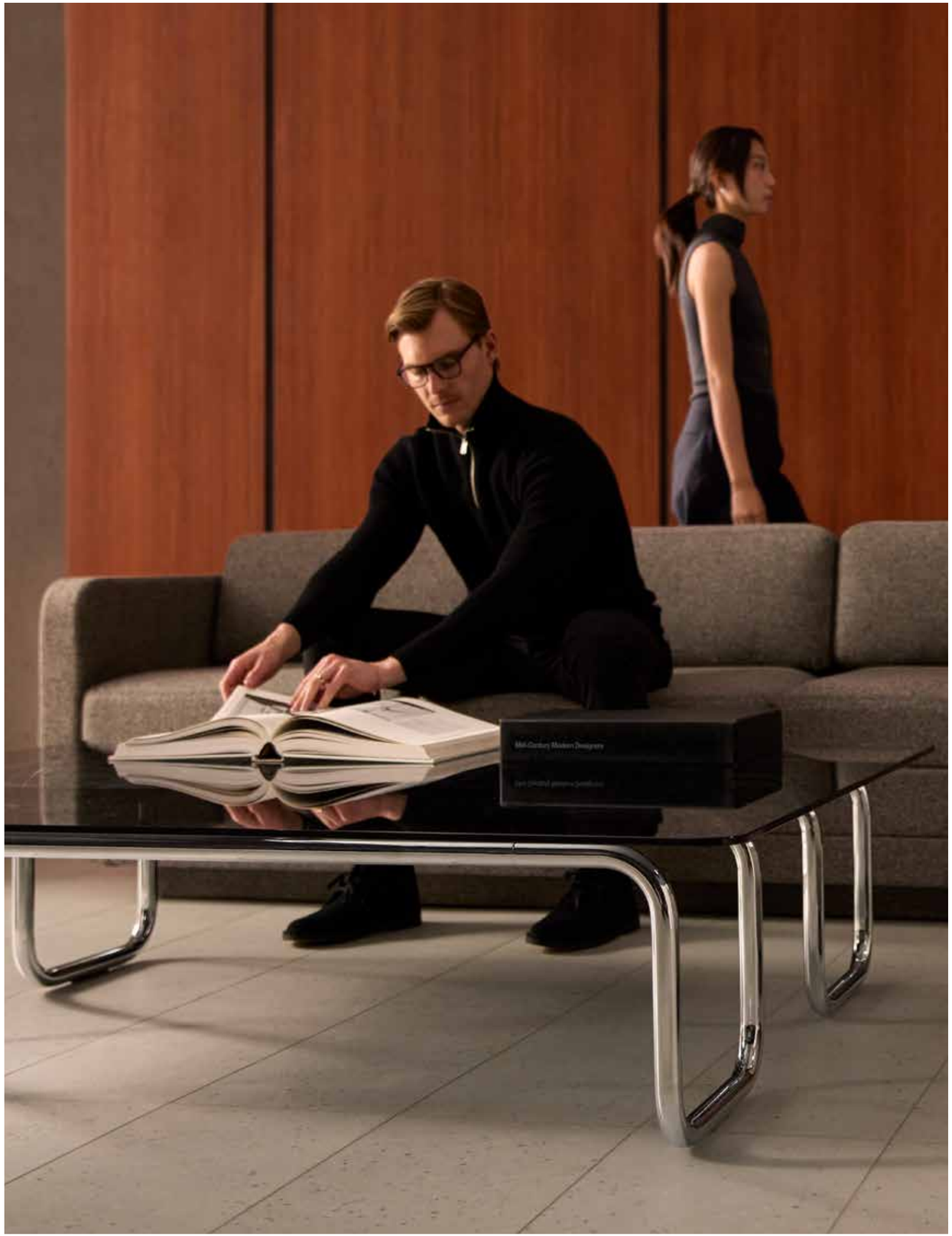

SOM79



The SOM79 table also extends into a family of scaled forms—offered in two sizes as a coffee table—each carrying forward the same continuous chrome frame derived from the original chair. Across these variations, the language remains consistent: a disciplined geometry paired with the quiet sense of glamour that defined Halston's world.



SOM79





The SOM79 side table distills the collection to its most essential expression—compact in scale, yet architectural in presence. A continuous chrome frame traces a single, fluid line beneath the glass top, creating a sense of lightness and precision. Equally suited beside a lounge chair or a sofa, it embodies the same restrained elegance and cultivated ease that characterized Halston's interiors.

SOM76 Lounge
Pages 10–11
Wool Fleck Packstone

SOM76 Lounge,
SOM76 Three-Seat
Pages 12–13
Wool Fleck Packstone

SOM76 Lounge
Pages 14–15
Wool Fleck Packstone

SOM76 Lounge,
SOM76 Three-Seat
Pages 16–17
Wool Fleck Packstone

SOM76 Two-Seat,
SOM67 Three-Seat
Pages 18–19
Wool Fleck Packstone

SOM76 Lounge,
SOM76 Two-Seat,
SOM67 Three-Seat
Pages 20–21
Wool Fleck Packstone

SOM76 Lounge
Page 23
Wool Fleck Packstone

SOM79 Chair
Pages 24–25
Pela Leather Carbon

SOM79 Chair
Pages 26–27
Pela Leather Carbon

SOM79 Chair
Pages 28–29
Pela Leather Platinum

SOM79 Table
Pages 30–31
Chrome Legs
Solar Gray Glass Top

SOM79 Chair
Pages 32–33
Pela Leather, Carbon

SOM79 Table
Pages 32–33
Chrome Legs
Solar Gray Glass Top

SOM79 Table
Page 35
Chrome Legs
Solar Gray Glass Top

SOM79 Chair
Pages 36–37
Pela Leather, Carbon

SOM79 Table
Pages 36–37
Chrome Legs
Solar Gray Glass Top

SOM79 Chair
Pages 38–39
Pela Leather, Carbon

SOM79 Table
Pages 38–39
Chrome Legs
Solar Gray Glass Top

SOM76 Three-Seat
Pages 40–41
Wool Fleck Packstone

SOM79 Table
Pages 40–41
Chrome Legs
Solar Gray Glass Top

SOM76 Lounge,
SOM76 Three-Seat
Pages 42–43
Wool Fleck Packstone

SOM79 Coffee Table
Pages 42–43
Chrome Legs
Solar Gray Glass Top

SOM76 Lounge
Pages 44–45
Wool Fleck Coquina

SOM79 Side Table
Pages 44–45
Chrome Legs
Solar Gray Glass Top

SOM76 Seating

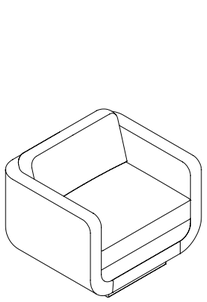

Lounge

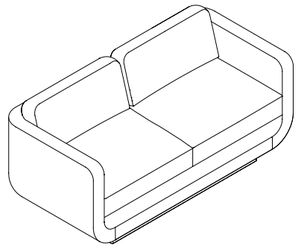

Two-Seat

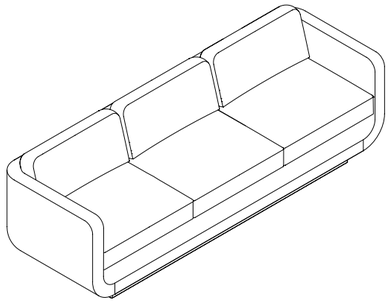

Three-Seat

SOM79 Chair

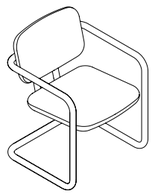

SOM79 Tables



Side Table

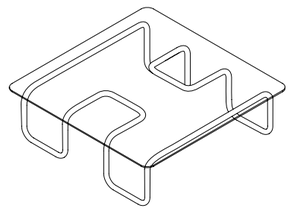

Coffee Table

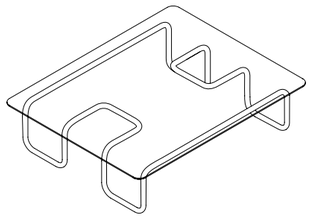

Coffee Table

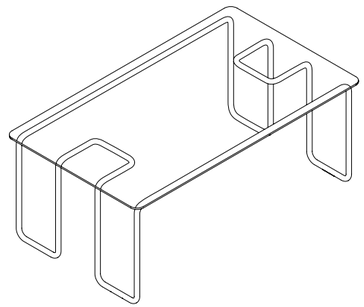

Table

IKONstudio

ikonstudio.co | @ikonstudio_

IKONstudio